(12) INTERNATIONAL APPLICATION PUBLISHED UNDER THE PATENT COOPERATION TREATY (PCT)

(19) World Intellectual Property Organization
International Bureau

(43) International Publication Date
10 April 2014 (10.04.2014)

WIPO | PCT

(10) International Publication Number
WO 2014/054945 A2

(51) International Patent Classification:
F25J 3/02 (2006.01) *C10L 3/10* (2006.01)

(21) International Application Number:
PCT/NL2013/050698

(22) International Filing Date:
1 October 2013 (01.10.2013)

(25) Filing Language: English

(26) Publication Language: English

(30) Priority Data:
12186850.9 1 October 2012 (01.10.2012) EP

(71) Applicant: **STAMICARBON B.V. ACTING UNDER THE NAME OF MT INNOVATION CENTER** [NL/NL]; Mercator 3, NL-6135 KW Sittard (NL).

(72) Inventor; and
(71) Applicant : **PELLEGRINI, Laura Annamaria** [IT/IT]; via Solferino, 1, I-24022 Alzano Lombardo (BG) (IT).

(74) Agent: **JANSEN, C.M.**; V.O., Johan de Wittlaan 7, NL-2517 JR Den Haag (NL).

(81) Designated States *(unless otherwise indicated, for every kind of national protection available)*: AE, AG, AL, AM, AO, AT, AU, AZ, BA, BB, BG, BH, BN, BR, BW, BY, BZ, CA, CH, CL, CN, CO, CR, CU, CZ, DE, DK, DM, DO, DZ, EC, EE, EG, ES, FI, GB, GD, GE, GH, GM, GT, HN, HR, HU, ID, IL, IN, IS, JP, KE, KG, KN, KP, KR, KZ, LA, LC, LK, LR, LS, LT, LU, LY, MA, MD, ME, MG, MK, MN, MW, MX, MY, MZ, NA, NG, NI, NO, NZ, OM, PA, PE, PG, PH, PL, PT, QA, RO, RS, RU, RW, SA, SC, SD, SE, SG, SK, SL, SM, ST, SV, SY, TH, TJ, TM, TN, TR, TT, TZ, UA, UG, US, UZ, VC, VN, ZA, ZM, ZW.

(84) Designated States *(unless otherwise indicated, for every kind of regional protection available)*: ARIPO (BW, GH, GM, KE, LR, LS, MW, MZ, NA, RW, SD, SL, SZ, TZ, UG, ZM, ZW), Eurasian (AM, AZ, BY, KG, KZ, RU, TJ, TM), European (AL, AT, BE, BG, CH, CY, CZ, DE, DK, EE, ES, FI, FR, GB, GR, HR, HU, IE, IS, IT, LT, LU, LV, MC, MK, MT, NL, NO, PL, PT, RO, RS, SE, SI, SK, SM, TR), OAPI (BF, BJ, CF, CG, CI, CM, GA, GN, GQ, GW, KM, ML, MR, NE, SN, TD, TG).

Declarations under Rule 4.17:

— *as to applicant's entitlement to apply for and be granted a patent (Rule 4.17(ii))*

— *as to the applicant's entitlement to claim the priority of the earlier application (Rule 4.17(iii))*

— *of inventorship (Rule 4.17(iv))*

Published:

— *without international search report and to be republished upon receipt of that report (Rule 48.2(g))*

(54) Title: PROCESS FOR THE REMOVAL OF CO2 FROM ACID GAS

(57) Abstract: The invention relates to a process for the removal of CO_2 from acid gas by cryogenic distillation performed in two steps. The feed mixture is first distilled at high pressure (at least 45 bar) in a first distillation column. The top product or a part there - of is then, after heating, subjected to a second distillation step at a lower pressure (lower than 45 bar). The top product of the second distillation step is methane of high purity (more than 99 mol.%). The bottom product of the second distillation step is recycled back to the first distillation column. The method according to the invention allows complete separation of methane also at higher level of acidic components, is economical and does not result in solid CO_2 build-up, which is a common problem in cryogenic distillation.

WO 2014/054945 A2

Title: Process for the removal of CO_2 from acid gas

Field of the invention

The invention relates to the field of purification of acid gas and in particular to the removal of carbon dioxide from acid gas by cryogenic distillation.

Background of the invention

The invention addresses the problem of the removal of carbon dioxide from its mixtures with methane such as acid gas. Acid gas is natural gas containing acidic gas components such as carbon dioxide (CO_2) and hydrogen sulphide (H_2S).

About 40% of the world natural gas reservoirs contain significant concentrations of carbon dioxide and hydrogen sulphide. Such acid gas fields are found in Europe, Africa, North and South America and the Far East; the Middle East and Central Asia hold the largest volumes. In order to efficiently use the hydrocarbons from acid gas, the acidic components CO_2 and H_2S need to be removed. In the last years the efforts for the development of new technologies that can make the exploitation of these reserves economically convenient are increased. At the same time, international and local environmental regulations push towards an increasing limitation of the CO_2 emissions to the atmosphere.

For the exploitation of an acid gas field, the key economic driver is the cost to separate and recover the acid gas components (CO_2, H_2S). The traditional chemical separation of CO_2 and H_2S with amines is not competitive when the stream contains high quantity of acidic components because this involves high costs proportional to the quantity of the

components to be removed. Another problem is that in the known separation processes components CO_2 and H_2S are separated as low pressure vapours, therefore leading to high recompression costs for re-injection.

In the prior art cryogenic processes are known and used for the separation of carbon dioxide from methane in an acid gas. A problem during cryogenic distillation is however the build-up of solid carbon dioxide inside the distillation column. In the prior art, two cryogenic processes are known and currently used in industrial applications wherein the build-up is avoided. These are the Ryan Holmes process described in US4318723 and the CFZ (Controlled Freeze Zone) process described in US4533372.

In the Ryan Holmes process the build-up of solid carbon dioxide is addressed by adding to the natural gas a third component (usually a C3-C6 hydrocarbon) that prevents the carbon dioxide solidification inside the distillation column. Therefore this added component has to be separated from the bottom product of the cryogenic distillation in a regeneration unit. The addition of a third component (to be added and separated) leads to an increase of investment costs (CAPEX) and operating costs (OPEX).

The CFZ process is based on a complex cryogenic distillation column. Carbon dioxide solidification is allowed in a specific zone of the column, the controlled freeze zone, where the deposited solid CO_2 has to be molten and extracted. The process requires an ad-hoc designed column. The use of a complex solid-liquid separation column, with an ad-hoc design, leads to an increase of CAPEX and OPEX costs.

Other processes are described, for example, in US4284423 which is a process for the separation of CO_2 from methane by distillation wherein the gas mixture is fed first to a low pressure column and subsequently to a high pressure column. The stream from the low pressure column needs to be compressed and cooled before entering the high pressure column. After reproduction of the exemplified processes with commercial process simulators, it is found that this process leads to the formation of solid CO_2.

DE2622662 discloses a distillation process for the separation of CO_2 from methane wherein the top product from a high-pressure distillation column is cooled and completely condensed and subsequently fed to a second column operating at a lower pressure. Reproduction of the exemplified processes with commercial process simulators shows that the simulation of this process does not reach convergence.

It is therefore desirable to provide a process for the removal of CO_2 from acid gas which would not have the above-mentioned drawbacks. In particular, the process should achieve complete separation of methane also at a high level of acidic components, avoid solid CO_2 precipitation and moreover be economical.

Summary of the invention

In order to better address one or more of the foregoing desires, the invention presents, in one aspect, a process for the removal of CO_2 from a feed mixture comprising methane and CO_2, the process comprising:

(a) subjecting the feed mixture to a first distillation step in a first distillation column or a first section of a distillation column, at a pressure of at least 45 bar, yielding after distillation a first bottom product stream comprising CO_2 and a first top product stream comprising CO_2 and methane,

(b) heating said first top product stream or a part of said first top product stream to yield a heated first top product stream respectively a heated part of said first top product stream, wherein heating is done to a temperature higher than the dew point of the stream at the pressure of the subsequent second distillation step,

(c) subjecting the heated first top product stream or the heated part of said first top product stream, respectively, to a second distillation step in a second distillation column or a second section of the distillation

column, at a pressure lower than 45 bar, yielding thereby a second top product stream comprising methane and a second bottom product stream,

(d) feeding said second bottom product stream to said first distillation column or said first section of the distillation column.

Brief description of the drawings

Figure 1 shows a process scheme for an embodiment according to the invention. Figure 2 shows a process scheme for en embodiment according to the invention, wherein the first top product stream is splitted. Figure 3 shows a process scheme for an embodiment according to the invention, with three columns.

Detailed description of the invention

The present invention relates to a cryogenic distillation process wherein use is made of a loop process including two distillation steps at a different pressure with an intermediate heating step. In the first step a feed mixture is distilled at a predetermined high pressure and, after heating of at least a part of it, the resulting top stream is distilled at a predetermined low pressure. This process yields a substantially pure stream of methane as a top stream, while the bottom stream comprising CO_2 and other components is recycled back to the first distillation step. Since methane is obtained as a pure stream, the method of the invention is also a method for the separation, or purification, of methane from its mixtures with CO_2.

In the method of the invention, a feed mixture comprising CO_2 and methane is provided. There is no particular limit on the content of CO_2 that may be present and the present method can treat gas mixtures with high amounts of CO_2. In a preferred embodiment, the feed mixture is acid gas, that is, natural gas containing acidic components CO_2 and H_2S.

Depending on the origin, the acid gas can contain up to 80 mol.% CO_2 and different amounts of H_2S. Apart from acidic components and methane, acid gas may contain small amounts of higher hydrocarbons, such as ethane and propane. The amount of hydrogen sulphide and hydrocarbons in the feed mixture is not considered critical since these components do not cause the problem of solidification. In another embodiment, the feed mixture can be biogas. Biogas refers to a gas obtained by breakdown of organic matter in the absence of oxygen and mainly contains methane and CO_2.

In step (a) the feed mixture is subjected to a first distillation step in a first distillation column or a first section of a distillation column, at a pressure of at least 45 bar, yielding after distillation a first bottom product stream comprising CO_2 and a first top product stream comprising CO_2 and methane. The first, high pressure distillation step is performed at a pressure such that solid carbon dioxide does not form in the upper part of the section. Preferably, the pressure during the first distillation step is in the range 45-55 bar, typically around 50 bar. The temperature of the feed stream entering the first distillation step is preferably about its dew point temperature at given pressure, or can be lower. It is advantageous if the temperature is below the dew temperature of the mixture because in this way the reflux ratio in the low pressure column is reduced and consequently also the section of the column is smaller.

This step is performed in a first distillation column, but it is also possible to use a distillation column with at least two sections operating at different pressure and to carry out the first distillation step in a section with a high pressure of such distillation column. In this case, the high pressure section of the distillation column operates at a pressure of at least 45 bar, preferably in the range 45-55 bar, typically around 50 bar.

The first bottom product stream contains predominantly CO_2. Since CO_2 is obtained at a high pressure, it can advantageously be used for further purposes in contrast to the conventional treatment wherein CO_2 is

absorbed using amines. Preferably, a reboiler is located at the bottom of the first section of the distillation column or the first distillation column. The first top product stream comprising CO_2 and methane, with an increased content of methane, is subjected after heating to a second distillation step.In step (b) said first top product stream or a part of it is heated to a temperature that is higher than the dew point of the mixture at the pressure of the subsequent second distillation step, thereby yielding a heated first top product stream (or a heated part of said first top product stream). Heating is used herein to mean any increase in temperature of the product stream, also including superheating which means heating to a temperature above the dew point of a mixture at a given pressure. The temperature to which the first top product stream or its part is heated is determined by the dew point of the mixture at the pressure of the second distillation step. In order to avoid solid CO_2 formation in the stream entering the second distillation step, the product stream or its part is heated to a temperature higher than the dew point of the mixture at the pressure of the second distillation step, preferably 1-10°C, more preferably 3-8°C higher than the dew point.

In one embodiment, only a part of the first top product stream is heated. Preferably, the part to be heated is at least 10 mol.% of the total first top product stream, more preferably, at least 20 mol.%. The remaining, non-heated part of said first top product stream is preferably also fed to the second distillation column or the second section of the distillation column. This remaining, non-heated part is preferably fed into the distillation section or column at a location above the location where the heated part of the top product stream is fed. Preferably, the remaining, non-heated part is fed there as a liquid phase. Before being fed into the distillation section or column, the non-heated part of the first top product stream is preferably cooled by heat exchange with a suitable heat exchange medium. This embodiment, wherein only a part of the first top product stream is heated,

leads to a significantly lower cooling duty and decreases the reflux ratio in the first distillation column.

In step (c), the heated first top product stream is subjected to a second distillation step at a pressure lower than 45 bar, yielding thereby a second top product stream comprising methane and a second bottom product stream. The second distillation step is performed at a pressure that is below the critical pressure of methane. The pressure during the second distillation step is preferably higher than 35 bar, such from 35 up to but not including 45 bar, more preferably 38-43 bar, typically around 40 bar. The difference in pressure of the first and second distillation steps is preferably at least 2 bar, more preferably at least 6 bar, typically about 10 bar. It may be necessary to reduce the pressure of the heated first top product stream before entering the distillation column, since the second distillation is performed at a lower pressure. The pressure reduction can conveniently take place in a valve. Preferably, at the top of the second section or second distillation column a partial condenser is used in order to provide the reflux stream.

Similar to the first distillation step, the second distillation step takes place in a second distillation column or a second section of the distillation column. In this latter case, use can be made of a distillation column having sections operating at different pressures, *e.g.* a dual-pressure distillation column. The internals of the dual-pressure column can be of a tray or packing or a trays plus packing design.

The second top product stream consists essentially of methane and can be used for further purposes in applications where high purity of methane is desired. Preferably, this stream contains at least 98 mol.%, more preferably at least 99 mol.% and most preferably, at least 99.9 mol.% methane.

In step (d) the second bottom product stream is recycled back to the first distillation column or to the first section of the distillation column.

Suitably a pump can be used for feeding the second bottom product stream to the distillation column.

The process of the invention can be carried out in any equipment suitable for cryogenic distillation. The distillation columns preferably have from 15 to 30 theoretical stages, calculated as a sum of theoretical stages of the low and the high pressure columns or sections. The refrigerating system required for cryogenic distillation can be of any type provided that it is able to condense the vapour from the low pressure column consisting mainly of methane (with nitrogen if present in the feed stream) at the desired purity and at the equilibrium temperature value at the chosen pressure. The nitrogen, if present, should be separated in a downstream unit.

The process according to the invention allows complete separation of acid gas components from methane by avoiding, at the same time, the drawbacks common to cryogenic distillation such as the build-up of solid carbon dioxide inside the distillation column. In the process of the invention the presence of other impurities, such as higher hydrocarbons - C2, C3 - and hydrogen sulphide, make the separation even better due to a better solubility of CO_2, which in the end gives less chance of solid CO_2 formation.

In addition, the process of the invention is suitable for processing acid gas with high amounts of acid components and in the presence of other impurities such as higher hydrocarbons. The process also allows to obtain the acidic components CO_2 and H_2S at a relatively high pressure in the liquid state as the bottom stream of the high pressure section, which is advantageous for further use, e.g. sequestration. The present process is simple and economical as it does not require a third component to be added to the natural gas in order to prevent the build-up of solid carbon dioxide inside the distillation column, which component needs a further step for the separation and recovery.

The invention can also be successfully addressed to the purification of biogas to bio-methane because of the high content of carbon dioxide to be removed.

The invention is further illustrated in the following, non-limiting examples.

Examples

Example 1

The separation process is arranged as shown in Figure 1.

Stream 1 at its dew point and at 50 bar with 80% CO_2 and 20% CH_4 on molar basis is fed to the high pressure section T-1 which is operated at 50 bar. The bottom product from this section is stream 2 which is almost pure CO_2 with 0.01% of CH_4 on molar basis. This bottom product can be reboiled in a reboiler E-3. The top vapour product is stream 3 with the composition 7.24% molar CO_2 and 92.76% molar CH_4 at temperature -73.17°C.

If the pressure of this stream 3 was reduced in valve VLV-1 from 50 bar to the pressure of the low pressure section (40 bar) without superheating before entering the valve, the stream at the valve outlet would be at a temperature of about -80.70°C, with the presence of both vapour and liquid phase (the latter with 16% molar fraction of CO_2 and 84% molar fraction of CH_4). This composition at the temperature of -80.70°C would lead to the formation of solid CO_2. Stream 3 is therefore superheated in E-1 to have a temperature at the outlet of the valve 5°C higher than the dew point of the mixture at the pressure of 40 bar which results in stream 5 having a temperature of -72.75°C.

Stream 5 from the valve is fed as superheated vapour to the bottom of the low pressure section of the column T-2. The liquid stream 6 from the bottom of the low pressure section is pumped back to the high pressure section T-1. The vapour stream 8 from the top of the low pressure section T-2 is practically constituted by only CH_4 (100%). This stream can also be partially condensed in partial condenser E-2.

The number of theoretical stages in the low pressure section (without the partial condenser E-2) is equal to 10 and the number of theoretical stages in the high pressure section (without the reboiler E-3) is equal to 9.

The thermodynamic check on the formation of solid CO_2 has been performed following the method proposed in "Application of the Redlich-Kwong-Soave Equation of State to Solid-Liquid Equilibria Calculations", Giorgio Soave, Chemical Engineering Science, 34, 225-229 (1979) and also using routines available in commercial process simulators.

Table 1 shows the composition and characteristics of various streams for Example 1.

Example 2

The separation process is arranged as shown in Figure 1.

Stream 1 at its dew point and at 51 bar with the following composition: 20 mol.% CO_2, 70 mol.% CH_4, 4 mol.% C_2H_6, 1 mol.% C_3H_8, 5 mol.% H_2S, is fed to the high pressure section T-1 which operates at 51 bar. The bottom product from this section is stream 2 with composition 66.65 mol.% CO_2, 0.0 mol.% CH_4, 13.34 mol.% C_2H_6, 3.34 mol.% C_3H_8, 16.68 mol.% H_2S. The top product stream 3 has the following composition: 7.75 mol.% CO_2, 90.44 mol.% CH_4, 1.28 mol.% C_2H_6, 0.01 mol.% C_3H_8, 0.53 mol.% H_2S. If this stream was laminated from 51 bar to the pressure of the low pressure section (41 bar) without superheating before entering the valve, the stream

at the valve outlet would be at a temperature of about -75.66°C, with the presence of both vapour and liquid phase (the latter with the following composition: 19.07 mol.% CO_2, 75.32 mol.% CH_4, 3.88 mol.% C_2H_6, 0.06 mol.% C_3H_8, 1.68 mol.% H_2S). This composition at the temperature of -76.45°C would lead to the formation of solid CO_2. Therefore superheating is required and the thermal duty has been assigned so to have a temperature at the outlet of the valve VLV-1 5°C higher than the dew point of the mixture at the pressure of 41 bar. Stream 3 is thus superheated in E-1 to obtain stream 5 with a temperature of -67.14°C.

The stream 5 from the lamination valve is fed as superheated vapour to the bottom of the low pressure section of the column T-2. The liquid stream 6 from the bottom of the low pressure section T-2 is pumped back to the high pressure section T-1 via pump P-1. The vapour stream 8 from the top of the low pressure section is composed of 0.02 mol.% of CO_2 and of 99.98 mol.% of CH_4.

The number of theoretical stages in the low pressure section (without the partial condenser E-2) is equal to 10 and the number of theoretical stages in the high pressure section (without the reboiler E-3) is equal to 20.

The thermodynamic check on the formation of solid CO_2 has been performed following the method proposed in "Application of the Redlich-Kwong-Soave Equation of State to Solid-Liquid Equilibria Calculations", Giorgio Soave, Chemical Engineering Science, 34, 225-229 (1979) and also using routines available in commercial process simulators.

Table 2 shows the composition and characteristics of various streams for Example 2.

Table 1

	1	2	3	4	5	6	7	8
Vapour Fraction	1.00	0.00	1.00	1.00	1.00	0.00	0.00	1.00
Temperature [°C]	1.769	14.06	-73.17	-62.75	-72.75	-83.96	-81.33	-87.43
Pressure [bar]	50	50	50	50	40	40	50	40
Molar Flow [kgmol/h]	5000	4000	1.214e+5	1.214e+5	1.214e+5	1.204e+5	1.214e+5	999.6
	Mole Fractions							
CO_2	0.8000	0.9999	0.0724	0.0724	0.0724	0.0730	0.0730	0.0000
CH_4	0.2000	0.0001	0.9276	0.9276	0.9276	0.9270	0.9270	1.0000

Table 2

	1	2	3	4	5	6	7	8
Vapour Fraction	1.00	0.00	1.00	1.00	1.00	0.00	0.00	1.00
Temperature [°C]	-34.71	16.34	-68.39	-57.43	-67.14	-80.70	-78.41	-86.60
Pressure [bar]	51	51	51	51	41	41	51	41
Molar Flow [kgmol/h]	5000	1499	1.667e+4	1.667e+4	1.667e+4	1.317e+4	1.317e+4	3501
	Mole Fractions							
CO_2	0.2000	0.6665	0.0775	0.0775	0.0775	0.0980	0.0980	0.0002
CH_4	0.7000	0.0000	0.9044	0.9044	0.9044	0.8790	0.8790	0.9998
C_2H_6	0.0400	0.1334	0.0128	0.0128	0.0128	0.0162	0.0162	0.0000
C_3H_8	0.0100	0.0334	0.0001	0.0001	0.0001	0.0001	0.0001	0.0000
H_2S	0.0500	0.1668	0.0053	0.0053	0.0053	0.0067	0.0067	0.0000

Example 3

The separation process is arranged as shown in Figure 2.

Stream 1 at its dew point and at 50 bar with 65% CO_2 and 35% CH_4 on molar basis is fed to the high pressure section T-1 which is operated at 50 bar. The bottom product from this section is stream 2 which is almost pure CO_2 with 0.01% of CH_4 on molar basis. The top vapour product is stream 3 with the composition 7.32% molar CO_2 and 92.68% molar CH_4 at temperature -73.07°C.

Stream 3 is split into streams 3h and 3c with a ratio between the flow rates of stream 3h and stream 3 equal to 0.1286. Stream 3h is superheated in E-1h to have a temperature at the outlet of the valve VLV-1h 5°C higher than the dew point of the mixture at the pressure of 40 bar which results in stream 5h having a temperature of -72.60°C. Stream 5c is cooled in E-1c to reach the boiling point temperature of the mixture at the pressure of 40 bar at the outlet of the valve VLV-1c which results in a temperature of -83.95°C.

Stream 5h from the lamination valve VLV-1h is fed as superheated vapour to the bottom of the low pressure section of the column T-2. Stream 5c from the lamination valve VLV-1c is fed as liquid at the boiling point to the 12th tray from the top of the low pressure section of the column T-2. The liquid stream 6 from the bottom of the low pressure section is pumped back to the high pressure section T-1. The vapour stream 8 from the top of the low pressure section T-2 is practically constituted by only CH_4 (99.79% molar).

The number of theoretical stages in the low pressure section (without the partial condenser) is equal to 15 and the number of theoretical stages in the high pressure section (without the reboiler) is equal to 20.

This configuration leads to a significantly lower cooling duty (from 62 MW to 15.9 MW).

The thermodynamic check on the formation of solid CO_2 has been performed following the method proposed in "Application of the Redlich-Kwong-Soave Equation of State to Solid-Liquid Equilibria Calculations", Giorgio Soave, Chemical Engineering Science, 34, 225-229 (1979) and also using routines available in commercial process simulators.

Table 3a and 3b show the composition and characteristics of various streams for Example 3.

Table 3a

Name	1	2	3	3h	3c	4h	4c
Vapour Fraction	1	0	1	1	1	1	0
Temperature [°C]	-8.106	14.06	-73.07	-73.07	-73.07	-62.61	-81.93
Pressure [bar]	50	50	50	50	50	50	50
Molar Flow [kgmol/h]	5000	3247	1.987e+4	2556	1.732e+4	2556	1.732e+4
Name	Mole Fractions						
CO_2	0.65	0.9999	0.0732	0.0732	0.0732	0.0732	0.0732
CH_4	0.35	0.0001	0.9268	0.9268	0.9268	0.9268	0.9268

Table 3b

Name	5h	5c	6	7	8
Vapour Fraction	1	0	0	0	1
Temperature [°C]	-72.60	-83.95	-83.66	-81.10	-87.22
Pressure	40	40	40	50	40

[bar]					
Molar Flow [kgmol/h]	2556	1.732e+4	1.812e+4	1.812e+4	1753
Name	Molar fractions				
CO_2	0.0732	0.0732	0.08	0.08	0.0021
CH_4	0.9268	0.9268	0.92	0.92	0.9979

Example 4

Figure 3 shows an embodiment of the invention with 3 distillation columns wherein a third column is added between the first and second column, the third column operating at a temperature and pressure between the temperature and pressure of the first and second column.

Claims

1. A process for the removal of carbon dioxide (CO_2) from a feed mixture comprising methane and carbon dioxide (CO_2), the process comprising:

(a) subjecting the feed mixture to a first distillation step in a first distillation column or a first section of a distillation column, at a pressure of at least 45 bar, yielding after distillation a first bottom product stream comprising CO_2 and a first top product stream comprising CO_2 and methane,

(b) heating said first top product stream or a part of said first top product stream to yield a heated first top product stream respectively a heated part of said first top product stream, wherein heating is done to a temperature higher than the dew point of the stream at the pressure of the subsequent second distillation step,

(c) subjecting the heated first top product stream or the heated part of said first top product stream, respectively, to a second distillation step in a second distillation column or a second section of the distillation column, at a pressure lower than 45 bar, yielding thereby a second top product stream comprising methane and a second bottom product stream,

(d) feeding said second bottom product stream to said first distillation column or said first section of the distillation column.

2. The method according to claim 1, wherein the part to be heated is at least 10 mol.% of the total first top product stream.

3. The method according to claim 1 or 2, wherein the remaining, non-heated part of said first top product stream formed in step (b) is also fed

to the second distillation column or the second section of the distillation column.

4. The method according to claim 3, wherein the remaining, non-heated part is fed to the second distillation column or the second section of the distillation column as a liquid phase.

5. The method according to any one of the preceding claims, wherein the remaining, non-heated part of the first top product stream is cooled by heat exchange with a suitable heat exchange medium.

6. The process according to any one of the preceding claims, wherein the temperature of the feed mixture entering the first distillation step is the dew temperature or lower.

7. The process according to any one of the preceding claims, wherein the pressure during the first distillation step is in the range 45-55 bar.

8. The process according to any one of the preceding claims, wherein the pressure during the second distillation step is higher than 35 bar.

9. The process according to any one of the preceding claims, wherein in step (b) the first top product stream or said part thereof is heated to a temperature that is 1-10°C higher than the dew point of the stream at the pressure of the second distillation step.

10. The process according to any one of the preceding claims, wherein the difference in pressure of the first and second distillation steps is at least 2 bar.

11. The process according to any one of the preceding claims, wherein the second top product stream comprises at least 98 mol.% methane.

12. The process according to any one of the preceding claims, wherein the second top product stream is partially condensed in a partial condenser.

13. The process according to any one of the preceding claims, wherein the first bottom product stream is reboiled in a reboiler before entering the first distillation column or the first section of the distillation column.

14. The process according to any one of the preceding claims, wherein the pressure of the heated first top product stream or said heated part thereof is reduced before the second distillation step.

15. The process according to any one of the preceding claims, wherein the distillation steps are performed in a dual-pressure distillation column.

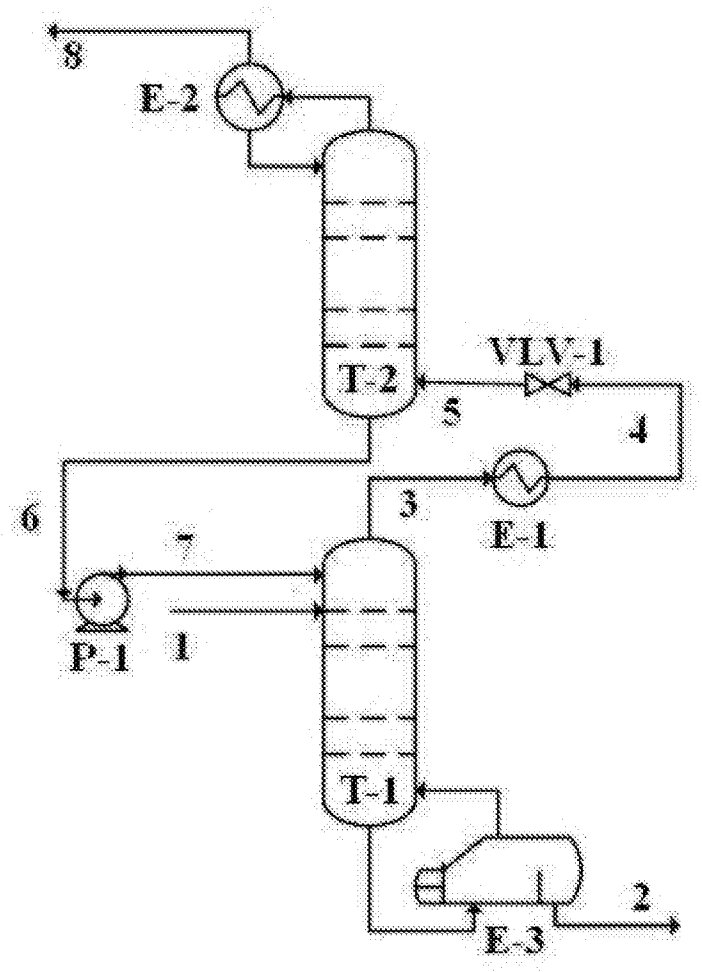

Figure 1

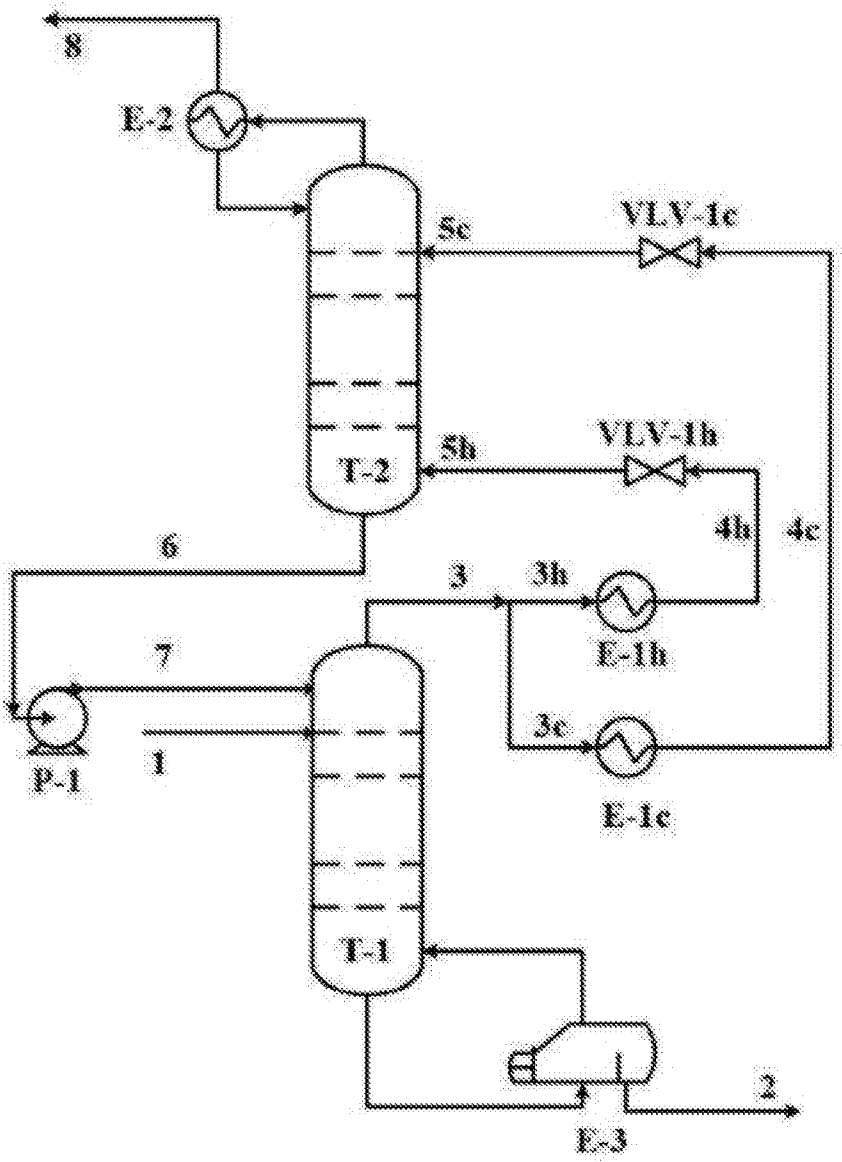

Figure 2

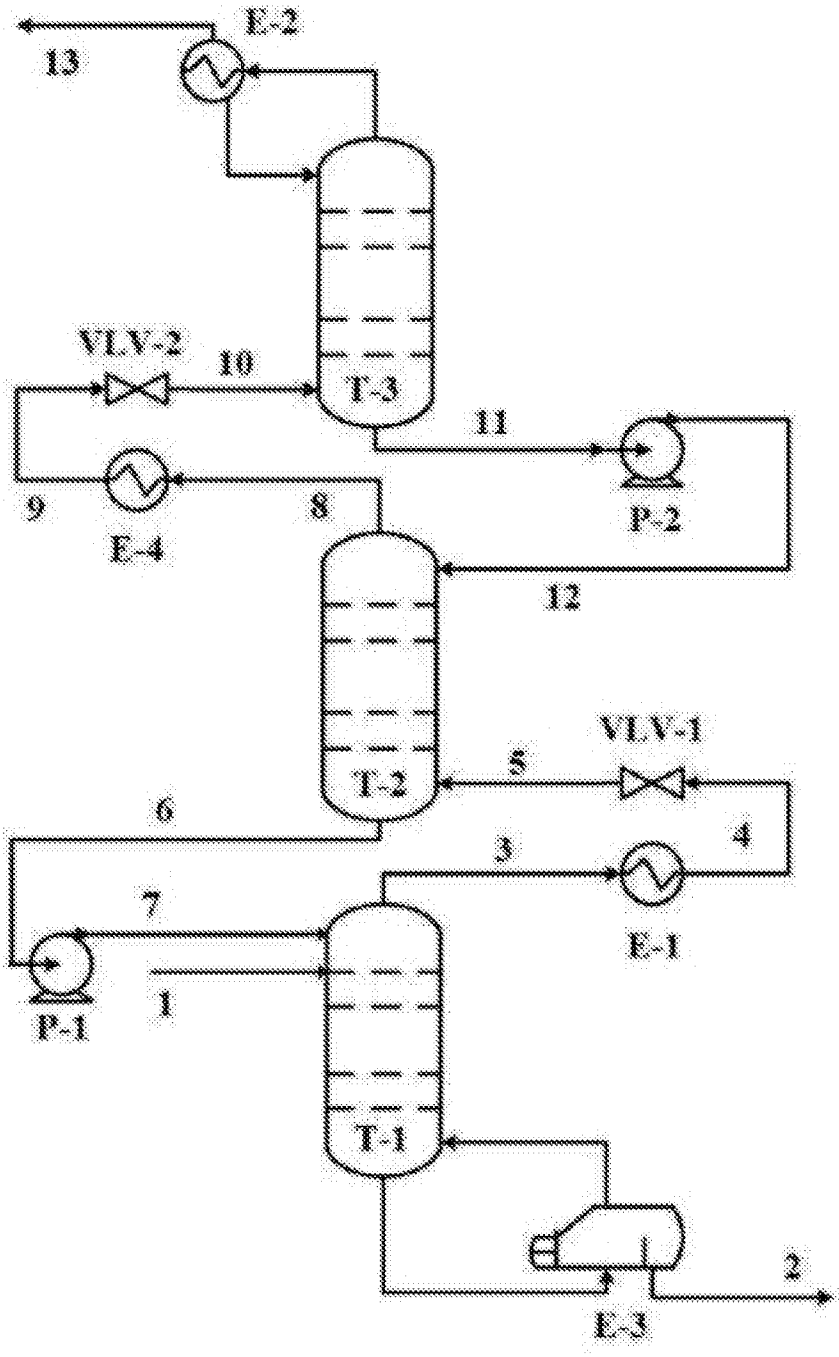

Figure 3