(No Model.)

G. W. SHEDDEN.

REGISTERING ATTACHMENT FOR JOB PRINTING PRESSES.

No. 456,439. Patented July 21, 1891.

Fig. 1.

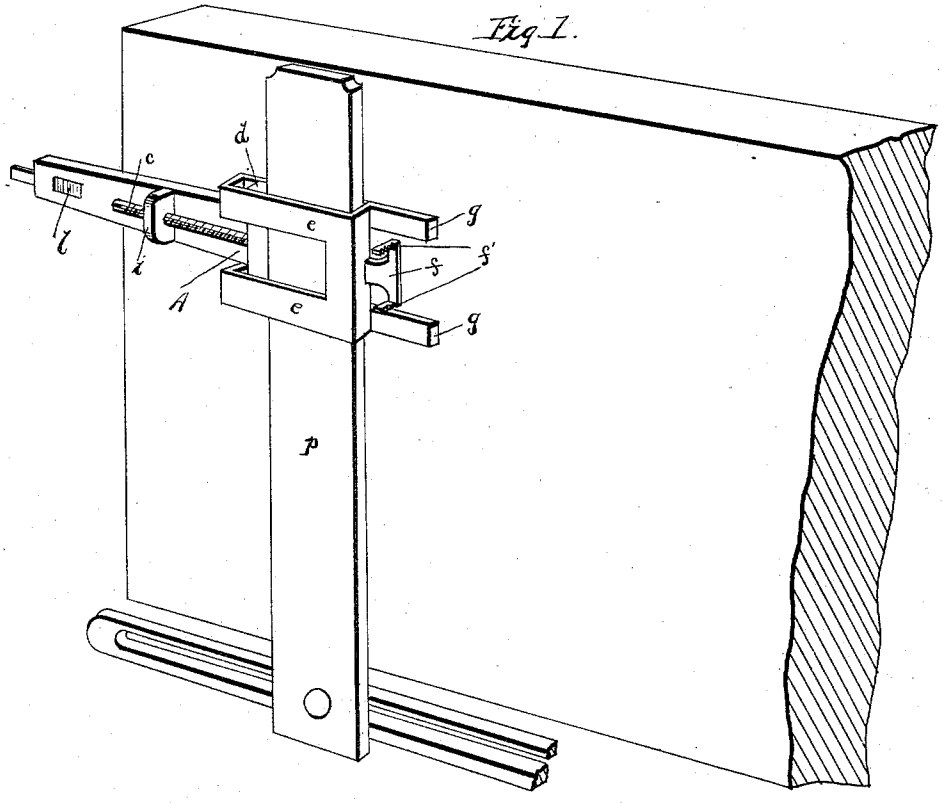

Fig. 2.

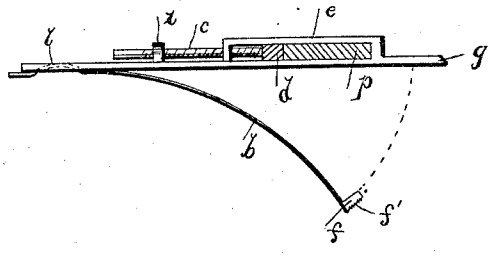

Fig. 3.

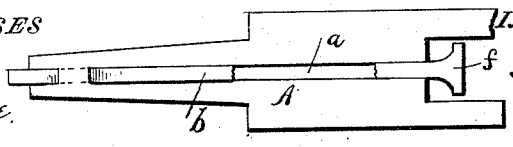

Geo. W. Shedden,
INVENTOR:
By
W. J. Fitzgerald & Co.,
Attorneys.

WITNESSES
C. S. Frye
E. E. Lodge.

THE NORRIS PETERS CO., PHOTO-LITHO., WASHINGTON, D. C.

UNITED STATES PATENT OFFICE.

GEORGE W. SHEDDEN, OF EUREKA, KANSAS.

REGISTERING ATTACHMENT FOR JOB-PRINTING PRESSES.

SPECIFICATION forming part of Letters Patent No. 456,439, dated July 21, 1891.

Application filed February 25, 1890. Serial No. 341,775. (No model.)

To all whom it may concern:

Be it known that I, GEORGE W. SHEDDEN, a citizen of the United States, residing at Eureka, in the county of Greenwood and State of Kansas, have invented a new and useful Registering Attachment for Job-Printing Presses, of which the following is a specification.

My invention consists in a new and improved registering attachment which can be secured in operative position to the gripper-arm of an ordinary platen job-printing press, and which will automatically adjust the sheet or card to be printed to the exact position desired, making it possible to do the finest quality of press-work on an ordinary job-printing press, my invention also making it possible to do as fine color-printing on a platen printing-press as can be done on presses designed for color-printing.

My invention will be hereinafter fully described and claimed.

Referring to the accompanying drawings, Figure 1 is a top perspective view showing my invention applied in its operative position. Fig. 2 is a side view of the same. Fig. 3 is a bottom plan view.

Referring to the several parts by their letters of reference, A indicates the body of the attachment, which is formed with the straps or open frame *e*, through which the gripper-arm *p* passes.

The device is placed in its operative position by slipping it down on the gripper-arm to the proper point, the said arm passing through the straps *e*, as shown, and a set-screw *c*, working in a threaded opening in a fixed bearing *i* on the attachment-body, is then turned to press the transverse bar *d*, which is pivotally mounted or swiveled on the inner end of the set-screw firmly against the side of the gripper-arm. By this arrangement the attachment can readily be fastened or secured at the desired point on a gripper-arm and can be as readily removed by simply loosening the set-screw *c*. The extended outer end of the body A is formed with the clamping-slots *l l*, through which passes adjustably the outer end of the feed-spring *b*. This spring is curved in the manner shown and its free end is formed with a head *f*, provided with fine notches or teeth *f'* on its outer edge, which come in contact with the edge of the sheet or card and prevent the latter from slipping over the edge of the pusher-head *f*. The attachment-body A is formed with the two projecting gripper-points *g g*. It will now be seen that in operation, the sheet or card to be printed having been placed on the press, as the press closes the free end of the curved spring *b* will come in contact with the tympan, and as the spring-arm *b* straightens out the head *f* at its free end will press against the edge of the sheet or card and move the same into the exact position which it should occupy on the press. A longitudinal curve or recess *a* is formed in the under side of the body A, into which the thin spring-arm *b* fits as the latter is straightened out, and at the moment that the head *f* reaches the extreme limit of its movement the gripper-fingers *g g* are closed upon the edge of the card or sheet and hold it securely in the position to which it has been automatically moved by the spring-arm *b*. The outer end of the spring-arm *b* can be adjusted in the clamping-slots *l*, so that it will feed or move the card or sheet placed on the press to any desired extent, according to the width of the margin which is to be left clear on the sheet.

From the foregoing description, taken in connection with the accompanying drawings, the construction, operation, and great practical advantages of my invention will be readily understood.

It will be seen that my new and improved attachment can be applied in an instant to the gripper-arm of any ordinary platen job-printing press; that it will automatically adjust the card or sheet to be printed to the exact point desired; that the length of movement of the pusher-head *f* can be accurately adjusted by moving the spring-arm *b* in the clamping-slots *l*, and that my invention makes it possible to do as fine color-printing on an ordinary platen job-printing press as can be done on presses designed for color-printing.

Having thus described my invention, what I claim, and desire to secure by Letters Patent, is—

1. In a registering attachment for printing-

presses, the combination of the body A, having the straps *e*, the set-screw *c*, having the transverse bar *d* pivotally secured at its inner end, and the adjusting-spring *b*, having the head *f* at its free end, substantially as set forth.

2. The combination of the body A, having the straps *e* and formed at its outer end with the clamping-slots, the set-screw *c*, having the transverse bar *d* pivotally mounted at its inner end, and the adjustable curved spring-arm *b*, the outer end of which passes through the slots *l*, substantially as set forth.

3. The combination of the body A, formed with the gripper-fingers *g* and straps *e* and having the clamping-slots *l l* in its outer end, the set-screw *c*, working in the bearing *i* and having the transverse bar *d* pivotally mounted at its inner end, and the adjustable curved spring-arm *b*, having at its inner end the pusher-head *f*, formed with the points *f'*, substantially as forth.

GEORGE W. SHEDDEN.

Witnesses:
SARAH L. SHEDDEN,
LEONARD A. SHEDDEN.