I. RABINOWITZ.

TRAVELING REQUISITE.

APPLICATION FILED MAR. 2, 1914.

1,125,396. Patented Jan. 19, 1915.

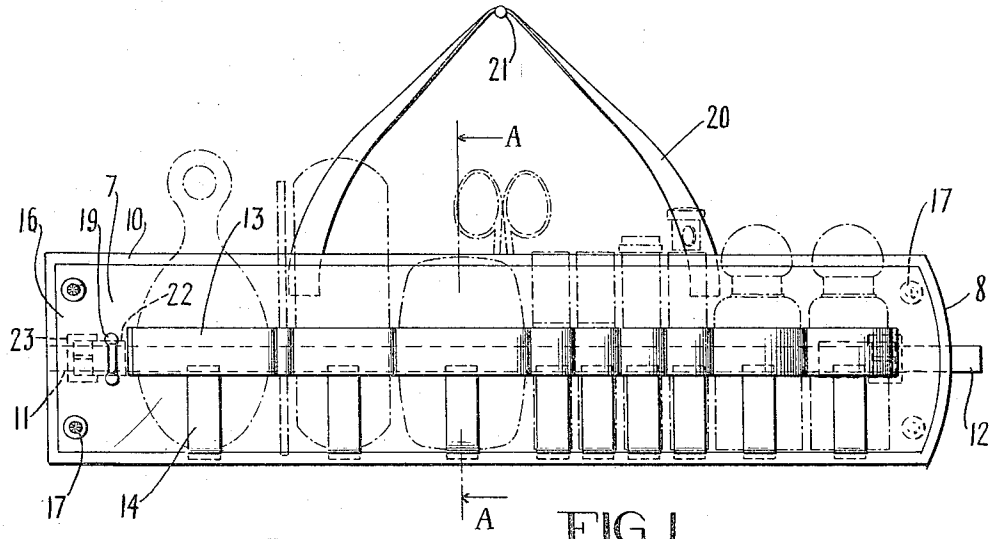

FIG. 1

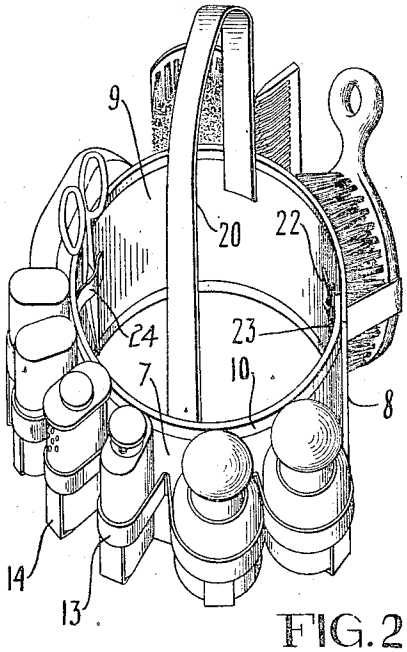

FIG. 2

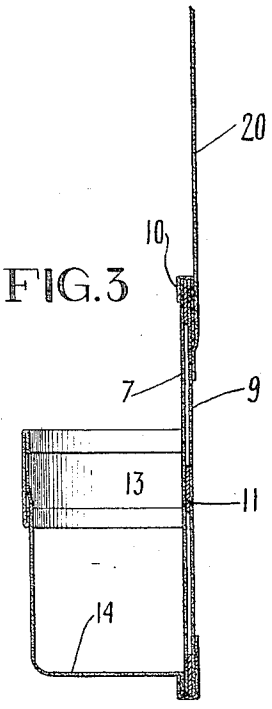

FIG. 3

Witnesses:
Arthur Choquet
Wm C. Dunn

Inventor
Isidor Rabinowitz
By his Attorney
Clifford E. Dunn

THE NORRIS PETERS C. PHOTO LITHO., WASHINGTON, D. C.

UNITED STATES PATENT OFFICE.

ISIDOR RABINOWITZ, OF NEW YORK, N. Y.

TRAVELING REQUISITE.

1,125,396. Specification of Letters Patent. Patented Jan. 19, 1915.

Application filed March 2, 1914. Serial No. 821,898.

To all whom it may concern:

Be it known that I, ISIDOR RABINOWITZ, a citizen of the United States, residing in Bronx county, city and State of New York, have invented certain new and useful Improvements in Traveling Requisites, of which the following is a full, clear, and exact description.

This invention relates to improvements in travelers' requisites and more specifically to a portable article of this character, which will provide a convenient means for conveying toilet articles from place to place and at the same time afford quick access thereto.

An object of the present invention is to provide a device for holding toilet requisites, which may be economically produced, and which is so constructed that it may be formed into a compact package, means being arranged to permit of the use of the invention under various conditions.

A further object is the production of an article of the character specified which will be of a circular form to provide a supporting stand or base under certain conditions of use, while under other conditions it will be capable of opening so as to provide a flat strip, for supporting the toilet articles, which may be readily suspended from a nail or any other suitable projecting surface to afford ready access to the articles therein contained.

My invention further contemplates the provision of a toilet requisite which, by reason of its construction, may be secured about the waist of the user thereby enabling its employment in dressing rooms and other places, where it may not be desirable to have the article leave the user's possession, or where there may not be any suitable means of support therefor.

My invention is also directed to an arrangement whereby the toilet accessories will be held in position by means which will render my invention absolutely sanitary, since I have so constructed my device that all parts thereof may be readily reached to enable the same to be cleaned, these parts for containing the accessories also being formed in a way which will serve to firmly hold the toilet articles in the respective compartments provided therefor, but will at the same time permit of the ready extraction of any one or more articles desired for use.

Many other avenues of use to which my invention may be adapted, will doubtless present themselves to those skilled in the art and I do not, therefore, limit myself to the specific embodiment herein shown and described, which illustrates a preferred form of my invention.

I shall now proceed to describe my invention with reference to the accompanying drawings, and then point out with more particularity the essential elements thereof, in the annexed claims.

In the drawings, Figure 1 is an elevation of my invention showing the carrying band in the open or extended position, which it assumes when it is to be suspended from a nail or other suitable support. Fig. 2 is a view in perspective of my invention in normally closed position and Fig. 3 is a vertical section on the line A—A of Fig. 1.

Referring to the accompanying drawings, in which like reference characters are employed to designate similar parts throughout the several views, 7 indicates the body portion or strip of my improved requisite which is preferably made of leather or other suitable flexible material, and which I have found it desirable to make in the form of a rectangular strip having one end 8 rounded or curved as shown in Fig. 1. The inner face of the body portion or strip 7 is preferably faced with a fabric lining 9, the edges of the outer portion of the strip being turned over thereupon as shown at 10, and stitched down to form a reinforcement for the edges.

Extending longitudinally of the body portion or strip 7, and intermediate of the longer parallel edges thereof, I position a strip of resilient metal 11, preferably a highly tempered spring, one end of which projects beyond the end 8 of the strip or body portion 7, as shown at 12. This spring or resilient metal strip is preferably covered with leather or other suitable enveloping protector and is located between the inner face of the body portion or strip 7 and the lining 9.

To the outer face of the body portion or strip 7, I secure in any suitable manner, the longitudinal and perpendicular straps 13 and 14, being of different sizes to provide suitable compartments for retaining such toilet articles as may be designed for use in connection with my invention, these compartments 15 being formed, as shown in detail in Fig. 3, so as to support the sides and bottom of each article.

When normally in use, the strip or body

portion 7 of my invention may be curled to form an annular support in the manner shown in Fig. 2, the end 8 overlapping the opposite end 16 of the strip or body portion 7 and being secured thereto by means of button clasps 17, the projecting tongue portion 12 of the spring or resilient metal strip in this operation being positioned within the eye 19, which serves to maintain the circular contour of the support and also acts as a guide to the proper relative positioning and locking of the button clasps. In this position, it will be observed that very small articles, such as handkerchiefs, gloves, collars, and the like, may be placed within the annular band, which is a strong desideratum when using my invention for traveling purposes, also, when the band is coiled the requisite may be readily transported or carried by means of the hand strap 20 secured to the inner surface of the body portion or strip 7, this strap also affording a means for suspending the requisite from a nail 21, or any other suitable support, if desired, when the body portion 7 is straightened out. It is manifest that under the action of the spring or resilient metal strip 11, when the button clasps are opened, the body portion or strip 7 will flatten out as shown in Fig. 1, and will be comparatively rigid providing a stable holder for the articles retained therein. It is obvious that in the use of an article of this character, which may frequently contain toilet accessories of considerable value, means should be provided against the loss of those articles and, to this end, I have found it desirable to so arrange my device that it may be secured to the person of the user. For this purpose, I have fixed to the inner surface of the body portion or strip 7 in proximity to each end thereof, a short strap 22 carrying a buckle 23, so that the article may be belted about the waist of the user, the user, therefore, being enabled at all times to have the toilet accessories under her immediate supervision and located in a manner which will permit of the use of such article as may be desired with great facility. In practical use, it may also be found expedient to position some article on the inner surface of the body portion or strip 7, and for this purpose, as shown in Fig. 2, I provide loops 24.

It will be seen that by the structure I have shown and described that my invention may be readily utilized as an independent article, to stand on a dressing table or other suitable support, or for transportation purposes, it may be placed within a suitable protecting receptacle such as a cylindrical casing, having an open mouth, which may be closed with a draw string or other suitable means. However, this expedient is well known in the art and I do not lay claim to such a protecting casing. When employed in such manner, it is apparent that when my requisite has been placed within such a casing, the space within the annular support may be used for containing any articles desired.

While I have described my invention with particular reference to the toilet requisite herein shown, I do not limit myself to those details of structure described, since the same may be changed in various ways without departing from the spirit and scope of my invention.

Having thus described my invention what I claim as new herein and desire to secure by Letters Patent is:

1. In a traveler's requisite, the combination of a flexible strip having article containing pockets secured to said strip, resilient means extending longitudinally thereof from end to end for maintaining the same in a normally flattened position and means for detachably connecting the ends of said strip against the tension of said resilient means to provide an annular support, for the purposes described.

2. A traveler's requisite, comprising a flexible rectangular strip formed with article containing pockets on the outside thereof, a spring secured to the inner face of said strip and extending longitudinally thereof, said spring projecting beyond one end of said strip to form a tongue, the strip being maintained in a normally flat condition by said spring, and means for detachably connecting the ends of said strip against the tension of said spring to provide an annular support for the articles contained in said pocket and means secured to said strip in proximity to one end to receive said tongue when the ends of the strip are secured together.

3. A traveler's requisite, comprising a rectangular flexible strip provided on its outer surface with a plurality of article containing pockets, a spring secured to the inner face of said strip and extending longitudinally thereof, one end of said spring projecting beyond one end of said strip to provide a tongue, means for detachably securing the ends of said strip together against the tension of said spring to form a ring, means mounted on the outer surface of said strip to form a guide for and adapted to receive said tongue and hold the same in engagement with said strip when the ends thereof are joined together, and a supporting strap secured to said strip at two points in proximity to the upper edge thereof.

4. In a device of the character described, the combination of a flexible strip provided with a plurality of article containing pockets on one side thereof, the edges of said strip being reinforced, a spring secured to said strip and extending longitudinally

thereof, one end of said spring projecting beyond the adjacent end of said strip to provide a tongue, said spring normally maintaining said strip in a flattened position, means for detachably securing the ends of said strip together against the tension of said spring to form a ring and provide a support for the articles contained in said pockets, means for suspending said strip from a suitable support and means secured to one face of said strip whereby the same may be attached to the person of the user.

5. A device of the character described, comprising a rectangular flexible strip having its edges reinforced and provided on one side thereof with a plurality of article containing pockets, a strip of resilient metal secured to the opposite side of said strip and extending longitudinally thereof, one end of said resilient strip extending beyond the adjacent end of said flexible strip and providing a tongue, means for detachably securing the ends of said flexible strip together against the tension of said resilient strip, an eye provided on one side of said flexible strip adjacent to one end thereof and adapted to form a guide and retaining means for said tongue when the ends of said flexible strip are secured together, means secured to said flexible strip for suspending the same from a suitable support and means mounted on the inner face of said flexible strip, whereby said flexible strip may be belted to the person of the user of said device.

In witness whereof I have hereunto set my hand in the presence of two subscribing witnesses.

ISIDOR RABINOWITZ.

Witnesses:
WM. C. DUNN,
P. FRANK SONNEK.

Copies of this patent may be obtained for five cents each, by addressing the "Commissioner of Patents, Washington, D. C."