June 15, 1926. 1,589,315

J. W. JOHNSTON

BELT

Filed Feb. 6, 1925 2 Sheets-Sheet 1

Fig. 1.

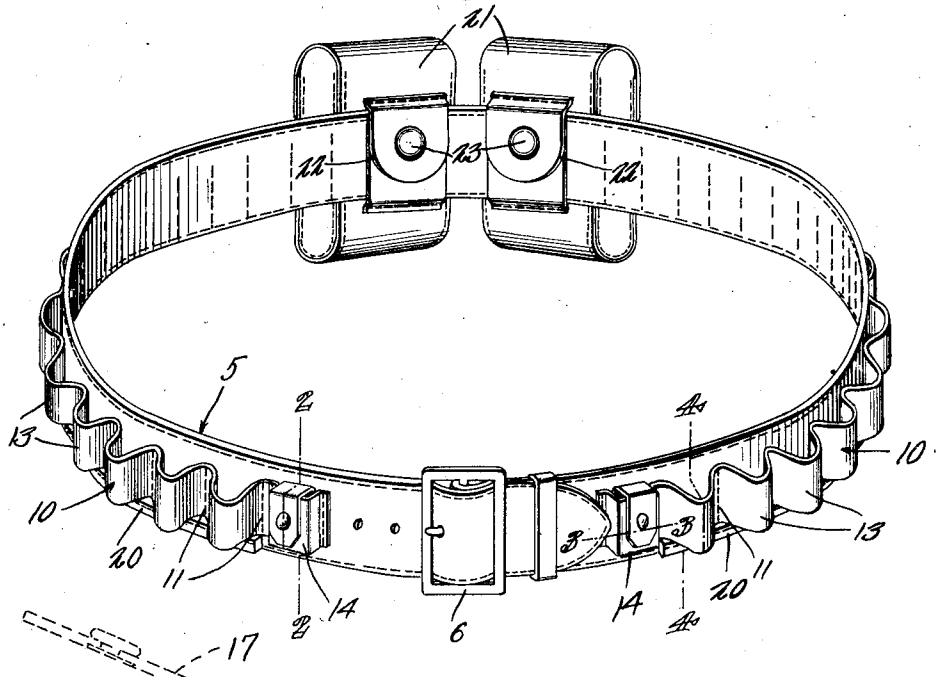

Fig. 2.

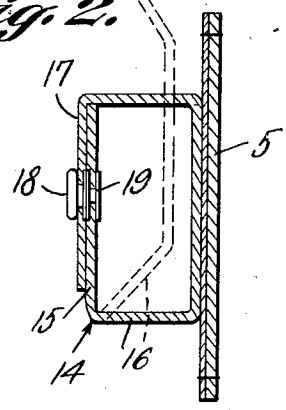

Fig. 3.

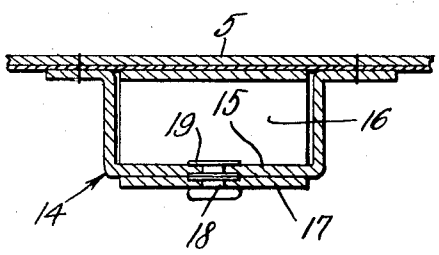

P. J. Hickey.

WITNESS:

J. W. Johnston,

INVENTOR

BY Victor J. Evans

ATTORNEY

June 15, 1926. 1,589,315

J. W. JOHNSTON

BELT

Filed Feb. 6, 1925 2 Sheets-Sheet 2

Fig. 4.

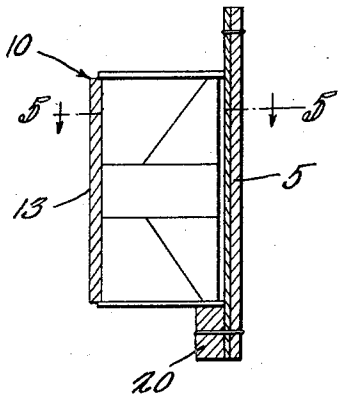

Fig. 5.

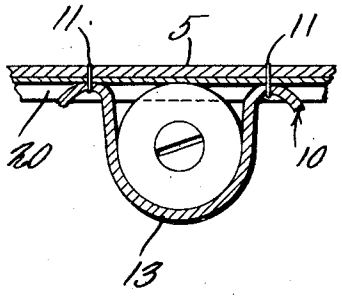

Fig. 6.

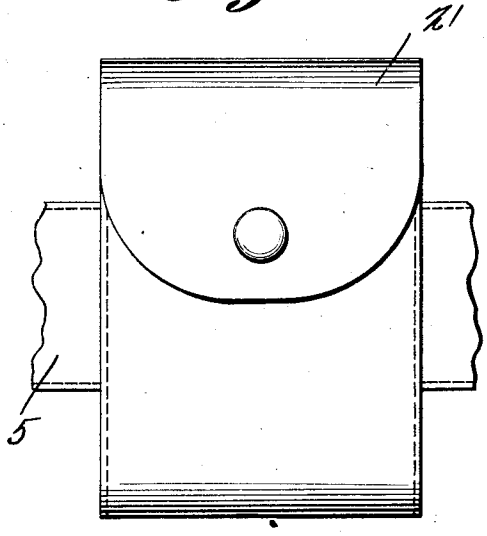

Fig. 7.

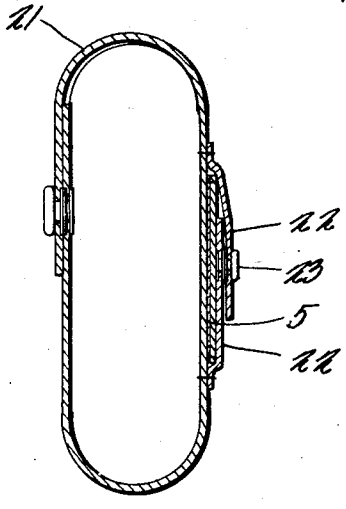

R. J. Hickey.

WITNESS:

J. W. Johnston,

INVENTOR

BY Victor J. Evans

ATTORNEY

Patented June 15, 1926. 1,589,315

UNITED STATES PATENT OFFICE.

JOHN WHITE JOHNSTON, OF ROCHESTER, NEW YORK.

BELT.

Application filed February 6, 1925. Serial No. 7,381.

This invention relates to a photographer's belt and the principal object is to provide a belt to be worn by a photographer carrying small cameras, rolls of films and other necessary supplies used in conjunction with photography.

A further object of the invention is to provide a light and durable belt of this character which will carry the cameras and photographic supplies in a manner as to prevent the weight of the article from becoming noticeable to the wearer, and at the same time hide the camera and other articles contained in the various pockets from view, when worn with a vest or coat over the belt.

The invention also contemplates a belt to be equipped with a plurality of camera or kodak receiving casings which are removably held in the belt and can be readily detached therefrom at will.

With the preceding and other objects and advantages in view, the invention consists in the novel construction and arrangement of elements and operations to be hereinafter specifically referred to, illustrated in the accompanying drawings, and pointed out in the appended claims.

Figure 1 is a perspective of a photographer's belt constructed in accordance with my invention.

Figure 2 is an enlarged vertical sectional view taken on line 2—2 of Figure 1.

Figure 3 is a horizontal sectional view taken on line 3—3 of Figure 1.

Figure 4 is a vertical sectional view taken on line 4—4 of Figure 1.

Figure 5 is a horizontal sectional view on line 5—5 of Figure 4.

Figure 6 is a fragmentary elevation of one of the camera casings, and

Figure 7 is a vertical sectional view of the same.

Referring to the drawings in detail wherein corresponding characters of reference designate corresponding parts throughout the several views, the numeral 5 designates a belt constructed of leather or other material possessing the desired strength. A buckle 6 is provided at one end for the reception of the opposite end of the belt. Secured to the outer face of the belt and surrounding the same is a strip 10 which is arranged substantially in corrugated formation and provided with rows of stitching 11 to provide a plurality of pockets 13 for the reception of rows of films as shown in Figures 4 and 5. The ends of this strip 10 are fashioned to provide lens retaining places 14. In this connection it will be stated that the casing 14 at the right of the buckle is adapted to contain the film or lens while the casing at the left of the buckle is adapted to contain an attachment lens. To that end these ends are arranged formed in substantially U-shape in horizontal section and are provided with extensions 15 which are bent to provide a bottom wall 14 and a closure flap 17, the latter being provided with a fastening 18 engaged with a cooperating fastening 19 carried by the outer walls of these casings. In connection with the casing 14, it will be observed that upon pulling upwardly of the tabs the lens will be lifted where they can be readily grasped and removed. This is advantageous over the usual small pockets or compartments which render it awkward to insert the fingers to remove the lens.

Secured to the lower edge of the belt 5 and extending circumferentially of the same is a bead strip 20 which is disposed beneath the lower ends of the pockets 13 and serves as a support for the lower ends of the spools or rolls of film as shown in Figure 4. This bead 20 serves to prevent the rows of films from dropping from the pocket. Arranged on the belt 5 at the rear thereof is a pair of kodak cases. Coacting tabs 22 are secured to the rear wall of these cases 21 and are detachably held together by means of cooperating fastenings 23. These tabs together constitute loops to slidably receive the belt.

It will be apparent that if desired either one or both of these cases 21 can be removed by simply detaching the tabs 23.

From the disclosure it will be seen that I have provided a simple and durable belt to be worn by photographers and which will carry all of the paraphernalia needed during the taking of pictures by an amateur photographer. The pocket 13 will serve to carry rolls of films while the cases 14 may be utilized to carry auxiliary or special lenses. The cases 21 are utilized to carry pocket cameras and kodaks.

While I have shown and described the preferred embodiment of the invention, I desire to have it understood that I do not limit myself to what is herein shown and described, as such changes may be made in

the form, construction and arrangement of parts as will not depart from the spirit of the invention or the scope of the subjoined claims.

What is claimed is:—

1. In a photographer's device the combination with a belt, of a strip secured to the belt and arranged in corrugated form to provide a plurality of pockets for retaining rolls of films, a bead strip secured to the lower edge of the belt upon which the cylindrical objects rest and are thereby prevented from passing from the pockets.

2. The combination with a belt, of a plurality of pockets carried thereby, a bead secured to the belt and underlying the pockets and serving as a rest for the objects arranged within the pockets and camera receiving cases supported on the belt, the camera cases being retained on the belt and coacting tabs secured to each case and detachable fastenings connecting the tabs together about the belt.

In testimony whereof I affix my signature.

JOHN WHITE JOHNSTON.