J. F. S. GOBLE.

LEVER MECHANISM.

APPLICATION FILED MAR. 21, 1908.

913,490. Patented Feb. 23, 1909.

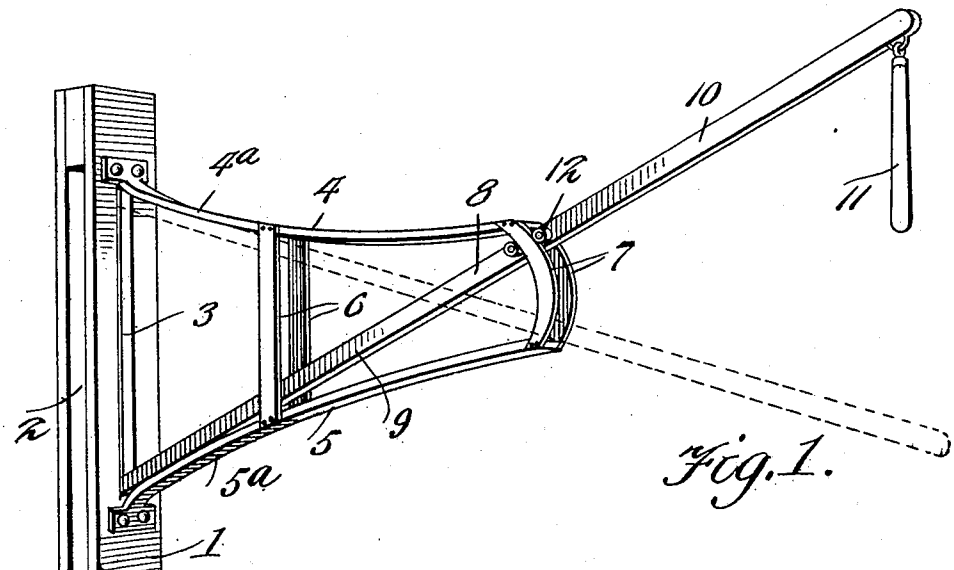

Fig. 1.

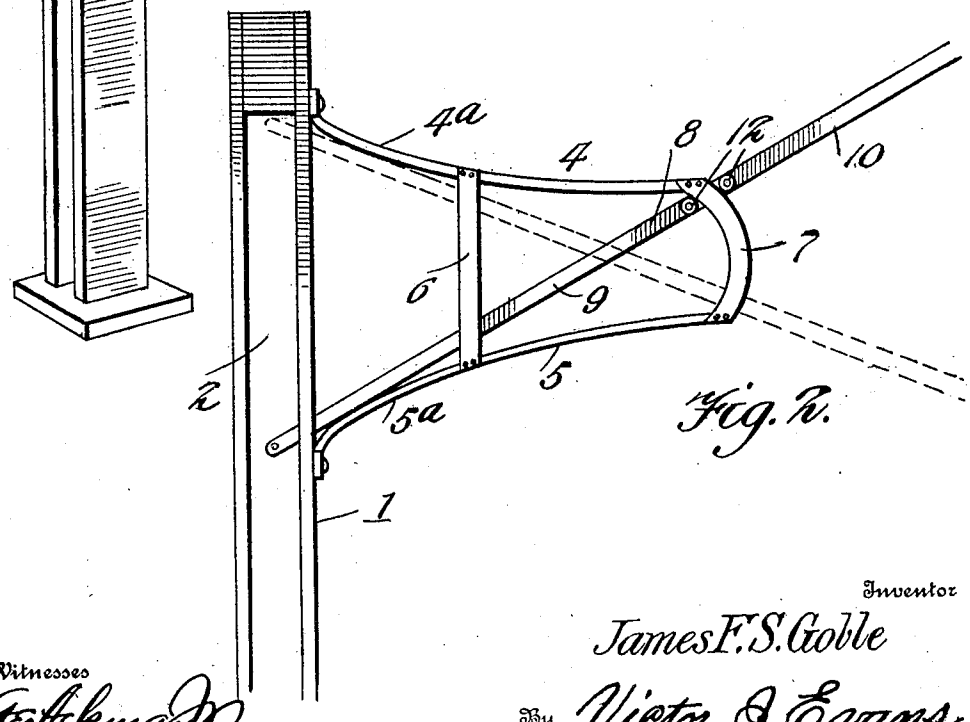

Fig. 2.

Witnesses

E. Ackmann Jr.

C. C. Hines.

Inventor

James F. S. Goble

By Victor J. Evans

Attorney.

THE NORRIS PETERS CO., WASHINGTON, D. C.

UNITED STATES PATENT OFFICE.

JAMES F. S. GOBLE, OF NEW ALBIN, IOWA, ASSIGNOR OF ONE-HALF TO HOWARD C. BOYER, OF NEW ALBIN, IOWA.

LEVER MECHANISM.

No. 913,490. Specification of Letters Patent. Patented Feb. 23, 1909.

Application filed March 21, 1908. Serial No. 422,557.

To all whom it may concern:

Be it known that I, JAMES F. S. GOBLE, a citizen of the United States, residing at New Albin, in the county of Allamakee and State of Iowa, have invented new and useful Improvements in Lever Mechanism, of which the following is a specification.

This invention relates to an eccentric lever mechanism for opening and closing gates or doors or operating other parts of any kind or type for which it is adapted.

The object of the invention is to provide a lever mechanism of this character which is simple of construction, inexpensive of production, and by means of which a considerable amount of power may be applied with a minimum amount of operating force.

The invention consists of the features of construction, combination and arrangement of parts hereinafter fully described and claimed, reference being had to the accompanying drawing, in which:—

Figure 1 is a perspective view of a lever mechanism embodying my invention showing the lever in normal and thrown positions in full and dotted lines. Fig. 2 is a side elevation of the same.

Referring to the drawing, the numeral 1 designates a supporting member, which may consist of a post or jamb at one side of the gateway or doorway, which member is provided with a vertical transverse slot 2, to receive the adjacent end of the gate or door, which is supported to travel from open to closed positions and vice versa upon a stationary horizontal or tilting track. The gate or door and its mountings are not herein shown, as they constitute no part of the present invention and as the latter may not only be employed for rocking a tilting track but may be used for operating the rack mechanism of a sliding gate or operating other tilting parts for opening and closing gates or doors or for other analogous purposes. In fact, the lever mechanism may be used to actuate various kinds of operating and controlling devices, and therefore is not limited to any specific use. One of the faces of the post or supporting member 1 is formed with a vertical slot 3 which communicates with the aforesaid transverse slot 2.

Arranged upon the face of the post in which the slot 3 is formed is a fulcrum frame comprising upper and lower longitudinal bars 4 and 5 secured at their inner ends in any suitable manner to the post above and below the slot 3. The bars are connected intermediate of their length by vertical bracing strips 6, which may also serve as guides or stays for the lever to assist in preventing lateral movement thereof, as hereinafter described. Preferably, the bars are longitudinally curved or suitably inclined from the post toward each other, so that they converge outwardly throughout their length, the inner portion 4^a and 5^a of said bars being arranged in a prescribed divergent relation and at an angle to the post to form stops or abutments limiting the upward and downward movements of the power arm of the lever. The outer ends of the bars 4 and 5, which are spaced a considerably less distance apart than their inner ends forming the stop portions 4^a and 5^a, are connected by a pair of vertical parallel strips 7, forming the guide rails of a slotted or divided track, said rails being curved on the arc of a circle of a suitable thrust radius.

A lever 8 extends longitudinally through the fulcrum frame between the bars 4 and 5, bracing strips 6 and rails 7, by which it is guided and limited in its movements. The forward portion of the lever forms a power arm 9, having its forward or free end projecting through the slot 3 into the slot 2 of the post 1 and adapted for connection with the track or other part to be tilted. This arm 9 rocks on the bar 5, which forms a shifting fulcrum for the lever. The outer or rear end of the lever projects beyond the curved track and forms an operating arm 10, which may be provided at its outer end with a suitable handle or grip 11, whereby the lever may be operated. At the point of junction of the two arms 9 and 10 the lever is provided on its opposite sides with pairs of suitable guide devices, such as pins or rollers 12, to engage and slide and run upon the inner

and outer edges of the track rails 7, the rails and guides forming a shifting means on which the lever swings and simultaneously rides in the arc of a circle in its movements, whereby the lever is shifted endwise as it swings on the fulcrum bar 5, to cause the forward end of the power arm 10 to move in a straight or rectilinear path.

The normal position of the lever is shown in Figs. 1 and 2 in full lines, the weight of the lever arm 9 or the part to which it is attached being sufficient to hold said arm down in its lowered position against the stop portion 5^a of the fulcrum bar 5, while the arm 10 is at the limit of its upward movement in the slotted track 7 and bears against the outer end of the arm 4. When the arm 10 is drawn downward by means of the grip 11 to swing the lever for the purpose of tilting the part to which it is applied, the arm 9 rocks upon the fulcrum bar 5 and successively shifts its position along the surface of the latter as the free end thereof swings upwardly in the slot 3. The arm at the limit of its downward movement occupies the lower end of the slotted track and rests against the outer end of the bar 5, while the power arm of the lever is at the upper end of the slot 3 and bears against the stop 4^a, as illustrated in both figures in dotted lines. As the arm 9 rocks on the fulcrum bar 5 and constantly shifts its position thereon the rollers 12 travel along the guide rails 7 and act to draw the lever back or to shift it endwise in a rearward direction to give a straight line motion to the free end of the arm 9, or, in other words, to cause the forward end of the lever to move in a true rectilinear path. It will thus be seen that in its up and down swinging movement, the lever not only swings in a determined arc on its shifting fulcrum but is shifted endwise by the guides 7 and 12, thus varying its center to impart an eccentric throw to the arm 9, and to cause the free end of said arm to move in a straight or rectilinear path, thus enabling a high degree of power to be obtained through the expenditure of a minimum degree of force and avoiding the objections to levers of that class pivotally mounted upon fixed pins, bolts or fulcrums. When the grip 11 is released, the weight of the tilting part may be utilized to return the lever to normal position, or any other means for that purpose may be employed. The combined swinging and shifting movement of the lever in an arcuate path also adapts the lever to have ready and free movement and prevents binding thereof at any point in its path of travel.

Having thus fully described the invention, what is claimed as new is:—

1. A power mechanism comprising a curved fulcrum, a lever free from connection with said fulcrum and adapted to rock loosely thereon for a constant shifting of its position on said fulcrum, and guiding means for shifting the lever endwise as it rocks to cause the free end thereof to move in a straight path.

2. A power mechanism comprising a support provided with a curved fulcrum, a lever extending through said support and adapted to rock upon said fulcrum and to shift its position along the length thereof, and guiding means for shifting the lever endwise as it rocks on said fulcrum to cause the free end of the lever to move in a straight path.

3. A power mechanism comprising a floating lever, a curved shifting fulcrum for the lever, and means for shifting the lever endwise as it rocks upon said fulcrum to adapt the power end of the lever to move in a straight path.

4. A power mechanism comprising a bracket having a longitudinally curved fulcrum portion and an arcuate guide disposed generally at right angles thereto, and a lever extending loosely through said bracket and adapted to have a shifting rocking motion on said fulcrum portion, said lever being provided with guiding means engaging and traveling on said arcuate guide to shift it endwise in its rocking movements to cause the operating end of the lever to move in a straight path.

5. A power mechanism comprising a support, a bracket carried by the support and provided with a longitudinally curved fulcrum bar and an arcuate guide extending at an angle to said fulcrum bar, and a lever extending through said bracket and free to swing loosely for a shifting rocking movement on the fulcrum bar, said lever being provided with means slidably and pivotally engaging said arcuate guide whereby the lever is shifted endwise in its rocking movements to cause the operating end thereof to move in a straight path.

6. A power mechanism comprising a support having a curved fulcrum, a lever loosely mounted upon the support for a shifting rocking motion upon said fulcrum, and means for shifting the lever endwise in its rocking movements to effect a rectilinear motion of the operating end thereof.

7. A power mechanism comprising a support having a longitudinal guide slot, a bracket mounted upon the support and provided with a curved fulcrum, and also provided with a curved guide portion, and a lever extending loosely through said bracket and having its forward end arranged to move in said slot, said lever being adapted for a shifting rocking movement on the fulcrum and provided with guiding means engaging said curved guide portion to longitudinally shift said lever in its swinging movements.

8. A power mechanism comprising a slot-

ted support, a bracket carried by the support, said bracket having a longitudinally curved fulcrum bar and curved guides disposed at right angles to said bar and at the end thereof opposite said support, a lever extending loosely through the bracket having its forward end arranged to move in the slot in the support, said lever being adapted to have a shifting rocking motion on the fulcrum bar, and a guiding means carried by the lever and slidably and pivotally engaging said curved guides to longitudinally shift said lever in its swinging movements.

In testimony whereof I affix my signature in presence of two witnesses.

JAS. F. S. GOBLE.

Witnesses:

H. MARTIN,

MICHAEL MOORE.