Jan. 3, 1928. 1,654,539

W. S. FERRIS

CHAIR

Filed Jan. 8, 1924 2 Sheets-Sheet 1

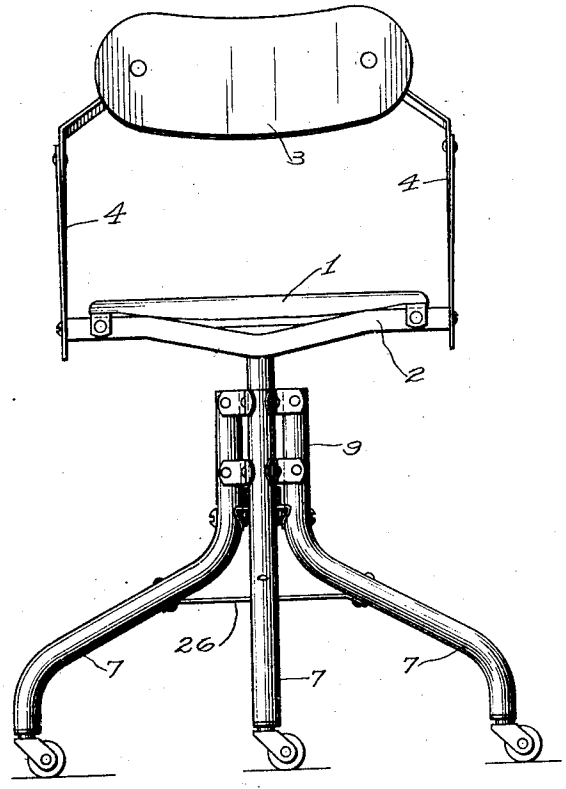

Fig. 1

Inventor
William S. Ferris
by Orchard M. Nelson
Atty.

Jan. 3, 1928. 1,654,539

W. S. FERRIS

CHAIR

Filed Jan. 8, 1924 2 Sheets-Sheet 2

Fig. 3

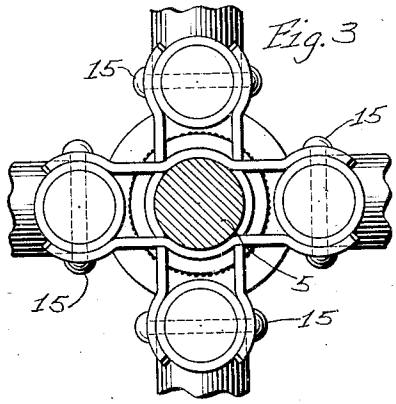

Fig. 4

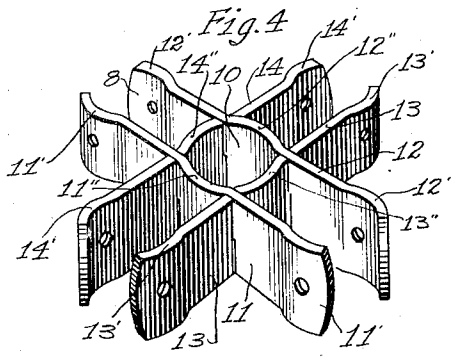

Fig. 2

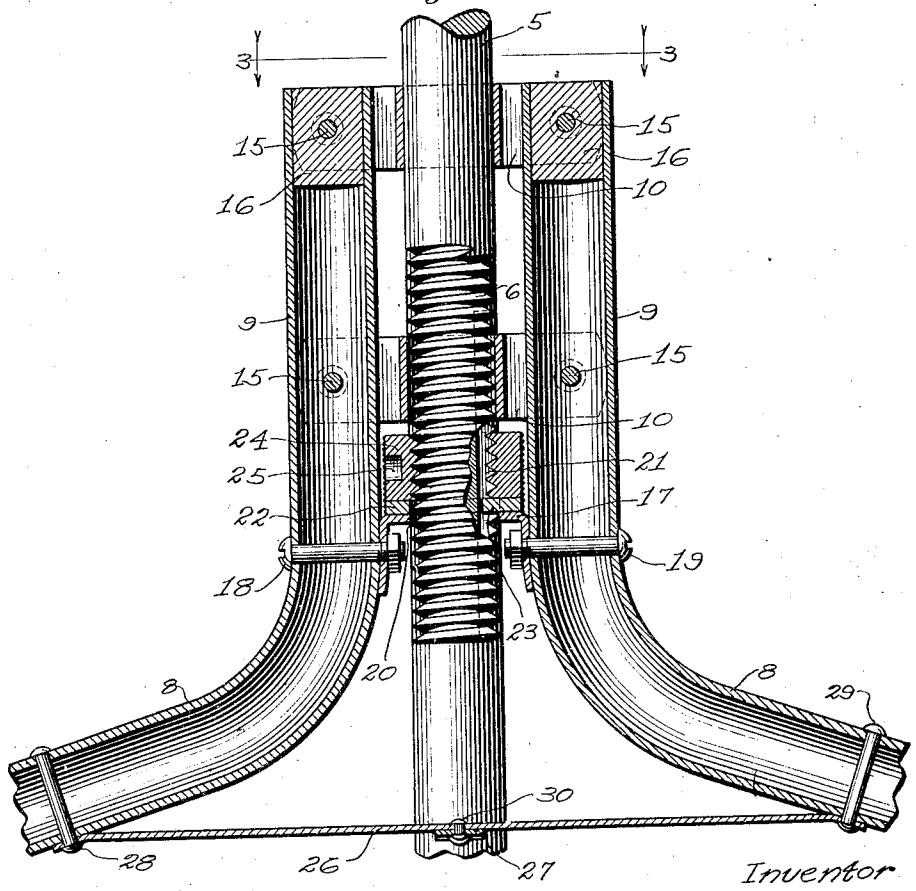

Inventor

William S. Ferris

by Cottrell Nelson

Atty.

Patented Jan. 3, 1928. 1,654,539

UNITED STATES PATENT OFFICE.

WILLIAM S. FERRIS, OF ELKHART, INDIANA.

CHAIR.

Application filed January 8, 1924. Serial No. 685,004.

My invention relates generally to improvements in chairs, but relates more particularly to improvements in swivel chairs.

The general object of my invention is to improve the construction and operation of swivel chairs.

Another object of my invention is to provide a swivel chair that can be quickly and easily adjusted to vary the height of the seat.

Again I aim to provide a swivel chair construction that can be produced at relatively low cost.

My invention consists generally in a chair of the form, arrangement, construction and co-operation of the parts, whereby the above named objects, together with others that will appear hereinafter are attainable; and my invention will be more readily understood by reference to the accompanying drawings which illustrate what I consider, at the present time, to be the preferred embodiment thereof.

In said drawings:

Fig. 1 is a front elevation of a chair embodying my invention.

Fig. 2 is an enlarged detail sectional view of the swivel portion of the chair.

Fig. 3 is a view substantially along the line 3—3 of Fig. 2; and

Fig. 4 is a perspective view of the leg holding and spacing device.

The chair here shown is provided with a seat 1, which is carried by and upon a seat supporting frame 2. A back rest 3 is also provided, which is suitably supported by braces 4. Inasmuch as these parts may be of usual or desired construction, a detailed description thereof will not be given.

Secured to the seat frame 2, preferably substantially centrally thereof, and depending therefrom is a post 5, which as is best shown in Fig. 2 is provided with screw threads 6. The post 5 is positioned within the legs of the chair and operates in a novel manner. The legs 7 of the chair, of which there are four in this instance, extend inwardly and upwardly along the portions 8 thereof, finally curving into the substantially vertically positioned portions 9 that are closely grouped together. The portions 9 are suitably spaced apart and held in rigid relation by means of the bracing and holding structure 10 best shown in Fig. 4. The structure 10 comprises four pressed metal members 11, 12, 13 and 14 which are provided respectively with curved end portions 11′, 12′, 13′ and 14′ conformable to the curvature of the tubular legs. The members 11, 12, 13, and 14 are also provided with curved central portions 11″, 12″, 13″ and 14″, which together practically form a sleeve or bearing for the post 5. The members 11, 12, 13 and 14 are each slotted half across, adjacent the curved central portions 11″, 12″, 13″ and 14″, so that the parts can be assembled as is well shown in Fig. 4, and the said members are riveted or otherwise secured to the chair legs by means of fastening devices 15 that pass therethrough as is best shown in Figs. 2 and 3. There are two sets of these bracing and holding structures 10, one adjacent the upper end of the legs and one spaced somewhat downwardly therefrom, but inasmuch as the construction of the lower one is the same as that of the upper one just described, no description thereof will be given and the reference character 10 is merely directed thereto as a whole. In order to close the upper ends of the tubular legs, metal plugs 16 have been inserted through which the fastening devices 15 pass.

Below the lower leg bracing and holding devices 10, I have secured a cross member 17, as by means of the bolts 18 and 19 that pass through the respective legs. The member 17, in turn, is provided with a central opening 20 of a size sufficient to permit the passage of the threaded portions 6 of the post 5 therethrough. The threaded portion of the post is provided with a keyway 21 and therein the tongue portion 23 of a disc 22 enters; the disc 22, in turn, resting upon the member 17. An internally threaded nut 24 is provided for co-action with the screw thread 6 of the post 5.

In operation, the weight of the occupant of the chair tends to press the post 5 downwardly, which action is prevented by the nut 24 resting on the disc 22 which in turn, is supported by the member 17. The chair may be freely revolved without changing the adjustment of the seat, because the normal pressure is such as to cause the disc 22 and the nut 24 to revolve together. If, however, an adjustment of the position upwardly or downwardly is desired, all that it is necessary to do is to place a rod, the end of a screw-driver or any other tool into the socket 25 of the nut 24 and thereby prevent rotation of the nut whilst the post 5 is rotated.

Obviously, if the post 5 is rotated in one direction, the post and seat will be raised and if rotated in the opposite direction, it will be lowered. As soon as the tool is withdrawn, the nut 24 again rotates with the post and swivel movement of the chair may take place without disturbing its adjustment. It is not necessary to turn the chair upside down to make an adjustment as is the case with some chairs hitherto devised and the accessibility of the nut 24 makes adjustment a simple and easy operation.

The chair legs are further braced by the strap members 26 and 27, which are secured to the legs as by means of rivets 28 and 29 and to each other by means of a rivet 30. (See Fig. 2.)

The chair is at once simple in construction, durable in operation and convenient in use and its many other advantageous characteristics will be understood by those skilled in this art without further comment.

I claim:

1. A chair embodying therein, a threaded post, a plurality of tubular leg members, the top ends of which are arranged in closely grouped relation about the post, means securing the top ends of said legs in said relation and forming a rotative bearing for the post, a thrust plate connecting said legs below said means, a nut on said post and a washer engaged between said nut and thrust plate and rotative with said post but capable of a movement longitudinally thereof.

2. A chair embodying therein, a threaded post having a key way therein, a plurality of tubular leg members, the top ends of which are arranged in closely grouped relation about the post, means securing the top ends of said legs in said relation and forming a rotative bearing for the post, a thrust plate connecting said legs below said means, a nut on said post and a washer interposed between said nut and thrust plate and having a tongue engaged in the key way in the post.

3. A chair embodying therein, a threaded post, having a key way therein, a support comprising a plurality of tubular legs, the top ends of which are vertically disposed in closely grouped relation with the bottom ends spread to form a stable base, vertically spaced means engaged with and securing the top ends of said legs in said grouped relation, a thrust plate below the bottommost of said means and also fixed to said legs, a nut threaded on the post between said bottommost means and thrust plate and a washer between said nut and thrust plate and having a tongue engaged in the key way of the post.

In testimony whereof, I have hereunto set my hand, this 27 day of December, 1923.

WILLIAM S. FERRIS.