United States Patent

[11] **3,589,810**

[72] Inventors **Minoru Umahashi**
Kanagawa-Ken;
Kenzou Ariyama, Tokyo, both of, Japan

[21] Appl. No. **785,169**
[22] Filed **Dec. 19, 1968**
[45] Patented **June 29, 1971**
[73] Assignee **Kabushiki Kaisha Ricoh**
Tokyo, Japan
[32] Priority **Dec. 28, 1967**
[33] **Japan**
[31] **42/83602**

[54] **PROCESSING DEVICE FOR PHOTOCOPYING MACHINE**
3 Claims, 2 Drawing Figs.

[52] **U.S. Cl.** **355/27,** 96/27, 355/100, 355/106
[51] **Int. Cl.** **G03b 27/32**
[50] **Field of Search** 96/27; 355/27, 100, 106

[56] **References Cited**

UNITED STATES PATENTS

3,174,420 3/1965 Aizawa 355/106

Primary Examiner—John M. Horan
Assistant Examiner—Richard A. Wintercorn
Attorney—Burgess, Ryan & Hicks

ABSTRACT: A dry-type processing device for a photocopying machine having photosensitive paper moving on an endless belt through an operational area for exposure to developing gas passing out of an adjoining chamber. Rollers are provided at either end of the operational area in rolling contact with the endless belt and in sliding contact with the chamber.

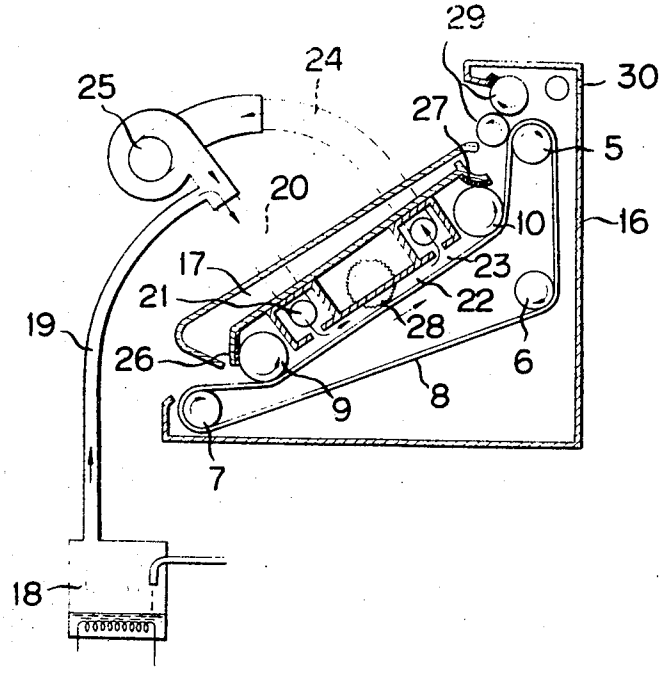

FIG. 1

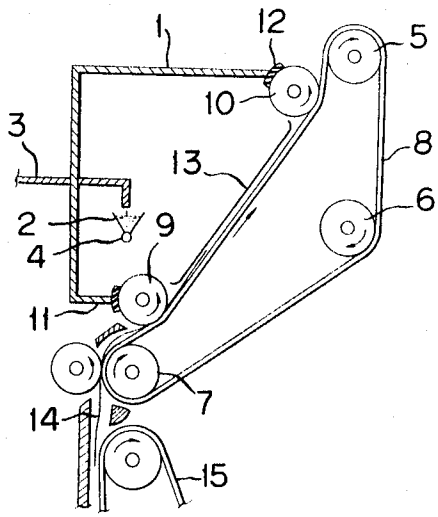

FIG. 2

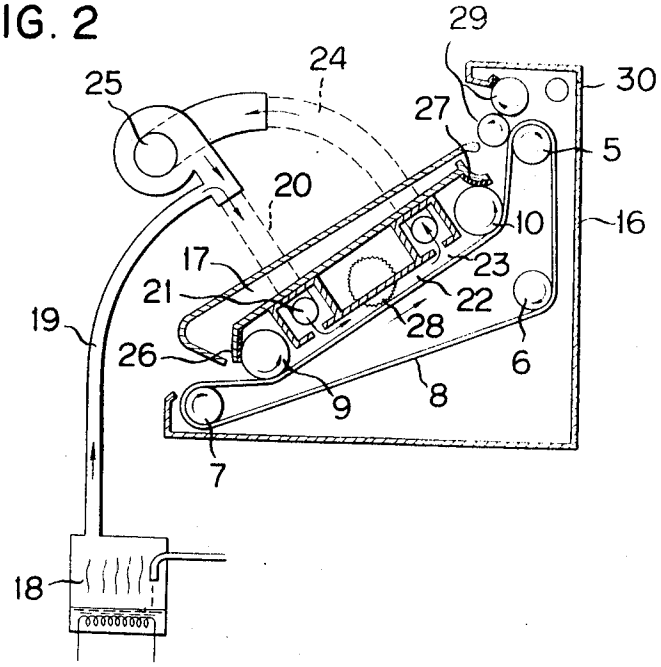

INVENTORS
Minoru Umahashi
Kenzou Ariyama
BY Burgess, Ryan & Hicks
ATTORNEYS

PROCESSING DEVICE FOR PHOTOCOPYING MACHINE

BACKGROUND OF THE INVENTION

The present invention relates to a dry-type processing device for photocopying machine and more particularly a dry-type processing device utilizing ammonia gas for diazo type and the like photocopying machine.

In the conventional processing device of the type described, generally liquid ammonia is supplied into the enclosed casing of the processing section, heated and evaporated so that evaporated ammonia gas may contact with the exposed surface of photosensitive paper moving between the perforated wall of the casing and the endless sealing belt through pores of the perforated wall. Therefore the endless belt is made in sliding contact with the stationary perforated wall of the casing and is further pressed with a considerable pressure against the perforated wall so as to ensure the movement of the photosensitive paper to be processed so that the friction between the endless sealing belt and the perforated wall is relatively high and consequently the driving force of the sealing belt must be increased.

Well known is the processing device of the type in which guide rod members instead of the perforated wall are utilized in such a manner that the exposed surface of the photosensitive paper may contact with ammonia gas freely in the processing casing while the photosensitive paper is moved upon the guide rod members. In this case, the sealing belt is made in sliding contact with the guide rod members as in the case in which the sealing belt is made in contact with the sealing end surfaces of the processing casing so that the friction between the sealing belt and the guide rod members is also high as in the case of the first mentioned conventional processing device.

SUMMARY OF THE INVENTION

In view of the above, the present invention has for its object to eliminate the above described defect encountered in the conventional dry-type processing device, and one of the most important aspects of the present invention resides in the fact that the sliding contact in the conventional processing device is replaced with rolling contact in the present invention.

Another object of the present invention is to provide a dry-type processing device utilizing the rolling contact instead of the sliding contact as described above in which is used a gas for processing.

According to one embodiment of the present invention, sealing rollers are disposed at the front and rear side edges of the enclosed casing of the processing section respectively and a sealing belt is lapped over these sealing rollers.

According to another embodiment of the present invention, processing gas is directed at the processing position in the same direction with that of the movement of the sealing belt.

Other objects and advantages of the present invention will become apparent from the following description of preferred embodiments thereof taken in conjunction with the accompanying drawings.

BRIEF DESCRIPTION OF DRAWINGS

FIG. 1 is a sectional view of a first embodiment of the dry-type processing device of a photocopying machine according to the present invention; and

FIG. 2 is a sectional view of a second embodiment thereof.

DESCRIPTION OF THE PREFERRED EMBODIMENTS

Referring now to FIG. 1, within an enclosed casing 1 of a processing section is disposed an evaporating saucer 2 to which is supplied liquid ammonia from a supply pipe 3. Ammonia supplied to the evaporating saucer 2 is heated by a heating device 4 so as to be evaporated. The right open end of the casing 1 is sealed by means of an endless sealing belt 8 lapped over the peripheries of rollers 5, 6 and 7. The sealing belt 8 is adapted to be driven in the direction indicated by the arrow by for example the roller 5. Between the sealing belt 8 and the casing 1 are disposed sealing rollers 9 and 10 which are rotated by the sealing belt 8 being transported in the directions indicated by the arrows respectively. Sliding contact members 11 and 12 made of for example Teflon are mounted upon the casing 1 for sliding contact with the sealing rollers 9 and 10 respectively. Reference numeral 13 designates a plurality of guide rods spaced apart from each other for guiding the photosensitive paper 14 transferred from the exposure section. A conveyor belt 15 is lapped over the exposure cylinder.

The sealing belt 8 is disposed in rolling contact with the sealing rollers 9 and 10 respectively so that the friction therebetween is remarkably less. The contact pressure between the sealing rollers 9 and 10 and the sliding contact members 11 and 12 of the casing 1 can be reduced because they are not utilized for feeding the photosensitive paper. Consequently, the overall driving force for moving the sealing belt 8 can be made less.

Referring now to FIG. 2 illustrating a second embodiment of the present invention, the developing section is enclosed by means of an outer casing 16 and a double-wall construction member 17. Opposed to the first embodiment, an ammonia gas evaporating saucer 18 is disposed outside of the developing section. Ammonia gas evaporated by the evaporating saucer 18 is supplied into the developing or processing chamber 22 from an opening 21 formed on the end of joined pipes 19 and 20 in such a manner that ammonia gas is directed by a blower 25 into the processing chamber 22 in the same direction with that of the movement of the sealing belt 8. The blower 25 also provides for recirculating the ammonia gas through an opening 23 and a pipe 24 back to pipe 20. In this case, the sealing belt 8 as well as the double-wall construction member 17 both of which define together with the outer casing 16 a space including the processing chamber 22 into which is supplied ammonia gas are disposed in rolling contact engagement with the sealing rollers 9 and 10 as in the case of the first embodiment. That is, the sealing rollers 9 and 10 are in rolling contact engagement with the sealing belt 8 and with the double-wall construction member 17 through sliding contact members 26 and 27 made of Teflon.

In the second embodiment having the construction as described hereinabove, ammonia gas within the processing chamber 22 presses the photosensitive paper against the sealing belt 8 and facilitates the movement of the photosensitive paper because ammonia gas within the processing chamber is made to flow in the same direction with that of the sealing belt 8. Reference numeral 28 designates photosensitive paper guide rollers disposed in spaced-apart relation with each other; 29, a pair of photosensitive paper discharge rollers; and 30, a vent.

According to the present invention as described hereinabove, sealing rollers are interposed between the sealing belt and the casing of the processing section so as to reduce the friction therebetween and to facilitate the transport of the photosensitive paper. Especially when the circulation flow of the processing gas is utilized, the processing device best suited for high-speed processing can be obtained and ammonia gas can be prevented from being condensed or frozen.

The present invention has been so far described with particular reference to the preferred embodiments thereof, but it will be clear that variations and modifications can be effected within the true spirit of the present invention as described hereinabove and as defined in the appended claims.

I claim:

1. A dry-type processing device for processing photosensitive material in a photocopying machine comprising

an operational chamber having an operational developing area along one side thereof;

an endless belt mounted on rollers and positioned to be driven in a predetermined direction adjacent to said developing area and having the photosensitive material positioned thereon;

a pair of sealing rollers located between said operational chamber and said endless belt, said sealing rollers being in contact with and driven by said endless belt, each sealing roller located, respectively, at one end of said developing area; and

a pair of sliding contact members mounted on said operational chamber and located, respectively, in contact with one of said sealing rollers.

2. A dry-type processing device according to claim **1**, in which blower means is provided to force developing gas to flow along said developing area in said predetermined direction.

3. A dry-type processing device according to claim **1**, in which said sliding contact members are formed of Teflon.