(No Model.) 2 Sheets—Sheet 1.

B. M. LONG.

ROTARY ENGINE.

No. 590,581. Patented Sept. 28, 1897.

Fig. 1.

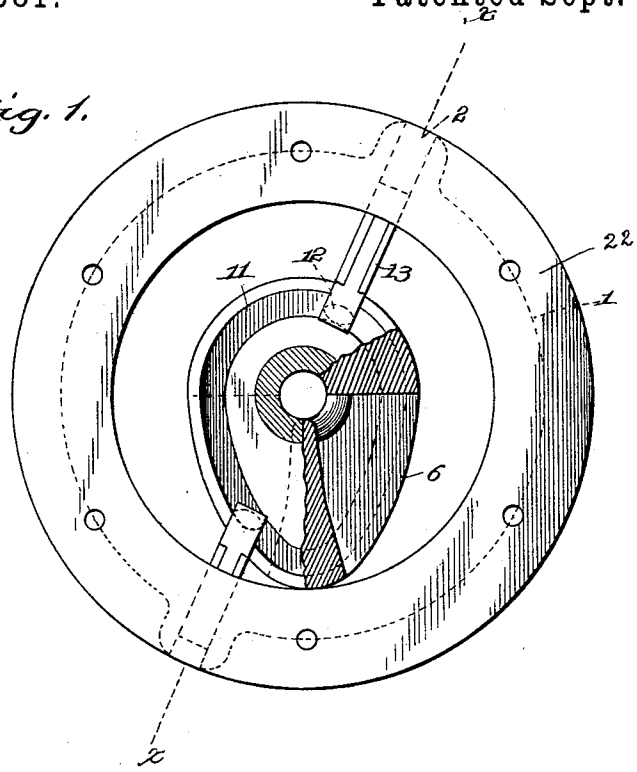

Fig. 2.

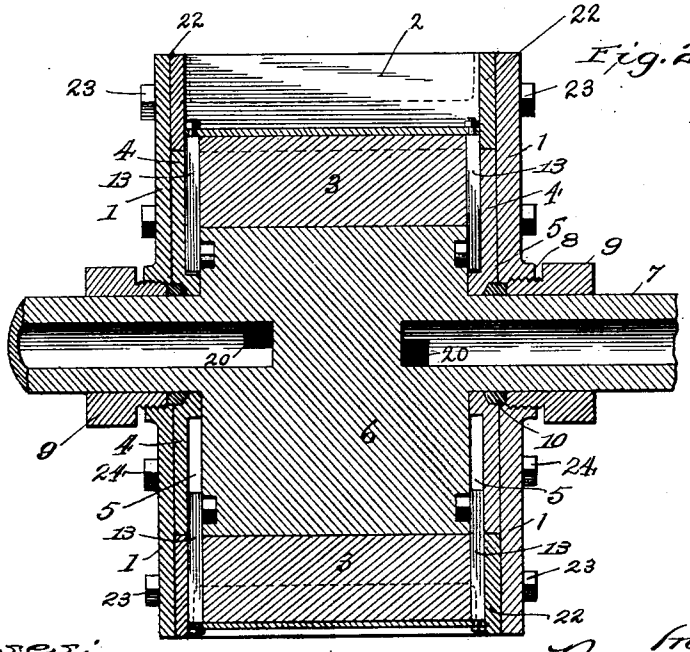

Witnesses:

Harry S. Rohrer.

W. E. Aughinbaugh

Inventor:

Burgess M. Long

By H. M. Sterling

Atty.

THE NORRIS PETERS CO., PHOTO-LITHO., WASHINGTON, D. C.

(No Model.) 2 Sheets—Sheet 2.

B. M. LONG.

ROTARY ENGINE.

No. 590,581. Patented Sept. 28, 1897.

Fig. 3.

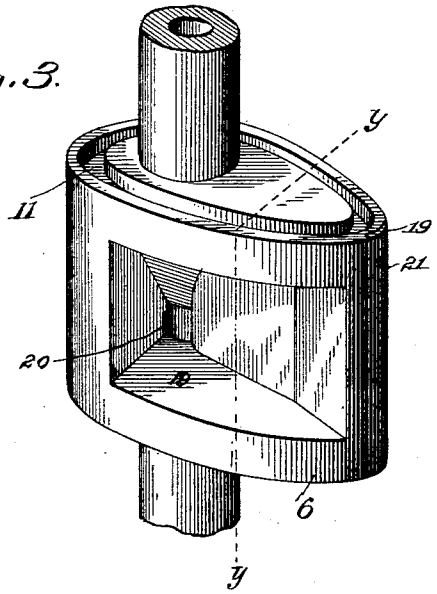

Fig. 4

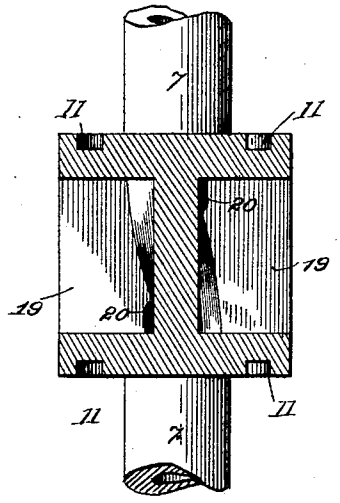

Fig. 5.

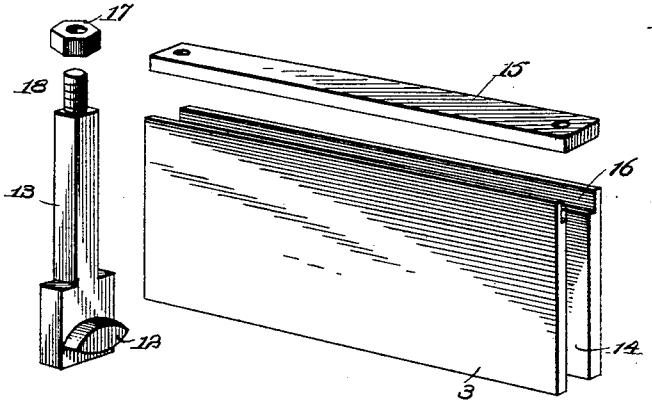

Witnesses:
Harry S. Rohrer.
W. E. Aughinbaugh

Inventor:
Burgess M. Long
By H. W. Sterling
Atty.

THE NORRIS PETERS CO., PHOTO-LITHO., WASHINGTON, D. C.

UNITED STATES PATENT OFFICE.

BURGESS MASON LONG, OF DEKOVEN, KENTUCKY.

ROTARY ENGINE.

SPECIFICATION forming part of Letters Patent No. 590,581, dated September 28, 1897.

Application filed September 29, 1896. Serial No. 607,334. (No model.)

To all whom it may concern:

Be it known that I, BURGESS MASON LONG, a citizen of the United States, and a resident of Dekoven, in the county of Union and State of Kentucky, have invented a certain new and useful Improvement in Rotary Engines, of which the following is a description.

This invention relates to an improvement in rotary engines. Heretofore in rotary engines and in that class employing a rotary eccentric it has been customary to have the cylinder rigidly mounted upon a base and the eccentric to revolve therein and to impart motion to the mechanism to be driven. The objection to this construction has been found to lie in the fact that as the smallest portion of the engine was the driven portion—that is, the eccentric and its attached mechanism—great power was lost both by friction and from the well-known fact that the smaller the area acted upon by the steam the greater the power will be required to produce a given result.

It is the object of the present invention to reverse the construction above referred to by having the eccentric the stationary portion of the engine and the cylinder the driven portion, whereby a greater power will be produced from a given pressure of steam than if the cylinder were stationary and the eccentric driven.

The invention consists in the novel construction and combination of parts of a rotary engine, as will be hereinafter fully described and claimed.

In the accompanying drawings, forming a part of this specification, and in which like numerals of reference indicate corresponding parts, Figure 1 is an end elevation, partly in section, showing the elliptical eccentric, the sliding abutments, and the arms connecting the abutments and the eccentric. Fig. 2 is a transverse sectional view on the line x x, Fig. 1. Fig. 3 is a perspective detail view of the eccentric. Fig. 4 is a transverse sectional view on the line y y, Fig. 3, showing more particularly the arrangement of the respective ports. Fig. 5 is a detached detail view of one of the sliding abutments and one of its arms.

Referring to the drawings, 1 designates the outer cylinder, which is constructed of any suitable material and provided on diametrically opposite sides with chambers or recesses 2, in which work the sliding abutments or wings 3. Fitted within the ends of the cylinder are two heads or plates 4, provided with diametrically opposite recesses or grooves 5, in which work the ends of the abutments, whereby the latter are braced against lateral strain from the impact of the steam and a packing provided which will prevent the escape of steam, as will be hereinafter set forth.

Located within the cylinder is the eccentric 6, which is preferably elliptical in form and is provided at each end with a hub or bearing 7, which may be either integral with the eccentric or secured thereto and serves to support both the eccentric and the cylinder, the said hubs or bearings being suitably keyed to pillow-blocks (not shown) to prevent their rotating. The outer ends of the cylinder are provided with threaded openings 8, in which is screwed a bushing 9, which in conjunction with a packing or ring 10, placed between the end of the bushing and the inner walls of the cylinder-head, serves to form a steam-tight packing. Each end of the eccentric is provided with an elliptical track or groove 11, in which work approximately elliptical projections 12, carried by arms 13, the free ends of the latter being seated in recesses 14 in the sliding abutments, and are held in place by means of a plate 15, which is seated in a recess 16 in the said abutments, nuts 17, engaging threaded ends 18 of said arms, serving to bind the plate and the arms firmly in place.

The hubs or bearings 7 are bored out to a point near the center of the eccentric and form the inlet and outlet for the steam, the movement of the eccentric in one direction causing one of the openings to form the steam-inlet and the other the outlet, and vice versa.

In each of the respective sides of the eccentric is a chamber 19, which terminates in the ends of the bores in the hub with openings 20, which form, respectively, the eduction and induction ports and through which the steam is admitted to the cylinder on one side of the eccentric and escapes through the other. The small end of the eccentric is provided with a removable packing-plate 21, by

means of which the eccentric may be always caused to form a steam-tight joint with the inner walls of the cylinder.

The sliding abutments are actuated in unison when the major axis of the ellipse is in direct alinement with the chambers 2, and as the cylinder revolves and the projections 12 and the arms 13 approach the minor axis the said abutments remain in their respective positions until the major axis is again reached, when the opposite abutment will be thrust out and the other drawn in. Thus at each half-revolution of the cylinder the steam is fed against that abutment located at the small end of the ellipse, while the dead steam is allowed to escape on the opposite side of the remaining abutment. The movement of the abutments is gradual, so that the impact of the steam is not felt until the abutment is in line with the major axis, when the impact causes it to be thrust violently to one side and thus overcome any tendency to a dead-center; but at the same time the motion of the cylinder is regular, so that this engine could be used for driving mechanism where a perfectly steady movement is required.

By reference to Fig. 1, in which the cylinder-heads are shown removed, the flanges 22 will be seen, to which the cylinder-heads are bolted by means of the bolts 23. These flanges form the main frame, in which is provided the chamber 2 for the sliding abutments 3, while their circular interior opening, which is the bore of the cylinder, forms, in conjunction with the cylinder-heads, circular recesses at each end of the cylinder, in which are fitted the plates 4, respectively. The plates 4 are of greater thickness than the flanges 22, in order that they may contact with the end faces of the piston. However, the recesses 5 for the sliding abutments are of such depth as to bring their bottom faces flush with the faces of the flanges, against which the abutments bear at their ends. By this arrangement of plates with relation to the flanges and the cylinder-heads an effectual steam-tight joint is provided, especially at the point where the abutments operate. These plates being the wearing parts of the engine adjustment thereof is readily made with relation to the flanges or the cylinder-heads by means of the bolts 23 and 24, the bolts 23 being the means for holding the cylinder-heads to the flanges as well as allowing repacking for adjustment purposes, should such be required at any time, and bolts 24 being especially for the purpose of securing the plates 4 rigidly to the heads as well as for purposes of adjustment.

If desired, the cylinder may be provided with a band surrounding its periphery, around which a belt may pass, or, if desired, either of the cylinder-heads may be provided with a pulley, either integral therewith or secured thereto by suitable means and project to one side of the engine.

Having thus fully described my invention, what I claim as new, and desire to secure by Letters Patent, is—

1. In a rotary engine, the combination of a revolving cylinder provided on diametrically opposite sides with chambers a stationary elliptical eccentric within the cylinder provided with induction and eduction ports, sliding abutments mounted within said chambers, arms connecting with the abutments and having projections engaging elliptical grooves in the ends of the eccentric, and adjustable packing-plates mounted upon the interior faces of the cylinder-heads, and provided with recesses to receive the arms of the sliding abutments.

2. In a rotary engine the combination with the cylinder, of a piston, sliding abutments controlled by elliptical track-arms seated within recesses in said abutments, and provided with approximately elliptical projections for engaging the said tracks, and a plate seated within a recess in said abutments to which said arms are secured, as and for the purpose set forth.

In testimony whereof I affix my signature in presence of two witnesses.

BURGESS MASON LONG.

Witnesses:
JOHN WHITEHEAD, Sr.,
JIM WHITEHEAD.