(No Model.)

A. H. HARRIMAN & C. B. RING.

CLAW HAMMER.

No. 590,368. Patented Sept. 21, 1897.

Fig. 1

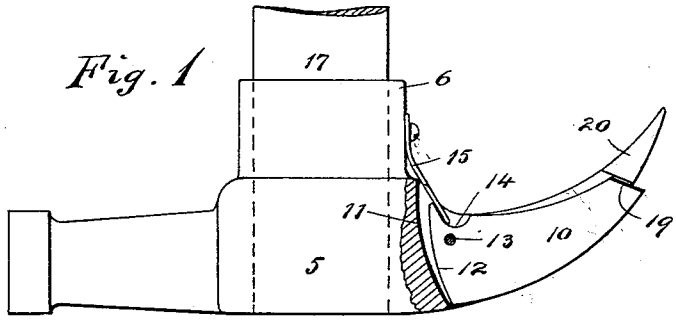

Fig. 2.

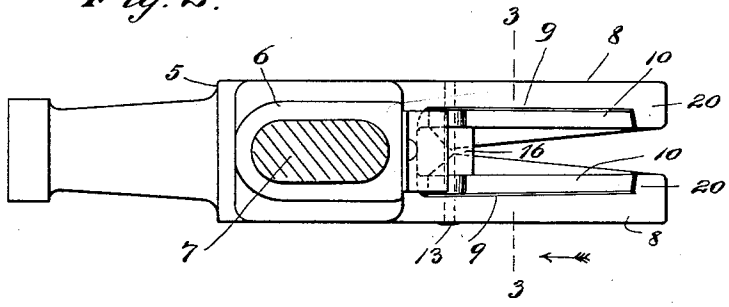

Fig. 3

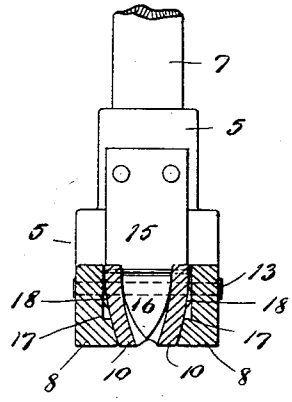

WITNESS

C. Fordfors

C. Gerstl

INVENTORS.

Alonzo H. Harriman.

Charles B. Ring.

BY

Edgar Tate & Co

ATTORNEYS.

THE NORRIS PETERS CO., PHOTO-LITHO., WASHINGTON, D. C.

UNITED STATES PATENT OFFICE.

ALONZO HENRY HARRIMAN AND CHARLES BARTLETT RING, OF ORONO, MAINE.

CLAW-HAMMER.

SPECIFICATION forming part of Letters Patent No. 590,368, dated September 21, 1897.

Application filed March 30, 1897. Serial No. 629,924. (No model.)

To all whom it may concern:

Be it known that we, ALONZO HENRY HARRIMAN and CHARLES BARTLETT RING, citizens of the United States, residing at Orono, in the county of Penobscot and State of Maine, have invented certain new and useful Improvements in Claw-Hammers, of which the following is a full and complete specification, such as will enable those skilled in the art to which it appertains to make and use the same.

This invention relates to claw-hammers such as are usually employed for drawing nails, and the object thereof is to provide an improved device of this class which may be successfully used in drawing nails of all kinds and sizes and also small bolts and for similar purposes; and with this and other objects in view the invention consists in the construction, combination, and arrangement of parts hereinafter described and claimed.

The invention is fully disclosed in the following specification, of which the accompanying drawings form a part, in which—

Figure 1 is a sectional side view of our improved claw-hammer; Fig. 2, a plan view thereof, the handle being shown in section; and Fig. 3, a section on the line 3 3 of Fig. 2.

In the drawings forming part of this specification the separate parts of our improvement are designated by the same numerals of reference in each of the views, and in the practice of our invention we provide a claw-hammer 5 of the usual form, which is provided at one side of the body thereof with a tubular socket, as 6, into and through which the handle 7 is inserted.

The hammer 5 is provided with the usual claws 8, and in said drawings the claws 8 are cut out longitudinally of their inner surfaces, as shown at 9, and mounted in the longitudinal spaces thus formed are supplemental or pivoted jaws 10.

The slot between the claws 8 is carried backwardly near to the tubular socket 6, through which the handle 7 passes, and said slot is curved, as shown at 11, and the supplemental or pivoted jaws 10 are wider at their rear ends than at their forward ends, and the rear ends thereof are also curved, as shown at 12, and passing transversely through the claws 8 and the rear ends of the supplemental or pivoted jaws 10 is a pivot-pin 13.

The upper side of each of the supplemental jaws 10 directly over the pivot-pin 13 is provided with a notch or recess 14, and secured to the tubular socket 6 is a strong plate-spring 15, the lower end of which enters the said notches or recesses, and the object of the spring 15 is to hold the jaws 10 so that the lower surfaces thereof and the lower surfaces of the claws 8 will be in the same circular plane as shown in Fig. 3.

Placed between the rear ends of the jaws 10 is a triangular block 16, through which the pivot-pin 13 also passes, and the object of this block is to hold the jaws 10 in their normal position and to permit of the free use and movement thereof.

The jaws 10 are segmental or circular in form in cross-section, as shown in Fig. 3, and the inner surfaces of the claws 8 are also circular in form in cross-section, and in the operation of the device the jaws 10 are caused to grasp a nail to be drawn in the usual manner, and in the operation of drawing a nail the said jaws 10 will move downwardly slightly, this operation being similar to that of a wedge, and said operation will cause said jaws to more securely grasp and hold a nail, and in Fig. 1 one of said jaws is shown in a slightly-depressed position, so as to illustrate this operation.

The claws 8 are also provided centrally of the inner side thereof with notches or recesses 17, and the jaws 10 are provided with lugs or projections 18, which move in said notches or recesses, and in the operation of the device these lugs or projections will strike the lower walls of said notches or recesses and prevent the jaws from being depressed far enough to break the pivot-pin 13. It will be understood, however, that said notches or recesses and the said lugs or projections are not absolutely necessary, as the form of the claws 8 and of the jaws 10 may be so regulated that when a nail is inserted between said jaws they cannot be depressed far enough to break the pivot-pin 13.

The front ends of the jaws 10 are inclined backwardly and upwardly, as shown at 19,

and the points of the claws 8 are provided with corresponding shoulders or projections 20, and this construction prevents the jaws 10 from being raised above the level of the claws 8.

The lower inner surfaces of the jaws 10 may also be provided with serrations or teeth, if desired, or said inner surfaces of said jaws may be roughened in any desired manner, but this construction forms no part of the invention and may or may not be employed.

Our improved claw-hammer is well adapted to accomplish the result for which it is intended, and it will be apparent that changes in and modifications of the construction described may be made without departing from the spirit of our invention or sacrificing its advantages.

Having fully described our invention, we claim as new and desire to secure by Letters Patent—

1. A claw-hammer the claws of which are cut away on their inner surfaces and provided with supplemental pivoted jaws, said jaws being pivoted between said claws at their rear ends, and said jaws being provided in their upper sides with notches or recesses, and a spring which is secured to the socket of the hammer through which the handle is inserted, and which projects into said notches or recesses, said jaws being also separated at their pivoted ends by a block through which the pivot-pin passes, and the inner surfaces of said claws being curved inwardly and downwardly, and said jaws being correspondingly formed, substantially as shown and described.

2. The herein-described claw-hammer, comprising the combination with a hammer of claws 8 having cut-away portions 9; pivoted jaws 10; pivot-pin 13; a spring 15 adapted to engage notches 14 formed in said jaws; a triangular block 16, said claws being provided with recesses 17, and said jaws being provided with lugs or projections adapted to engage the same, the said jaws being inclined at 19, and the said claws being provided with shoulders 20, substantially as shown and described and for the purpose set forth.

In testimony that we claim the foregoing as our invention we have signed our names, in presence of the subscribing witnesses, this 24th day of March, 1897.

ALONZO HENRY HARRIMAN.
CHARLES BARTLETT RING.

Witnesses:
CHARLES F. NICHOLS,
CHARLES H. RING.