Oct. 15, 1929. W. H. GROVER ET AL 1,731,975

SIGNAL MEANS FOR ELEVATORS

Filed April 1, 1926 5 Sheets-Sheet 1

FIG. 1

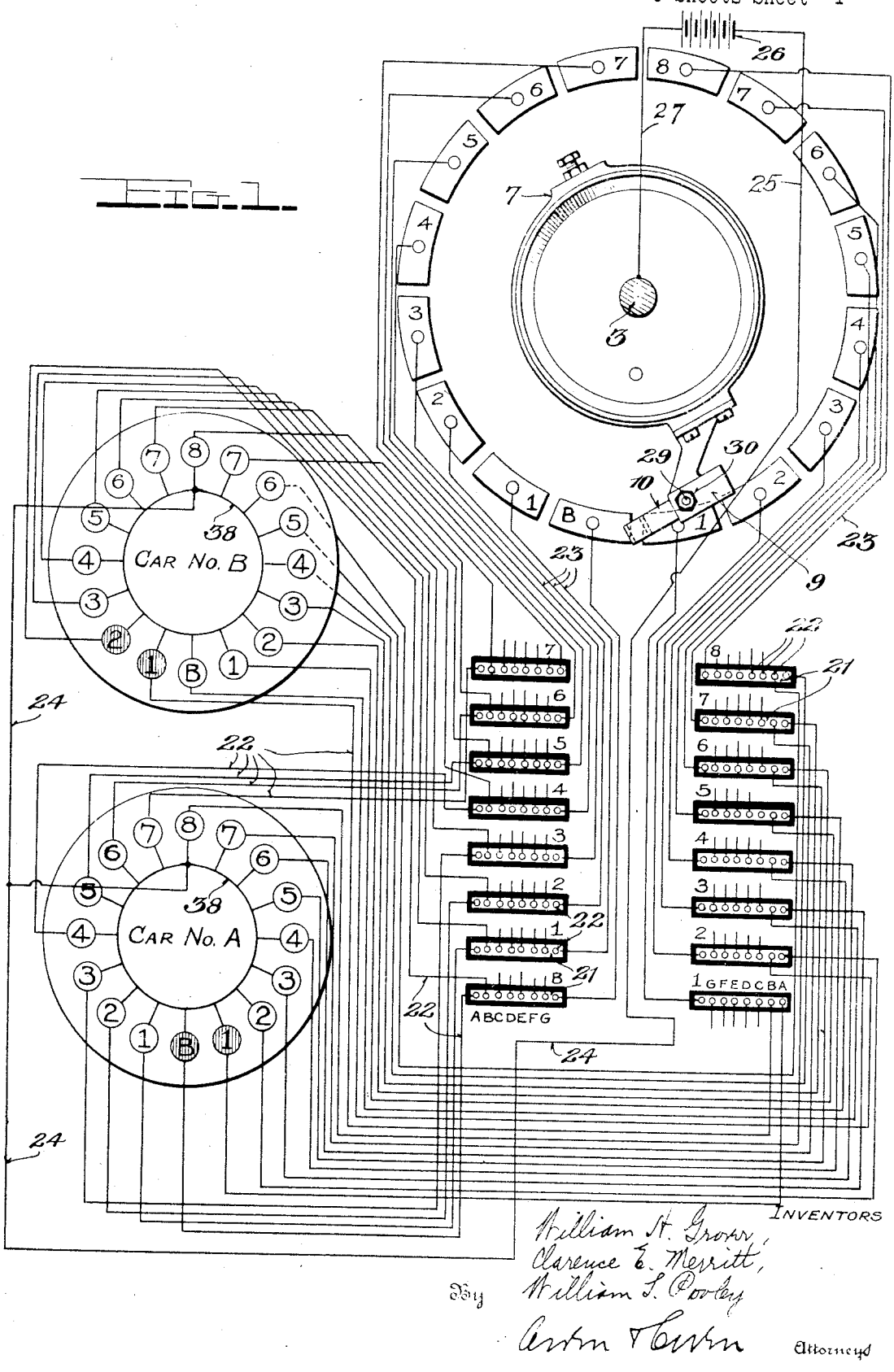


INVENTORS

William H. Grover,
Clarence E. Merritt,
William L. Pooley

By Acton & Acton Attorneys

Oct. 15, 1929. W. H. GROVER ET AL 1,731,975

SIGNAL MEANS FOR ELEVATORS

Filed April 1, 1926 5 Sheets-Sheet 2

Fig. 2

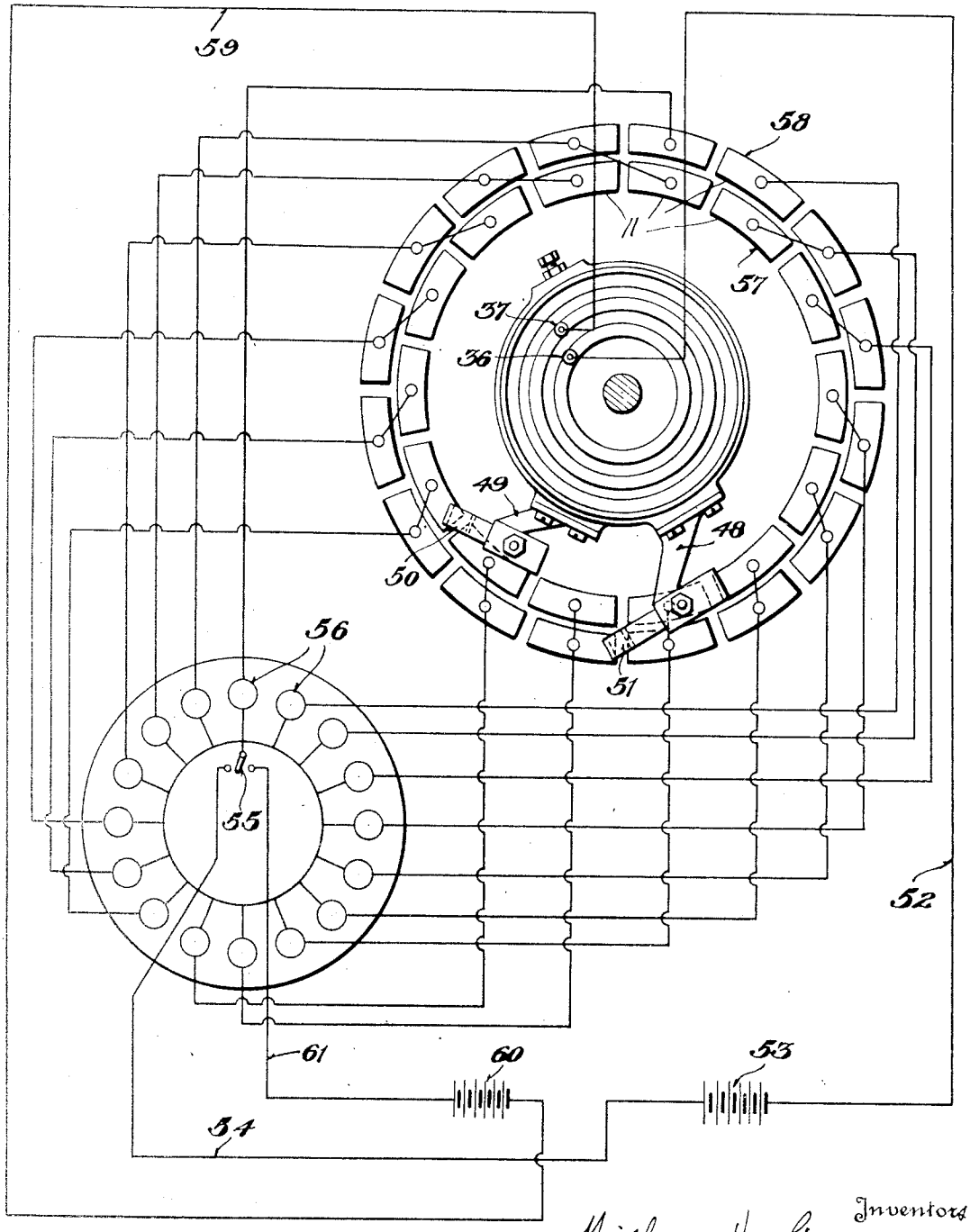


Inventors
William H. Grover,
Clarence E. Merritt
William L. Pooley
By Evan Howson Attorneys

Oct. 15, 1929. W. H. GROVER ET AL 1,731,975

SIGNAL MEANS FOR ELEVATORS

Filed April 1, 1926 5 Sheets-Sheet 3

FIG. 2.

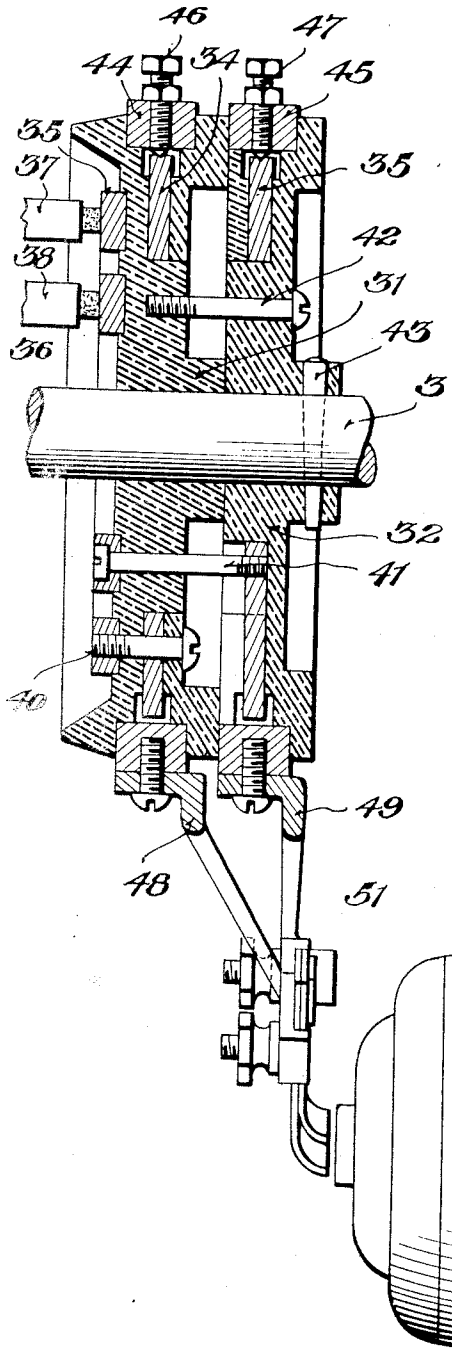


FIG. 3.

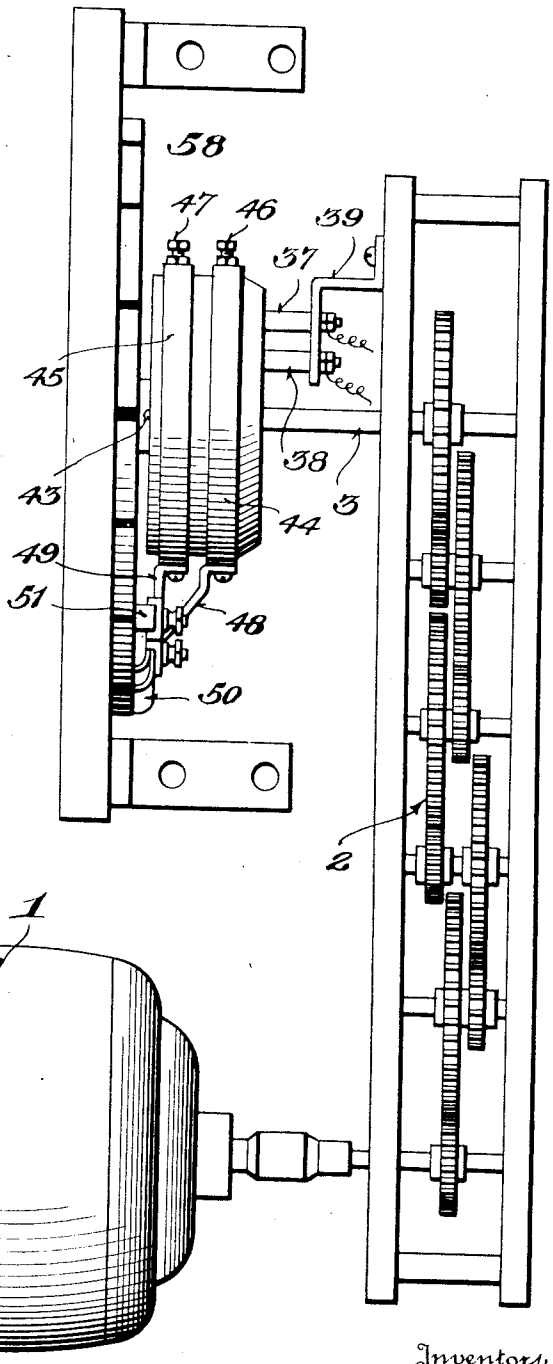


Inventors

William H. Grover
Clarence E. Merritt
William L. Pooley

By Cross & Cross

Attorneys

Oct. 15, 1929. W. H. GROVER ET AL 1,731,975

SIGNAL MEANS FOR ELEVATORS

Filed April 1, 1926 5 Sheets-Sheet 4

FIG. 4.

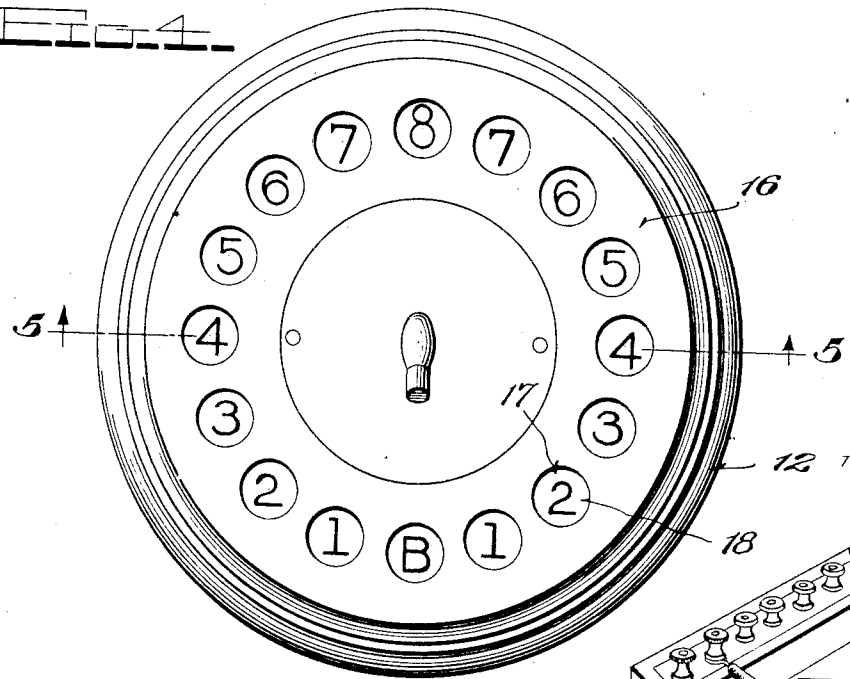


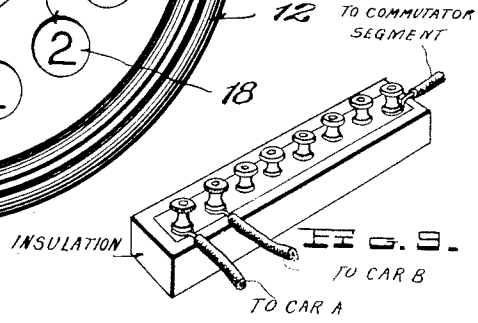


FIG. 9.

FIG. 5.

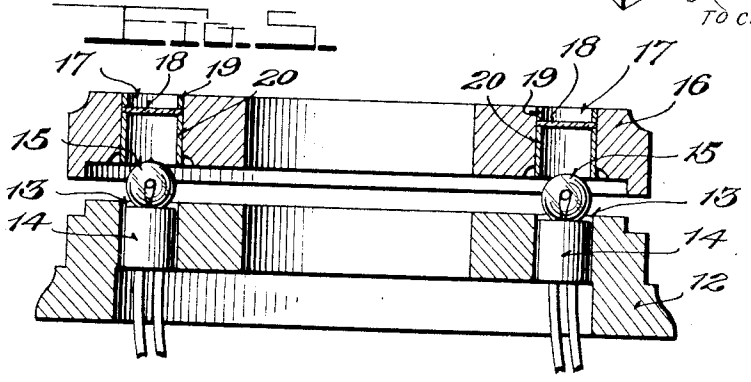


FIG. 6.

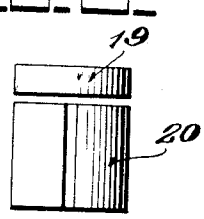


FIG. 8.

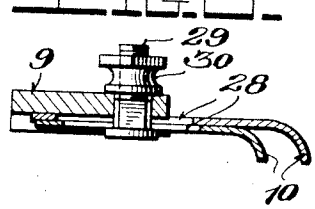


Inventors

William H. Grover,
Clarence E. Merritt

By William S. Pooley

Attorneys

Oct. 15, 1929. W. H. GROVER ET AL 1,731,975

SIGNAL MEANS FOR ELEVATORS

Filed April 1, 1926 5 Sheets-Sheet 5

Fig. 9.

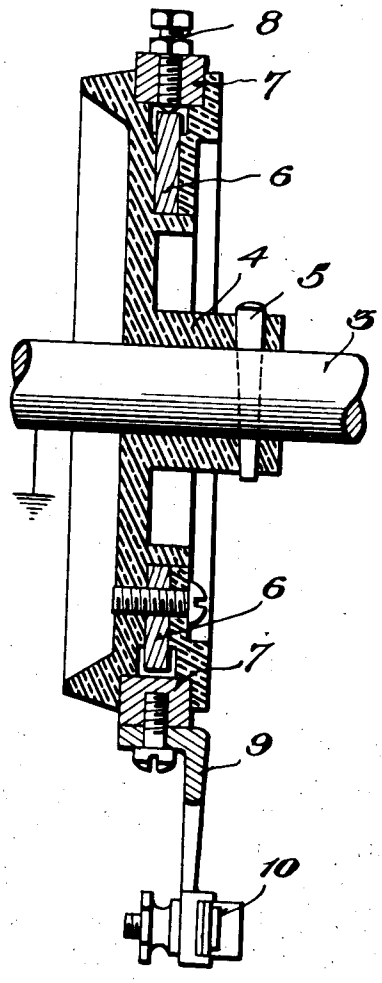


Inventors
William H. Grover
Clarence E. Merritt
William L. Pooley
By Cotton & Cotton
Attorneys

Patented Oct. 15, 1929 1,731,975

# UNITED STATES PATENT OFFICE

WILLIAM H. GROVER, OF MAUMEE, AND CLARENCE E. MERRITT AND WILLIAM S. POOLEY, OF TOLEDO, OHIO

## SIGNAL MEANS FOR ELEVATORS

Application filed April 1, 1926. Serial No. 89,047.

This application is a continuation in part of an application for patent for signal means for elevators, bearing Serial No. 490,559, and filed August 8, 1921.

The invention relates to signal systems and particularly to one for use in connection with a bank or battery of elevators to designate to the operator of each elevator when his car should arrive at, how long it should remain, and when it should leave successive points in a run, and the direction it should travel.

In stores, office buildings, and other buildings employing banks of elevators, it is customary to use what is known as the "manual system" of starting. With this system a starter stands on the main floor and dispatches the cars from such floor at certain intervals. In some cases, especially where five or more elevators are employed, this system is inefficient and expensive in operation, and the starter has no control over an operator after he leaves the main floor until he arrives again at the main floor. It is found that out of the different starting combinations in a bank of elevators, using the manual system of starting, the combination most efficient is to have part of the elevators going up while the others are going down. A complete analysis of this arrangement of dispatch shows that on many floors, under ideal conditions, the traffic must frequently wait intervals that exceeds 100 seconds, while at other times several cars will be found at a particular floor at one time. This system of starting is also objectionable due to the waste energy required to stop and start the elevators and as most power is sold on a maximum demand basis, owners are paying a much higher maximum charge than is necessary.

The object of our starting means is to overcome the above and other objections incident to the starting system heretofore used, by the provision of an automatic starting system which will successively indicate to each operator when his car should start from any floor, and whether up or down, also when it should be at each succeeding floor during a complete round trip, so that an operator knows at any period in a trip where his car should be and which direction he should be going at such period, thus providing for a more efficient running of the elevators and insuring more trips in a day and the carrying of a greater number of passengers than is possible with the starting systems heretofore used, of which we are aware.

The invention is fully described in the following specification, and while in its broader aspect it is capable of embodiment in numerous forms, a preferred embodiment thereof is illustrated in the accompanying drawings, in which:

Fig. 1 is a wiring diagram for a starting system embodying the preferred form of our invention, with two cars only shown in connection with the diagram.

Fig. 2 is a wiring diagram for a starting system embodying the preferred form of our invention, which shows one car capable of making two runs of different lengths.

Fig. 3 is a plan view of our preferred form of master switch and operating means therefor, as used with the wiring diagram shown in Fig. 2.

Fig. 4 is a face view of an indicating dial of the system.

Fig. 5 is a sectional view taken on the line 5—5 of Fig. 4.

Fig. 6 is an elevation of the two bushing members secured within each indicating opening of the dial.

Fig. 7 is a sectional view through the master switch illustrated in Fig. 3, showing the brush carrying switch arms and means for holding the said arms in the desired adjusted position.

Fig. 8 is a sectional view of the outer end of a switch used with the circuit illustrated in Fig. 1 of the drawings.

Fig. 9 is a perspective view of the binding posts of the branch blocks.

Like characters of reference are used throughout the following specification and the accompanying drawings to designate corresponding parts.

The signal system or means embodying the same consist generally of three parts, a master switch, an indicator for each elevator of a set, and a connecting board.

The master switch broadly comprises a

commutating switch having a circular series of spaced contacts of segmental form and insulated from each other, the contacts being equidistantly spaced and cooperating with suitable insulating spacing therebetween to form a complete commutating ring. A separate contact segment is provided for each story or floor landing or regular elevator stop in the building, less two figuring both the up and down trips, so that if the building has nine stories or floors, or in the case of the present illustration, eight stories and a basement, sixteen segments are provided in the commutating ring. The reason that the number of segments do not correspond to the number of stops in a trip is that the first and last stories or floors each answer for two stops. In other words, the first floor answers for the first stop on the up trip and the last stop on the down trip, and the same with respect to the upper floor.

The more simple and modified form of our invention is illustrated in Figs. 1 and 9 of the drawings, and will be first described.

An operating motor 1 connects through a train of reducing gears 2, with the shaft 3 upon which the master switch is carried.

By referring to Fig. 9, it will be seen that a bushing 4 of insulating material is secured to the shaft 3 by means of the key 5. The bushing 4 is provided in a peripheral slot in which the contact ring 6 is housed. A switch arm carrying ring 7 is arranged concentrically about the contact ring 6, and in contact therewith, and is free to move about the same the full 360 degrees, and may be locked in the desired setting by means of the lock set screw 8. One or more switch arms 9 are detachably secured to the ring 7 and are slotted at their outer ends to receive the resilient brushes 10.

The indicating dial or element of the apparatus is provided with as many signal devices in the present instance, electric lamps, as there are stops for the elevator, or in other words, as there are segments 11 in the switch, and these lights or signal devices may have any desired arrangement, being shown in the present instance, as circularly arranged. One of these indicators is disposed in each car of the set in convenient view of the operator.

The indicator employed in the present instance comprises a circular base member 12 having a circular series openings 13 therein for receiving respective sockets 14 for electric lamps 15, and a top plate 16 sets over the base plate 12 and is provided therethrough with openings or windows 17 in register with the openings 13 of the base plate and for receiving the outer end portions of the lamps 15. Each opening 17 is provided with a transparent member 18 without the lamp 15 and provided with a numeral or designation indicating a particular floor or stop of the elevator, the stops in the illustration running from the basement floor up to the eighth floor and then down to the basement, as shown in Fig. 4. The transparent members 18 are held in position within the openings 17 by inner and outer bushing members 19 and 20 respectively, the latter being of a size to closely fit the opening, and the former being longitudinally split and normally of a size larger than the opening, to require a compression of the bushing before being inserted in the opening. It is preferable to have either the transparent members 18 or the lamps 15 of white for the stops indicated during an upward run of an elevator, and to have the transparent members 18 of red for the stops indicated during a down trip of an elevator, thus establishing a color indication of direction at all times.

A connecting board is interposed between the indicator elements and the master switch and has as many insulated connecting blocks 21 as there are commutating segments 11 in the master switch, and each block is provided with as many binding posts 22 as there are cars in the system. For instance, if there are seven cars in the system, each block will have seven binding posts 22 as shown, with each connection of a block in circuit with a certain commutating segment 11 of the switch and with a different signal lamp of each of the several elevators of the system. Each block has a designation at its inner end corresponding with the designation of the commutating segment 11 with which it is connected by a respective wire 23, and each different connection 22 of a block has connection with a respective lamp of each indicator through a common wiring 24 with a battery line 25 leading to one side of a battery 26 or other source of electrical energy supply. The other side of the battery is connected by a lead 27 to the shaft 3 of the master switch. The connections 22 of some of the blocks 23 have reference letters at the sides thereof indicating the respective cars with which the connections are associated. Some of the cars and the wiring are omitted from the diagram, however, in order to avoid confusion.

In the operation of the signal system embodying the modified form of invention it is only necessary to close the battery circuit and start the motor 1 or other means which drive the switch arm carrying ring 7 of the switch. If the ring 7 is in position for its brush 10 to have contact with the commutating signal B of the master switch, the battery circuit to the connecting block B will be closed and the connections in turn from such block to the respective lamps or indicator means to the different cars of the bank will also be closed. If the arrangement is such that the cars should be approximately two floors apart during a run, the car A will have its basement light on, the car B will have its second floor light on, the car C will have its 4th floor light on, the car B will have its 6th floor light on, and so on throughout all

of the elevators of the bank, thereby indicating to the operator in each elevator where his car should be when the commutating segment B of the switch is in closed circuit. As the brush passes from the contact segment B to the segment 1, the indicator lights of the different elevators in circuit in segment B will go out and the next light in order on each elevator should then be on, by reason of the switch segment 1 being disposed in the closed circuit, and indicate that each elevator should be at or start for the next stop. It is preferable that the brush 10 will remain in contact with each segment until after it has made contact with the next segment in order, as this facilitates the running of the car by the operator, for after making a stop he can remain at such stop until the light for the next story comes on which is the signal to leave the floor at which stopping and proceed to the next floor. As the switch ring 7 continues its revolution the indicating of the stops for each elevator in the bank is automatically effected so that each operator can at all times tell where his car should be at any period in a run and can therefore gage the running of his elevator accordingly so that his stops will correspond as nearly as possible to the stops indicated by the indicator in his car. It will be understood that if desired, each elevator of a bank may be provided with an individual switch, and in some cases this is found desirable.

It is evident that the signal system may be regulated to cause a faster or slower running of the elevators as may be desired, the change of speed being accomplished by changing the speed of revolution of the switch ring 7.

It is found in practice that with this system cars will not lap or run ahead of schedule time during runs; that a more uniform and efficient running of all of the cars of a bank is effected, and that more trips and the carrying of a greater number of passengers in a day is accomplished, and in addition the service of a starter is eliminated. It is also found that a material saving in power is effected as the load incident to a number of cars being at one floor and starting at the same time is avoided, and it also prevents all cars either going up or coming down at the same time.

By referring to Fig. 8 of the drawings it will be noted that the brushes 10 are slotted at 28 and are adjustable within the limits of the slots, to provide for the correct timing of the apparatus with respect to adjacent segments 11 of the commutating ring. Bolts 29 extend upwardly through the slots in the brushes 10 and up through the switch arms 9 and are held in place by means of the threaded nuts 30.

In some buildings it is desired at certain times of the day to cut out the top floor or several top floors, as for instance, where a restaurant or dining room is located on the top floor of the building and patrons are therefore travelling to and from such floor only during meal hours. In such case the commutating switch of the signal means may have two sets of contact segments, one including the segments for all of the floors and the other excluding the segments for the floors to be cut out. A wiring diagram of a signal means including this changeable feature in association with one indicator unit is illustrated in Fig. 2. In this figure the outer set of segments correspond in number to the full number of stops or floors for an elevator and the inner set of segments correspond in number to the reduced number of floors or stops for an elevator. The segments of both sets are wired in the same manner to the indicator means as hereinbefore described, except that the indicators for the floors adapted to be cut out are in connection only with the extra segments of the outer set.

In Figs. 2, 3 and 7 we have illustrated the preferred form of our invention which will now be described. The preferred form of master switch comprises a pair of coupled insulated bushings 31 and 32, which are provided with peripheral slots in which the contact rings 34 and 35 are housed. Concentrically arranged collector rings 35 and 36 are fixed on the outer face of the bushing 31, and are adapted to make contact with the brushes 37 and 38, which in turn are supported by suitable bracket 39. The collector rings 35 and 36 are electrically connected with the contact rings 33 and 34, respectively, through the bolts 40 and 41. One or more bolts 42 are employed to hold the two bushings in couped relation, while a key 43 extends through a reduced portion of the bushing 32, and through the shaft 3 to retain the several parts in fixed position. A pair of switch arm carrying rings 44 and 45 are arranged concentrically of the contact rings 33 and 34 about the bushings 31 and 32, and are free to move about the same the full 360 degrees, and may be locked in the desired setting by means of the lock set screws 46 and 47.

Switch arms 48 and 49 are detachably secured to the arm carrying rings 44 and 45, and are notched at their outer ends to receive the resilient brushes 50 and 51.

The master switch cooperates with two concentrically aranged series of spaced contact segments 11 which are insulated one from the other and are clearly illustrated in Fig. 2 of the drawings.

The brush 38 contacting with the collector ring 36 is connected through the wire 52 to a battery 53 or source of electrical energy supply and through the wire 54 and switch 55 with the sides of the elevator signal devices 56 which are in common circuit. The other sides of each signal device 56 is connected

to respective segments of the commutating rings 57 and 58, the signal devices for the floors adapted to be cut out having connection along with the extra segment of the commutating ring 58. The other circuit is connected through a wire 59 with a battery or source of elecrical energy supply 60, which is connected by a wire 61 and the switch 55 to the common side of the signal devices 56. The switch 55 is common to both battery circuits and when moved to close one circuit opens the other.

It is to be understood that in the preferred form of the invention, as illustrated in Figs. 2, 3 and 7, the branch blocks 21 are not used. There is a separate commutator, with its rings 57 and 58, for each car. All of these commutators are traversed by the same shaft 3 and their segments are connected directly to the signals 56 on the respective cars, as shown in Fig. 2. There is a brush 50 and a brush 51 associated with each commutator. In order to avoid confusion, the wiring for one car only is shown in this figure, but it will be readily understood that the wiring may be duplicated for each car and all may be controlled by a common switch 55.

We wish it understood that our invention is not limited to any specific construction, arrangement or form of the parts, as it is capable of embodiment in numerous forms without departing from the spirit of the claims.

What is claimed is:—

1. In a signal apparatus, a commutator having at least one row of segments, a switch arm therefor, a branch block having a plurality of connected contacts, the contacts in each block being connected to a different contact on the commutator, a plurality of elevator cars, a plurality of signals on each car distinctive to each floor, and means for connecting one signal in each car to a contact on the same branch block.

2. In a signal apparatus, a commutator having at least one row of segments, a switch arm therefor, a branch block having a plurality of connected contacts, the contacts in each block being connected to a different contact on the commutator, a plurality of elevator cars, a plurality of signals on each car distinctive to each floor, and a removable connection between said signals and branch block.

3. In an elevator signal apparatus, a bank of elevators each operating to stop at a plurality of floors at each of its up and down trips, signalling means carried by each elevator including a signal for each of said floors for both the up and down trips, circuits for each of the signalling means and the signals thereof, switching means including a plurality of segments one for each of the floors of both the up and down trips, and an arm engageable with the segments, a connecting board comprising a plurality of branch blocks each including a plurality of connected contacts the contacts of each group being connected to a different segment of said switching means for permitting the selective connection of any of the contact blocks to any of the signals on the elevators in predetermined order, and means for effecting uniform drive of the arm of the switching means.

4. In an elevator signal apparatus, a bank of elevators each operating to stop at a plurality of floors at each of its up and down trips, circuits for each of the signalling means and the signals thereof, switching means including a plurality of segments one for each of the floors of both the up and down trips, and an arm engageable with the segments, a connecting board comprising a contact member for each segment, for permitting the selective connection of any of the contact members to any of the signals on the elevators in predetermined order, and means for effecting uniform drive of the arm of the switching means.

5. In an elevator signal apparatus, a bank of elevators each operating to stop at a plurality of floors at each of its up and down trips, signalling means carried by each elevator including a signal therefor, switching means including a plurality of segments one for each of the floors of both the up and down trips and an arm engageable with the segments, a connecting board for permitting the selective connection of any of the signals on the elevators in predetermined order, means for effecting uniform drive of the arms of the switching means, and means for enabling selective variation of the time for each of the stops of each elevator.

6. In an elevator signal apparatus, a bank of elevators each operating to stop at a plurality of floors at each of its up and down trips, signalling means carried by each elevator including a signal for each of the floors for both the up and down trips indicating the time at which that car should arrive at each of the floors, circuits for each of the signalling means, switcing means including a plurality of segments one for each of the floors of both the up and down trips for operating each of the signalling means, and means enabling distribution of the signals for each of the cars to space said cars according to a predetermined schedule and selective cutting in or cutting out of one or more of the elevators of the bank of elevators and redistribution of the signals of the remaining elevators conforming to the altered schedule.

In testimony whereof, we have hereunto signed our names to this specification.

WILLIAM H. GROVER.
CLARENCE E. MERRITT.
WILLIAM S. POOLEY.