March 30, 1926. 1,579,107

F. L. HANLE

LOCKING DEVICE

Filed April 11, 1925

Fig. 1.

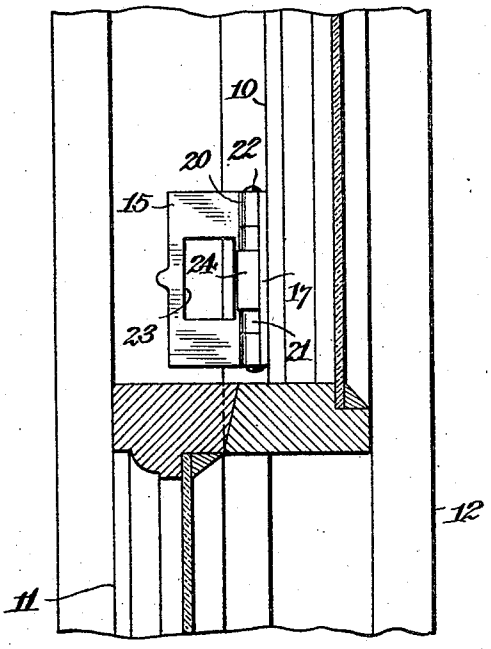


Fig. 2.

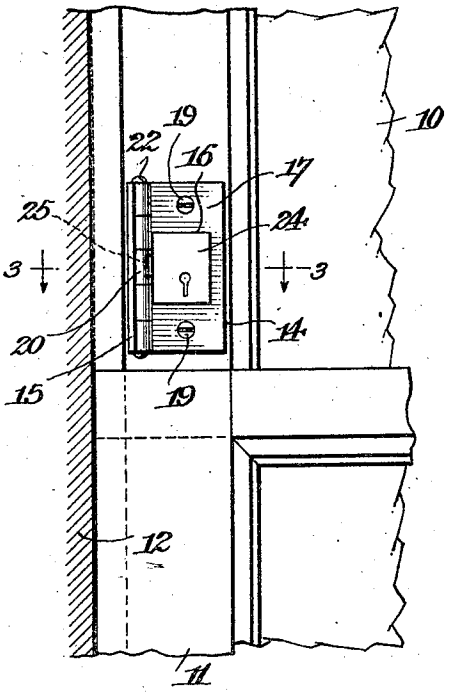


Fig. 3.

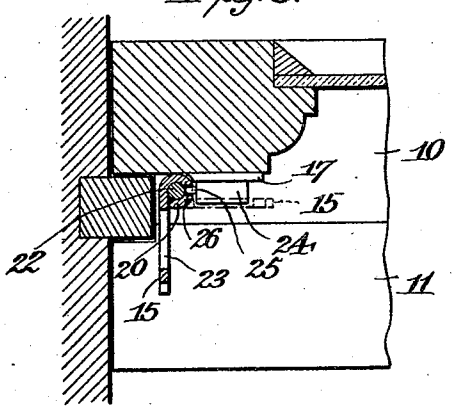


Fig. 4.

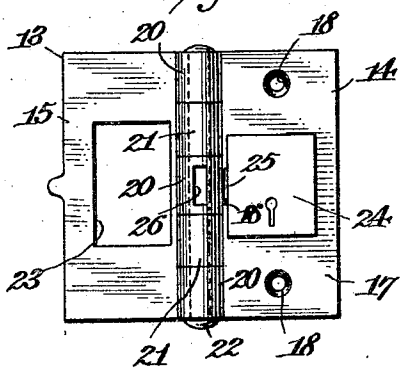


WITNESSES

Bernard Aebly

Chris Feinle.

INVENTOR

Frank L. Hanle.

BY Munn & Co

ATTORNEYS

Patented Mar. 30, 1926. 1,579,107

# UNITED STATES PATENT OFFICE.

FRANK LUTHER HANLE, OF ARLINGTON, NEW JERSEY.

## LOCKING DEVICE.

Application filed April 11, 1925. Serial No. 22,393.

*To all whom it may concern:*

Be it known that I, FRANK L. HANLE, a citizen of the United States, and a resident of Arlington, in the county of Hudson and State of New Jersey, have invented new and useful Improvements in Locking Devices, of which the following is a full, clear, and exact description.

This invention relates to locking devices and has particular reference to the class of devices which are used in conjunction with closures either to prevent or to permit relative movement of the closures.

The principal object of the present invention is the production of a device capable of being used in conjunction with two closures in a manner in which the device will be carried by one closure, and which will provide means for preventing the relative movement of the closures, which will permit the relative movement of the closures, and which can be employed to permit relative movement of the closures to a limited extent.

From the viewpoint of construction, an object of the present invention is to produce a simplified device for carrying out the results hereinbefore mentioned.

Some of the other objects of the invention are: to produce a device of the character mentioned which will be inexpensive; one which may be readily applied for use, and one which will be durable and effectual.

In the drawing to which reference is had in conjunction with the following specification,—

Figure 1 shows a portion of a window frame and portions of window sashes or closures, with the device of the present invention applied to one of the closures, preferably the upper one, and showing the obstructor of the device locked in an obstructing position;

Fig. 2 is a front elevation of portions of the window sashes and a part of the window frame with the window sashes in the same relative position as they are shown in Fig. 1, with the obstructor in its obstructing position;

Fig. 3 is a horizontal sectional view taken on the line 3—3 of Fig. 2;

Fig. 4 is a front view of the device detached and in which the parts are relatively disposed to more clearly show their constructions respectively.

As stated, the device of the present invention is to be used in conjunction with closure members capable of being moved relatively to opened and closed positions either to prevent the relative movement of the closures or to permit of their moving relatively, and in the present instance the closures are in the form of window sashes 10 and 11, portions of which are shown. The window sash 10 is the upper window sash, whereas the window sash 11 is the lower window sash, and said sashes are arranged for relative sliding movement in a window frame, a portion of which is shown at 12. The device of the present invention is capable of being attached to one of the window sashes, and the position at which it is attached to the window sash will control the extent to which the other window sash may be moved relatively to an opened position. The device may be so arranged as to prevent movement altogether, or it may be positioned to permit movement within a limited degree.

The device 13, generally stated, comprises attaching means 14, a movably mounted obstructor 15, and locking means 16. In the present instance, the attaching means is in the form of a plate 17 having holes 18 for the reception of suitable fastening elements, such as screws 19. The obstructor 15 is in the nature of a plate or flat member and is hingedly connected to the plate 17 by virtue of apertured lugs 20 and 21, respectively, on the plates 15 and 17, and a pin 22 which extends through the lugs. The plate 15 has an opening 23 therein for a purpose to appear. The locking means 16 is intended for locking the obstructor 15 in an obstructing position in which the same will be disposed at a right angle with respect to the plate 17, as shown most clearly in Fig. 3. The said locking means 16 will include a key operable lock 24 of any preferred construction having a bolt 25. The lock 24 is attached to the plate 17. One of the lugs 20 forming a part of the obstructor 15, has a hole 26 therein, the position of the hole 26 being such that when the obstructor is disposed at a right angle with respect to the plate 17, the said hole will be in a position to accommodate the free end of the bolt 25, as shown in Fig. 3. The bolt is projected into the hole 26 by the use of a suitable key (not shown), which also serves for withdrawing the bolt to permit the obstructor 15 to be moved to the position shown by dot-and-dash lines in Fig. 3. When the obstructor is locked in the position shown in

full lines in Fig. 3, the lower window sash 11 will have a very limited movement relative to the upper window sash 10. When the obstructor 15 is moved to the position shown in dot-and-dash lines in Fig. 3, either of the window sashes 10 and 11 may be moved relatively to its limits as defined by the window frame.

From the foregoing it will be apparent that the device of the present invention may be readily applied for use; that it is simple of construction, and that it embodies a novel form of locking means. It is to be understood that while the device has been shown in conjunction with two window sashes, it may be used in conjunction with other closures, such as doors.

What is claimed is:

1. A device comprising an attaching plate, an obstructor hingedly connected to said attaching plate, and locking means carried by the attaching plate for locking said obstructor in an obstructing position, said obstructor having an opening therein to accommodate a part of the locking means and thus permit the obstructor to be disposed in an unobstructing position.

2. A locking device comprising an attaching plate, an obstructor pivotally carried by said attaching plate, a lock including a bolt carried by said attaching plate, said obstructor having a hole in a portion thereof, the free end of said bolt being movable into and out of said hole, the obstructor being held in an obstructing position substantially at a right angle with respect to said attaching plate when the bolt is disposed in said hole, and said obstructor being movable to an unobstructing position side by side with respect to said attaching plate when said bolt is withdrawn from said hole.

FRANK LUTHER HANLE.