O. G. CLAY.

CELLAR DOOR.

APPLICATION FILED JUNE 24, 1912.

1,068,856. Patented July 29, 1913.

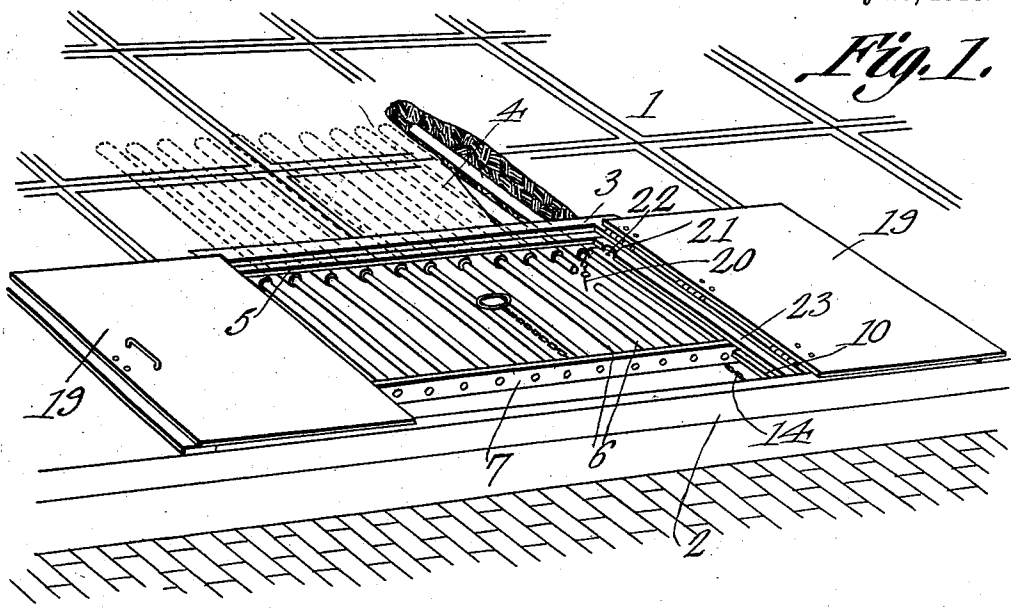

Fig. 1.

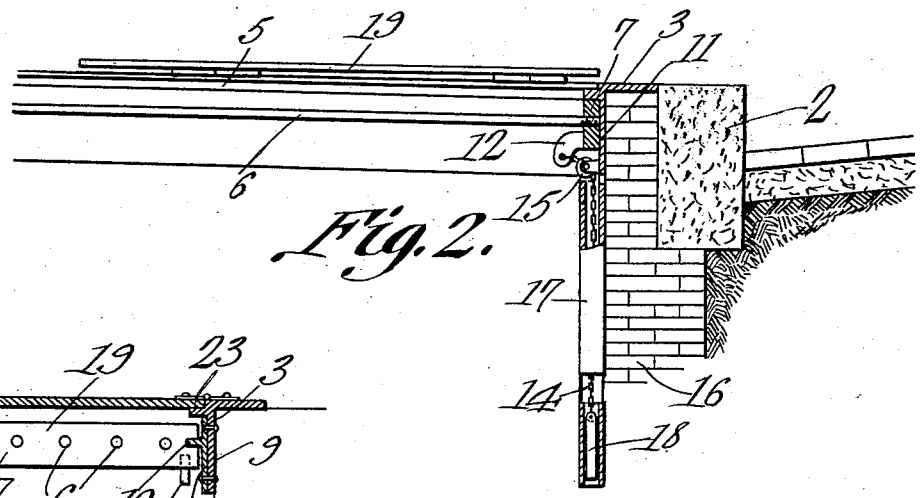

Fig. 2.

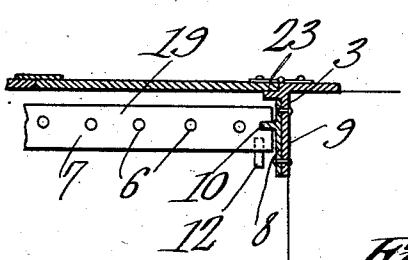

Fig. 3.

Odin Greene Clay,
Inventor

Witnesses
J. P. Tomein
D. H. Wilson

by C. A. Snow & Co.
Attorneys

COLUMBIA PLANOGRAPH CO., WASHINGTON, D. C.

UNITED STATES PATENT OFFICE.

ODIN G. CLAY, OF WASHINGTON, DISTRICT OF COLUMBIA.

CELLAR-DOOR.

1,068,856. Specification of Letters Patent. Patented July 29, 1913.

Application filed June 24, 1912. Serial No. 705,628.

To all whom it may concern:

Be it known that I, ODIN G. CLAY, a citizen of the United States, residing at Washington, District of Columbia, have invented a new and useful Cellar-Door, of which the following is a specification.

It is the object of this invention to provide a grating of novel and improved construction, adapted to be mounted for reciprocation in a casing, of the form commonly employed to carry cellar doors, the entire device being adapted to be disposed in horizontal position, in the sidewalk, novel means being provided for mounting the grating for horizontal reciprocation in the casing, and for normally holding the grating in a position to close the casing; other and further objects being made manifest hereinafter as the description of the invention progresses.

The drawings show but one form of the invention, and it is to be understood, that, within the scope of what is claimed, various changes in the form, proportions and size of the parts may be made without departing from the spirit of the invention.

Similar numerals of reference are employed to denote corresponding parts of the several figures of the drawings, in which:—

Figure 1 shows my invention in perspective, parts being broken away better to illustrate the structure. Fig. 2 is a fragmentary section of the device, parts being in elevation; and Fig. 3 is a fragmentary section in a plane at right angles to the cutting plane of Fig. 2, parts being in elevation.

In the drawings, the numeral 1 denotes the sidewalk, and the numeral 2 the curbing.

It is to be understood that my invention may be mounted in any suitable location between the gutter and the building line, but, in the present instance I have located the same relatively near to the curbing 2.

A casing 3, is provided, carrying doors 19. There may be one or more of the doors, and they may be mounted to operate in any suitable manner. In the present instance, two doors are shown, and they are hingedly connected with the ends of the casing 3. The rear wall 5 of the casing 3 serves as an attaching member for the extremities of a plurality of tubular members 4, which, as shown in Fig. 1, extend rearwardly from the casing into the sidewalk 1. Mounted for reciprocation in the tubes 4 are a plurality of rods 6, with the forward ends of which is rigidly assembled a bar 7, having notches in its ends, whereby the bar may be slidably mounted, upon the flanges 10 of guides 8 which are secured in any desired manner to the sides 9 of the casing 3, the construction being such that the grating, comprising the bar 7 and the rods 6 is adapted to reciprocate upon the guides 8 beneath the doors 19.

Yieldable means are provided for normally holding the grating in abutment with the front 11 of the casing 3 and these means include a lug 12 which projects rearwardly from the bar 7. To this lug 12 is connected one end of a flexible element 14, a chain or the like, the intermediate portion of which passes over a sheave 15 journaled for rotation upon the portion 11 of the casing, a weight 18 being carried by the lower end of the flexible member 14, the weight 18 being arranged to reciprocate, together with the chain whereby it is carried in a tube 17, which may be mounted upon the front wall 16 of the cellar or secured in an upright position in any other approved manner. At this point, it may be stated that in Fig. 1 of the drawings, the grating is shown spaced apart from the coping 2, but it is to be understood that this is not the normal position of the grating, the weight 18 normally holding the grating in contact with the front portion of the casing, the drawing of Fig. 1 being intended more clearly to reveal the structure than would be possible if the grating were shown, in Fig. 1, in the position delineated in Fig. 2.

It is one of the objects of the invention to provide a means whereby the grating may securely be held in open position, and by referring to Fig. 1, it will be seen that a pin 20 is provided, secured by a short chain or the like, to the casing 3, and this pin 20 when the grating is pushed rearwardly, is adapted to be inserted in an opening 22 in the flange 10 of the guide, in front of the grating, to hold the grating in open position, against the effort of the weight 18, the lip 23 being cut away as denoted by the numeral 21, for the reception of the pin 20. It is of course to be understood, that any suitable locking means may be employed for holding the grating in closed position.

I have shown but a single chain and weight for actuating the grating, but it is to be understood that in practice, each of the

front corners of the grating is actuated by a mechanism of the type shown in Fig. 2, a specific delineation of each of said mechanisms being considered unnecessary.

It will be seen that the foregoing device, although simple in construction and of few parts serves as a means whereby, when the doors 19 are thrown open, the opening to the cellar will remain normally closed, the necessity for erecting barriers about the opening being rendered unnecessary, the grating normally moving to closed position under the effort of the weight 18 saving alone the case in which the pin 20 has been mounted in place, with the deliberate intention of holding the grating open.

The device is so constructed that the grating may be slid to an open position, and, when, so disposed, the effective area of the opening will not be materially decreased, the rods 6 being housed within the tubes 4, in an out of the way position, the entire construction of the device being such it cannot readily be broken open with felonious intent without shattering some of the parts or digging the tubes 4 and the casing 3 out of the sidewalk.

Having thus described my invention what I claim as new and desire to protect by Letters Patent is:—

In a device of the class described, a monolithic pavement having an opening; a frame extended around the periphery of the opening; tubes extended outwardly from one end of the frame; a grating movable in the opening and comprising rods slidable in the tubes; a closure hinged to the frame and movable independently of the grating to extend over the opening; yieldable means connected with the grating and independent of the closure, for advancing the grating across the opening into engagement with the other end of the frame; the tubes being embedded in the pavement to reinforce the pavement adjacent the opening and to hold the frame against movement when the last specified end of the frame is engaged by the grating.

In testimony that I claim the foregoing as my own, I have hereto affixed my signature in the presence of two witnesses.

ODIN G. CLAY.

Witnesses:
WALTER BROWNLEY,
W. P. KEELS.

Copies of this patent may be obtained for five cents each, by addressing the "Commissioner of Patents, Washington, D. C."