May 22, 1951 S. GERSTENBLITH 2,554,184

CONNECTOR FOR WATCH STRAPS, BRACELETS OR THE LIKE

Filed Oct. 19, 1946

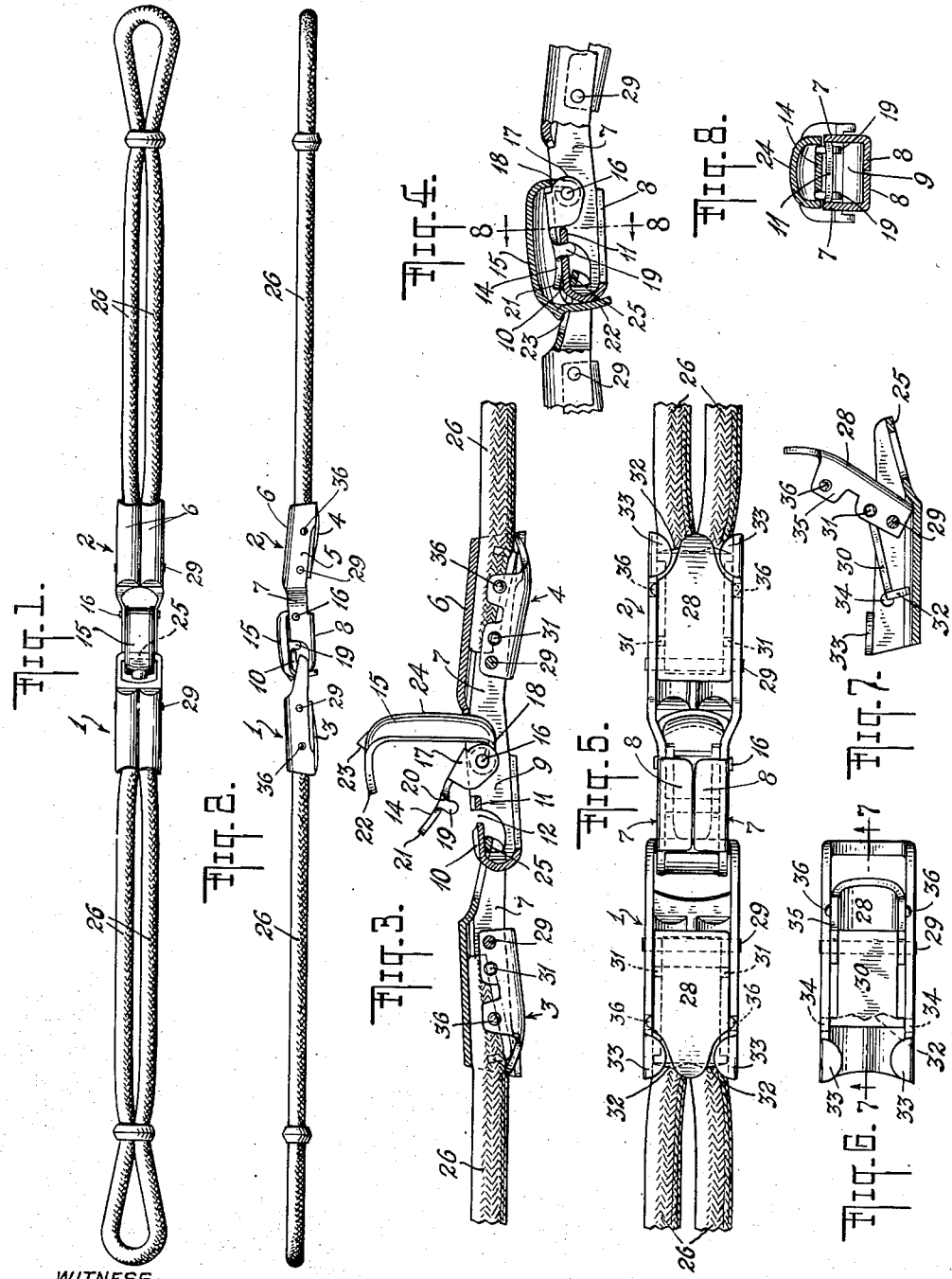

WITNESS
G. V. Rasmussen

INVENTOR.
SIMON GERSTENBLITH
BY
Klein, Alexander & Pohl
ATTORNEYS

Patented May 22, 1951

2,554,184

UNITED STATES PATENT OFFICE

2,554,184

CONNECTOR FOR WATCH STRAPS, BRACELETS, OR THE LIKE

Simon Gerstenblith, Brooklyn, N. Y.

Application October 19, 1946, Serial No. 704,315

1 Claim. (Cl. 24—241)

1

This invention relates to connectors for watch straps, bracelets, chains or other articles of jewelry which are periodically removed but when worn are secured against loss by accidental opening of the connector or the clasp.

The object of the invention is to provide a connector made of as few parts as possible, made out of sheet material primarily by dieing operations and limiting the number of drilling parts to a minimum. The device of the invention is rugged although made of thin sheet material. The latching portions of the connector operate freely, with little resistance, excepting when moving into latching relation, the latching position being obtained by finger pressure exerted downwardly on the parts, which the wearer readily senses or feels and can thereby determine that the parts are in securely latched relation.

The invention is illustrated in connection with cords utilized to secure a watch to the wearer's wrist and the connector is illustrated in association with means for securing the ends of the usual cords to the connector parts.

In the drawings, Fig. 1 is a top view of the connector; Fig. 2 is a side view thereof; Fig. 3 is a longitudinal section with the latch open; Fig. 4 is a similar sectional view with the connector latched; Fig. 5 is a view of the underside of the device of Fig. 1; Fig. 6 is a view of the underside of the connector with the cord attaching device open; Fig. 7 is a sectional view on the line 7—7 of Fig. 6; Fig. 8 is a cross sectional view taken on line 8—8 of Fig. 4.

The connector is made of two parts, the hook carrying member 1 and the latching member 2. The hook carrying member 1 and the latching member 2, are each provided with an integral cord attaching member 3—4. The body 5 of the latching member 2 is stamped from a section of sheet material in the form of a shell having a top wall 6, depending side walls 7 and inwardly bent flanges 8—8 meeting centrally on the underside of the body 5, closing the forward portion of the latching member 2 and providing a housing 9 in which the latching implements are mounted and pivot. A bail 10 is integrally formed with the side walls 7 and the flanges 8—8. A bridge 11 integral with the side walls 7 extends crosswise from said side walls spaced from the free edge of the bail 10 thereby providing a slot 12 communicating with the housing 9. The latch 14 and the covering member 15 are carried on the side walls 7 pivoting on a rivet 16 which passes through the heels 17 and 18 of the latch 14 and the covering member 15. The latch 14 is pro-

2

vided with a pair of integral nibs 19 depending from its top wall. The inside edge of the nibs 19 are spaced from the forward edge of the heel 17 providing a pair of depressions 20. The free end of the latch 14 is provided with an extension 21 for raising the latch by inserting a nail of the wearer therebeneath. The covering member 15 has a nose 22 thereon for maintaining the same in latched position. The bridge 11 is slightly bowed or depressed in its central portion in order that the nibs 19 may be depressed as deeply as possible into the depression 20. The nibs 19 are so positioned with respect to the bridge 11 that when depressed into the slot 12 they will frictionally engage the edges forming the meeting line of the bridge 11 and the side walls 7, where the rigidity of the bridge 11 is greatest. The nibs, when in the slot 12, substantially close it with the extension 21 lying close to the top surface of the bail 10. The covering member 15 is so proportioned in its relation to the forward wall of the bail that its nose 22 will frictionally engage said wall when the covering member is forced downwardly over the latch 14 and is provided with a lip 23 by which it may be swung upwardly. The top wall 24 is slightly curved through substantially its entire length, forming an internal recess in which the top wall of the latch 14 fits. In closing the latch and the covering member it is only necessary that pressure be applied against the top wall of the covering member which on its way downward will pick up the latch and force it into place with the nibs entering within the housing and forcibly engaging on the bridge 11. The user will readily detect when the latch and the covering member are in their respective engaging positions by the feel of the snap of these parts. If the user depresses the latch and the covering member independently, he will sense by feel the same snap action when the parts are "home." These parts are necessarily small and a visual examination to see if they are locked is not practical and consequently the invention affords not only a secure locking means but also a means whereby the user by his sense of feel knows that the parts are locked.

The hook carrying member 1 is provided with a hook 25 which is so proportioned that it will pass through the slot 12 and find a position in the housing 9 beneath the bail 10, being confined at such position by the latch 14 and by the fact that the nibs 19 close the slot 12. When the parts are to be disconnected, the members 14 and 15 are lifted and the hook 25 must then be tilted upwardly in order to pass the bar of the hook

through the slot 12. This is the only practical way of separating the parts. It is quite impossible to manipulate the parts in the same manner by accident and therefore, during wearing of the device, the user is assured that the connector parts will not separate.

The invention is illustrated in connection with a type of wrist band which includes flexible extension in the form of cords 26—26. The cords are removably secured, one to the hook carrying member 1 and the other to the latching member 2 by two like attaching members, it being necessary to describe but one of them. An attaching member consists of a finger piece 28 movably mounted on the pin 29 carried by the side wall 7. The finger piece 28 has mounted in its own walls a claw member 30 by the two lugs 31 integrally formed at the base of the claw member and pivoted in holes in the side wall of the finger piece 28. The claw member is provided forwardly with a plurality of teeth 32. The claw member 30, inasmuch as it is pivoted to the finger piece 28 above the pin 29 (see Fig. 7), will have a sliding motion when it is moved forwardly and backwardly by manipulation of the finger piece 28. The side walls 5 are provided with flanges 33 and the said walls are also provided with holes 34. The finger piece is provided with ears 35 from which are stamped two outwardly extending nipples 36 adapted to fit in the holes 34. The ends of the cords fit between the side walls and are fed forwardly until the forward edges thereof contact the pin 29. With the finger piece 28 in raised position the claw member is forcibly depressed to that the teeth 32 bite into the cords and the top surface of the claw member does not extend above the flanges 33. With continued pressure applied to the claw member the finger piece 28 is moved downwardly which causes the top wall of the claw member 30 to pass beneath the flanges 33 thereby securing the claw member in biting engagement with the cords. The continued movement of the finger piece causes the nipples 36 to snap over the top edges of the side wall and enter the holes 34 thereby locking the claw member and the finger piece. The finger piece may be raised to renew the cord or to shorten it by lifting the finger piece and freeing the cord from the claw member.

The finger piece snaps over the edge of the side walls with a definite action which the wearer can readily feel and thereby is assured that the finger piece is "home."

The nibs 19 are positioned angularly to the bridge 11 and consequently the side edges of the nibs engage the front edge of the bridge. The nibs, by such relation, give to a very slight extent but sufficient to snap over the bridge and hold frictionally there against.

I claim:

A latching member having upstanding side walls, a bail at the free end of said latching member, said bail being adapted to receive a hook, a latch and a covering member pivotally mounted on a common support, a bridge spanning the side walls of said latching member at the top edges thereof and positioned between said bail and said common support, a slot leading from said bridge to the under side of said bail, said latch and said cover member, when in open position, facing said bail, nibs on said latch, a nose at the end of said covering member, said nibs, when the latch is depressed, engaging an edge of said bridge, the nose of said cover piece, when the covering member is depressed, frictionally engaging the forward edge of the bail.

SIMON GERSTENBLITH.

REFERENCES CITED

The following references are of record in the file of this patent:

UNITED STATES PATENTS

Number	Name	Date
1,220,002	Rice	Mar. 20, 1917
1,597,417	Rioux	Aug. 24, 1926
1,605,868	Suttin	Nov. 2, 1926
1,892,350	Kestenman	Dec. 27, 1932
2,115,954	Johnson	May 3, 1938
2,148,534	Cohan	Feb. 28, 1939
2,180,534	Levesque	Nov. 21, 1939
2,186,438	Weiner	Jan. 9, 1940
2,211,018	Levine	Aug. 13, 1940
2,215,526	Kestenman	Sept. 24, 1940

FOREIGN PATENTS

Number	Country	Date
552,395	France	Apr. 30, 1923
698,192	France	Jan. 28, 1931
829,311	France	June 20, 1938