(12) INTERNATIONAL APPLICATION PUBLISHED UNDER THE PATENT COOPERATION TREATY (PCT)

(19) World Intellectual Property Organization
International Bureau

(43) International Publication Date
28 November 2019 (28.11.2019)

WIPO | PCT

(10) International Publication Number
WO 2019/226247 A1

(51) International Patent Classification:
E21B 47/14 (2006.01) *H04B 11/00* (2006.01)

(21) International Application Number:
PCT/US2019/026869

(22) International Filing Date:
11 April 2019 (11.04.2019)

(25) Filing Language: English

(26) Publication Language: English

(30) Priority Data:
15/986,348 22 May 2018 (22.05.2018) US

(71) Applicant: **BAKER HUGHES, A GE COMPANY, LLC** [US/US]; 17021 Aldine Westfield, Houston, Texas 77073 (US).

(72) Inventors: **BRITT, John Ellis**; 17021 Aldine Westfield, Houston, TX 77073 (US). **BALE, Derek Shelby**; 17021 Aldine Westfield, Houston, TX 77073 (US). **FREEMAN, James Joseph**; 17021 Aldine Westfield, Houston, TX 77073 (US).

(74) Agent: **HUNZIKER, Robin** et al.; Baker Hughes, a GE company, LLC, 14990 Yorktown Plaza Drive, Houston, Texas 77040 (US).

(81) Designated States *(unless otherwise indicated, for every kind of national protection available)*: AE, AG, AL, AM, AO, AT, AU, AZ, BA, BB, BG, BH, BN, BR, BW, BY, BZ, CA, CH, CL, CN, CO, CR, CU, CZ, DE, DJ, DK, DM, DO, DZ, EC, EE, EG, ES, FI, GB, GD, GE, GH, GM, GT, HN, HR, HU, ID, IL, IN, IR, IS, JO, JP, KE, KG, KH, KN, KP, KR, KW, KZ, LA, LC, LK, LR, LS, LU, LY, MA, MD, ME, MG, MK, MN, MW, MX, MY, MZ, NA, NG, NI, NO, NZ, OM, PA, PE, PG, PH, PL, PT, QA, RO, RS, RU, RW, SA, SC, SD, SE, SG, SK, SL, SM, ST, SV, SY, TH, TJ, TM, TN, TR, TT, TZ, UA, UG, US, UZ, VC, VN, ZA, ZM, ZW.

(84) Designated States *(unless otherwise indicated, for every kind of regional protection available)*: ARIPO (BW, GH, GM, KE, LR, LS, MW, MZ, NA, RW, SD, SL, ST, SZ, TZ, UG, ZM, ZW), Eurasian (AM, AZ, BY, KG, KZ, RU, TJ, TM), European (AL, AT, BE, BG, CH, CY, CZ, DE, DK, EE, ES, FI, FR, GB, GR, HR, HU, IE, IS, IT, LT, LU, LV, MC, MK, MT, NL, NO, PL, PT, RO, RS, SE, SI, SK, SM, TR), OAPI (BF, BJ, CF, CG, CI, CM, GA, GN, GQ, GW, KM, ML, MR, NE, SN, TD, TG).

(54) Title: SIGNAL TRANSMISSION SYSTEM AND METHOD

(57) Abstract: A signal transmission system including a first transducer mounted to a surface of a member, a second transducer movable into contact with a second surface of the member, a material disposed between the second transducer and the second surface of the member. A method for communicating acoustic energy through a member including pressing a second transducer to a second surface of the member, the member having a first transducer mounted to an opposite surface thereof, sandwiching a material between the second transducer and the second surface of the member, and transmitting a signal between the first transducer and the second transducer.

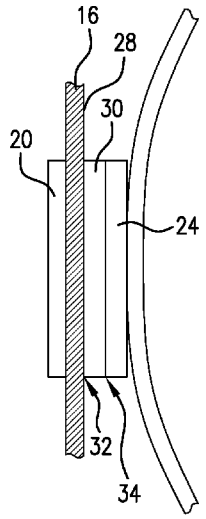

FIG.2

WO 2019/226247 A1

[Continued on next page]

Declarations under Rule 4.17:

— *as to applicant's entitlement to apply for and be granted a patent (Rule 4.17(ii))*

— *as to the applicant's entitlement to claim the priority of the earlier application (Rule 4.17(iii))*

Published:

— *with international search report (Art. 21(3))*

SIGNAL TRANSMISSION SYSTEM AND METHOD

CROSS REFERENCE TO RELATED APPLICATIONS

[0001] This application claims the benefit of U.S. Application No. 15/986348, filed on May 22, 2018, which is incorporated herein by reference in its entirety.

BACKGROUND

[0002] Signal transmission (including energy signals) by acoustic transducers through another material is accomplished by seating one transducer on one side of the material and a second transducer on the opposite side of the same material. Energy is passed through the material and hence communication is established. In some environments attenuation of the signal may be more problematic than others. Lower density materials such as gasses are generally more problematic for acoustic coupling. Hence the use of acoustic transducer systems for communication in such conditions is less favored. Reliable communication using this method would be helpful to industries and particularly the resource recovery industry, for example in boreholes.

SUMMARY

[0003] A signal transmission system including a first transducer mounted to a surface of a member, a second transducer movable into contact with a second surface of the member, a material disposed between the second transducer and the second surface of the member.

[0004] A method for communicating acoustic energy through a member including pressing a second transducer to a second surface of the member, the member having a first transducer mounted to an opposite surface thereof, sandwiching a material between the second transducer and the second surface of the member, and transmitting a signal between the first transducer and the second transducer.

BRIEF DESCRIPTION OF THE DRAWINGS

[0005] The following descriptions should not be considered limiting in any way. With reference to the accompanying drawings, like elements are numbered alike:

[0006] Figure 1 is a schematic representation of an acoustic transducer energy transmission configuration in a borehole; and

[0007] Figure 2 is an enlarged section of Figure 1showning interfaces.

DETAILED DESCRIPTION

[0008] A detailed description of one or more embodiments of the disclosed apparatus and method are presented herein by way of exemplification and not limitation with reference to the Figures.

[0009] Referring to Figure 1, a signal transmission system 10 for acoustic communication through another material is illustrated in a borehole 12 in a formation 14. A member 16 illustrated as a casing string is disposed in the borehole 12. On an outside surface 18 of the casing string 16, there is disposed a transducer 20. Subsequently to installation of the casing 16 in the hole 12 a tubing string 22 is run in the hole 12, the tubing string having a second transducer 24 associated therewith. The transducer 24 is mounted upon a mechanism 26 capable of moving the transducer radially outwardly into contact with an inner surface 28 of the casing 16. Such mechanisms 26 include centralizers, arms, swellables, inflatables, compressibles, etc. Operation of such mechanisms is well known to the art and they require no particular discussion here. Illustrated is a centralizer. The transducers 20 and 24 when aligned and disposed at opposite surfaces of the casing communicate with each other through acoustic energy.

[0010] A material 30 is disposed between the transducer 24 and the surface 28. Material 30 is acoustically transmissive and physically compliant to ensure that fluids and especially gasses cannot migrate to a location between the transducer 24 and the surface 28. Specifically, the compliance of the material ensures a full contact with the uneven surface 28 of the casing 16, leaving no gaps and the acoustic transmissivity ensures successful communications between transducer 24 and transducer 20. This is because the introduction of such contaminates attenuates the acoustic signal that is to be coupled to the casing 16 and thereby communicated to the transducer 20. If the signal attenuates significantly, then the process of communication or power transmission is defeated. This is clearly undesirable.

[0011] The material may be a coating on the surface 28 (up to the entire surface 28 may be coated), a coating on the transducer 24, an independent pad of material, etc. In the event a coating of the transducer 24 is employed, the coating may be only on a portion of the transducer that is to be in contact with the surface 28 or may be a coating that ranges from that portion to the entire transducer 24. The important point is that the portion of the transducer 24 that is to be in acoustic contact with the surface must not suffer the indignity of acoustically damping contaminates within the acoustic path between the transducer 24 and

the surface 28. Because gas is a significant attenuator and a common occurrence in a wellbore, gas is particularly targeted to be excluded from the interface between the transducer 24 and the surface 28 or casing 16.

[0012] It is to be understood that in various embodiments there may be one or two interfaces that must exclude contaminants. These are 32 and 34. Where the material 30 is bonded to the member 16 or the transducer 24, such as in the form of a coating, then there is only one interface from which gas and contaminates must be excluded. Specifically if the material 30 is bonded to the member 16, the interface will be single and at 34 (Figure 2). If the material 30 is bonded to transducer 24, the interface will be single and at 32 (Figure 2). Alternatively, if the material 30 is a separate component, there will be two interfaces 32 and 34 from which contaminates must be excluded. Malleability of the material is important for all embodiments to ensure that the contact at these interfaces is a conforming contact. i.e. one that will deform into irregularities in the surfaces to ensure a contaminate free and acoustically couple contact.

[0013] Materials contemplated include rubbers, soft metals and plastics. For example only, rubbers considered desirable include: fluoroelastormers, perfluoroelastomers, etc., with 70 durometer being an iteration; soft metals include lead, tin, etc.; plastics include phenolics, etc. In each case, the material 30 is selected to conform to the surface irregularities of the surface 28 of casing 16 and a surface 32 of transducer 24 thereby excluding contaminates and acoustically coupling the transducer 24 to the casing 16.

[0014] A method for communicating acoustic energy through a member such as a casing 16 is also contemplated. The method includes pressing the second transducer 24 to the second surface 28 of the member 16. The pressing is done by any of the mechanisms noted above. Pressing results in a strong sandwiching of the material 30 between second transducer 24 and surface 28. By strong sandwiching, it is meant that some deformation of the material 30 is achieved at the same time. This ensures the material 30 conforms to any surface irregularities of the surface 28 and the transducer 24, thereby ensuring no contaminates including gas may enter and become trapped between the transducer 24 and the surface 28. Having accomplished the foregoing, the method further includes transmitting a signal between the first transducer and the second transducer in either direction.

[0015] Set forth below are some embodiments of the foregoing disclosure:

[0016] Embodiment 1: A signal transmission system including a first transducer mounted to a surface of a member, a second transducer movable into contact with a second

surface of the member, a material disposed between the second transducer and the second surface of the member.

[0017] Embodiment 2: The system as in any prior embodiment, wherein the material is disposed on the second transducer.

[0018] Embodiment 3: The system as in any prior embodiment, wherein the material is a coating on the second transducer.

[0019] Embodiment 4: The system as in any prior embodiment, wherein the material is a pad on the second transducer.

[0020] Embodiment 5: The system as in any prior embodiment, wherein the material is a complete coating of the second transducer.

[0021] Embodiment 6: The system as in any prior embodiment, wherein the material is on the member.

[0022] Embodiment 7: The system as in any prior embodiment, wherein the material is a coating on the member.

[0023] Embodiment 8: The system as in any prior embodiment, wherein the material excludes contaminates from between the second transducer and the second surface of the member.

[0024] Embodiment 9: The system as in any prior embodiment, wherein the material is rubber.

[0025] Embodiment 10: The system as in any prior embodiment, wherein the material is soft metal.

[0026] Embodiment 11: The system as in any prior embodiment, wherein the material is plastic.

[0027] Embodiment 12: A method for communicating acoustic energy through a member including pressing a second transducer to a second surface of the member, the member having a first transducer mounted to an opposite surface thereof, sandwiching a material between the second transducer and the second surface of the member, and transmitting a signal between the first transducer and the second transducer.

[0028] Embodiment 13: The method as in any prior embodiment, wherein the sandwiching includes excluding contaminates between the second transducer and the second surface of the member.

[0029] Embodiment 14: The method as in any prior embodiment, wherein the excluding includes excluding gas.

[0030] Embodiment 15: The method as in any prior embodiment, wherein the sandwiching includes deforming the material.

[0031] The use of the terms "a" and "an" and "the" and similar referents in the context of describing the invention (especially in the context of the following claims) are to be construed to cover both the singular and the plural, unless otherwise indicated herein or clearly contradicted by context. Further, it should be noted that the terms "first," "second," and the like herein do not denote any order, quantity, or importance, but rather are used to distinguish one element from another. The modifier "about" used in connection with a quantity is inclusive of the stated value and has the meaning dictated by the context (e.g., it includes the degree of error associated with measurement of the particular quantity).

[0032] The teachings of the present disclosure may be used in a variety of well operations. These operations may involve using one or more treatment agents to treat a formation, the fluids resident in a formation, a wellbore, and / or equipment in the wellbore, such as production tubing. The treatment agents may be in the form of liquids, gases, solids, semi-solids, and mixtures thereof. Illustrative treatment agents include, but are not limited to, fracturing fluids, acids, steam, water, brine, anti-corrosion agents, cement, permeability modifiers, drilling muds, emulsifiers, demulsifiers, tracers, flow improvers etc. Illustrative well operations include, but are not limited to, hydraulic fracturing, stimulation, tracer injection, cleaning, acidizing, steam injection, water flooding, cementing, etc.

[0033] While the invention has been described with reference to an exemplary embodiment or embodiments, it will be understood by those skilled in the art that various changes may be made and equivalents may be substituted for elements thereof without departing from the scope of the invention. In addition, many modifications may be made to adapt a particular situation or material to the teachings of the invention without departing from the essential scope thereof. Therefore, it is intended that the invention not be limited to the particular embodiment disclosed as the best mode contemplated for carrying out this invention, but that the invention will include all embodiments falling within the scope of the claims. Also, in the drawings and the description, there have been disclosed exemplary embodiments of the invention and, although specific terms may have been employed, they are unless otherwise stated used in a generic and descriptive sense only and not for purposes of limitation, the scope of the invention therefore not being so limited.

CLAIMS

What is claimed is:

1. A signal transmission system (10) comprising:

a first transducer (20) mounted to a surface (18) of a member (16);

a second transducer (24) movable into contact with a second surface (28) of the member (16);

a material (30) disposed between the second transducer (24) and the second surface (28) of the member (16).

2. The system (10) as claimed in claim 1 wherein the material (30) is disposed on the second transducer (24).

3. The system (10) as claimed in claim 1 wherein the material (30) is a coating on the second transducer (24).

4. The system (10) as claimed in claim 1 wherein the material (30) is a pad on the second transducer (24).

5. The system (10) as claimed in claim 1 wherein the material (30) is a complete coating of the second transducer (24).

6. The system (10) as claimed in claim 1 wherein the material (30) is on the member (16).

7. The system (10) as claimed in claim 1 wherein the material (30) is a coating on the member (16).

8. The system (10) as claimed in claim 1 wherein the material (30) excludes contaminates from between the second transducer (24) and the second surface (28) of the member (16).

9. The system (10) as claimed in claim 1 wherein the material (30) is rubber.

10. The system (10) as claimed in claim 1 wherein the material (30) is soft metal.

11. The system (10) as claimed in claim 1 wherein the material (30) is plastic.

12. A method for communicating acoustic energy through a member (16) comprising:

pressing a second transducer (24) to a second surface (28) of the member (16), the member (16) having a first transducer (20) mounted to an opposite surface thereof;

sandwiching a material (30) between the second transducer (24) and the second surface (28) of the member (16); and

transmitting a signal between the first transducer (20) and the second transducer (24).

13. The method as claimed in claim 12 wherein the sandwiching includes excluding contaminates between the second transducer (24) and the second surface (28) of the member (16).

14. The method as claimed in claim 13 wherein the excluding includes excluding gas.

15. The method as claimed in claim 12 wherein the sandwiching includes deforming the material (30).

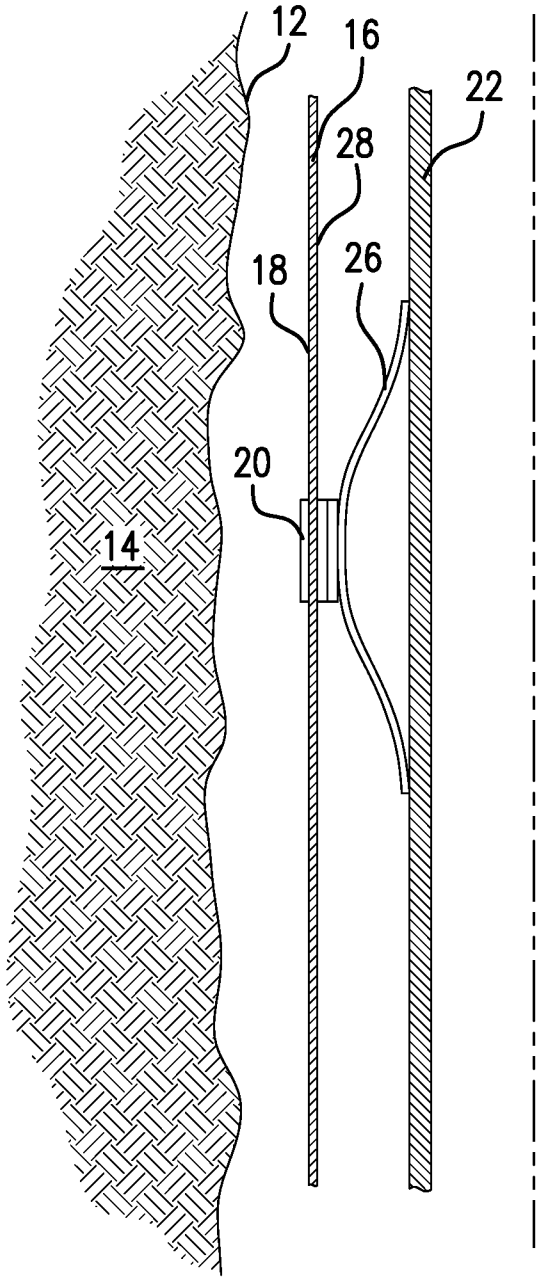

FIG.1

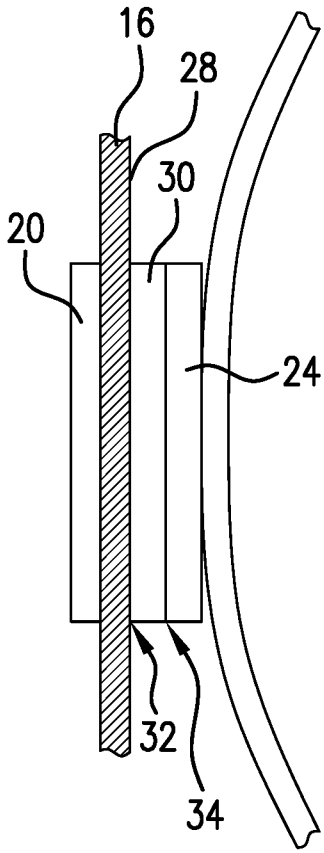

FIG.2

INTERNATIONAL SEARCH REPORT

International application No.
PCT/US2019/026869

A. CLASSIFICATION OF SUBJECT MATTER

E21B 47/14(2006.01)i, H04B 11/00(2006.01)i

According to International Patent Classification (IPC) or to both national classification and IPC

B. FIELDS SEARCHED

Minimum documentation searched (classification system followed by classification symbols)
E21B 47/14; B23P 17/04; E21B 23/00; E21B 47/00; G01N 29/24; G01N 29/28; G01V 1/40; H04B 11/00

Documentation searched other than minimum documentation to the extent that such documents are included in the fields searched
Korean utility models and applications for utility models
Japanese utility models and applications for utility models

Electronic data base consulted during the international search (name of data base and, where practicable, search terms used)
eKOMPASS(KIPO internal) & Keywords: signal transmission, transducer, material, coating, layer, pad, rubber, soft metal, plastic

C. DOCUMENTS CONSIDERED TO BE RELEVANT

Category*	Citation of document, with indication, where appropriate, of the relevant passages	Relevant to claim No.
Y	US 2008-0106972 A1 (LIANG et al.) 08 May 2008 See paragraphs [0019]-[0022] and figures 1-3.	1-15
Y	EP 0635719 A2 (GENERAL ELECTRIC COMPANY) 25 January 1995 See column 5, lines 44-46, column 6, lines 20-30 and figure 2.	1-15
A	US 2005-0205268 A1 (ENGELS et al.) 22 September 2005 See paragraphs [0040]-[0045] and figures 6A-6C.	1-15
A	US 2013-0000399 A1 (LILLY et al.) 03 January 2013 See paragraphs [0029]-[0036] and figures 1-3.	1-15
A	US 2005-0152219 A1 (GARCIA-OSUNA et al.) 14 July 2005 See paragraph [0054] and figure 13.	1-15

☐ Further documents are listed in the continuation of Box C.

☒ See patent family annex.

* Special categories of cited documents:
"A" document defining the general state of the art which is not considered to be of particular relevance
"E" earlier application or patent but published on or after the international filing date
"L" document which may throw doubts on priority claim(s) or which is cited to establish the publication date of another citation or other special reason (as specified)
"O" document referring to an oral disclosure, use, exhibition or other means
"P" document published prior to the international filing date but later than the priority date claimed
"T" later document published after the international filing date or priority date and not in conflict with the application but cited to understand the principle or theory underlying the invention
"X" document of particular relevance; the claimed invention cannot be considered novel or cannot be considered to involve an inventive step when the document is taken alone
"Y" document of particular relevance; the claimed invention cannot be considered to involve an inventive step when the document is combined with one or more other such documents,such combination being obvious to a person skilled in the art
"&" document member of the same patent family

Date of the actual completion of the international search	Date of mailing of the international search report
30 July 2019 (30.07.2019)	**30 July 2019 (30.07.2019)**

Name and mailing address of the ISA/KR
International Application Division
Korean Intellectual Property Office
189 Cheongsa-ro, Seo-gu, Daejeon, 35208, Republic of Korea
Facsimile No. +82-42-481-8578

Authorized officer
LEE, Jong Kyung
Telephone No. +82-42-481-3360

INTERNATIONAL SEARCH REPORT

Information on patent family members

International application No.

PCT/US2019/026869

Patent document cited in search report	Publication date	Patent family member(s)	Publication date
US 2008-0106972 A1	08/05/2008	GB 2456704 A	29/07/2009
		GB 2456704 B	16/11/2011
		US 7602668 B2	13/10/2009
		WO 2008-058076 A1	15/05/2008
EP 0635719 A2	25/01/1995	EP 0635719 A3	13/12/1995
		JP 07-167845 A	04/07/1995
		TW 317513 B	11/10/1997
		US 5426980 A	27/06/1995
US 2005-0205268 A1	22/09/2005	AR 049789 A1	06/09/2006
		BR PI0600554 A	24/10/2006
		CA 2536446 A1	02/09/2006
		CN 1828013 A	06/09/2006
		EA 010880 B1	30/12/2008
		EA 200600339 A1	27/10/2006
		EP 1698912 A2	06/09/2006
		EP 1698912 A3	03/07/2013
		EP 1698912 B1	06/07/2016
		JP 2006-242955 A	14/09/2006
		SA 1942 B1	27/01/2008
		US 2005-0205248 A1	22/09/2005
		US 2006-0198243 A1	07/09/2006
		US 2007-0211572 A1	13/09/2007
		US 7150317 B2	19/12/2006
		US 7311143 B2	25/12/2007
		US 7663969 B2	16/02/2010
		US 7697375 B2	13/04/2010
		WO 2005-089458 A2	29/09/2005
		WO 2005-089458 A3	08/06/2006
		WO 2008-141331 A1	20/11/2008
		WO 2008-141331 A9	05/02/2009
US 2013-0000399 A1	03/01/2013	BR 112013033820 A2	14/02/2017
		GB 2509405 A	02/07/2014
		GB 2509405 B	13/03/2019
		NO 20131681 A1	28/01/2014
		US 8783099 B2	22/07/2014
		WO 2013-006421 A2	10/01/2013
		WO 2013-006421 A3	21/02/2013
US 2005-0152219 A1	14/07/2005	CA 2491545 A1	08/07/2005
		CA 2491545 C	09/09/2008
		CA 2491546 A1	08/07/2005
		CA 2491546 C	13/10/2009
		CA 2491558 A1	08/07/2005
		CA 2491558 C	24/11/2009
		CN 100422765 C	01/10/2008
		CN 101349152 A	21/01/2009

INTERNATIONAL SEARCH REPORT

Information on patent family members

International application No.

PCT/US2019/026869

Patent document cited in search report	Publication date	Patent family member(s)	Publication date
		CN 101349152 B	15/08/2012
		CN 1648690 A	03/08/2005
		DE 102004063219 A1	04/08/2005
		FR 2866775 A1	26/08/2005
		FR 2866775 B1	25/09/2009
		FR 2866776 A1	26/08/2005
		FR 2866776 B1	13/06/2008
		GB 2409869 A	13/07/2005
		GB 2409869 B	22/03/2006
		GB 2410088 A	20/07/2005
		GB 2410088 B	27/09/2006
		GB 2410331 A	27/07/2005
		GB 2410331 B	11/10/2006
		GB 2430259 A	21/03/2007
		GB 2430259 B	25/07/2007
		JP 2005-210738 A	04/08/2005
		JP 2005-223925 A	18/08/2005
		JP 2012-016059 A	19/01/2012
		JP 4771708 B2	14/09/2011
		JP 4879494 B2	22/02/2012
		MX PA05000316 A	05/12/2005
		MX PA05000317 A	19/08/2005
		MX PA05000318 A	05/12/2005
		NO 20045646 L	11/07/2005
		NO 20045647 L	11/07/2005
		NO 20045648 L	11/07/2005
		NO 337854 B1	04/07/2016
		NO 338174 B1	01/08/2016
		NO 340697 B1	06/06/2017
		RU 2004138758 A	20/06/2006
		RU 2004138759 A	20/06/2006
		RU 2362874 C2	27/07/2009
		RU 2365752 C2	27/08/2009
		US 2005-0150655 A1	14/07/2005
		US 2005-0150713 A1	14/07/2005
		US 7364007 B2	29/04/2008
		US 7367392 B2	06/05/2008
		US 7460435 B2	02/12/2008