July 31, 1956 R. B. HARLAN 2,757,317

RADIATION RESPONSIVE CONTROL UNITS

Filed Feb. 6, 1951

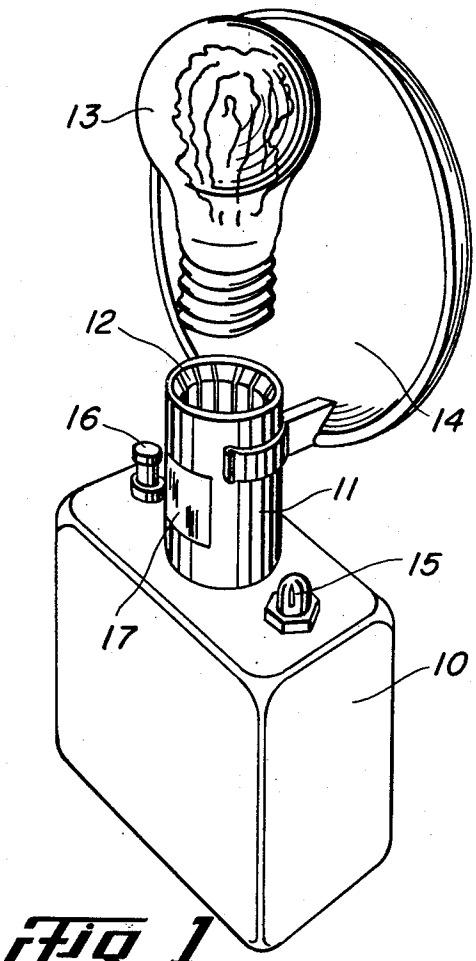

Fig. 1

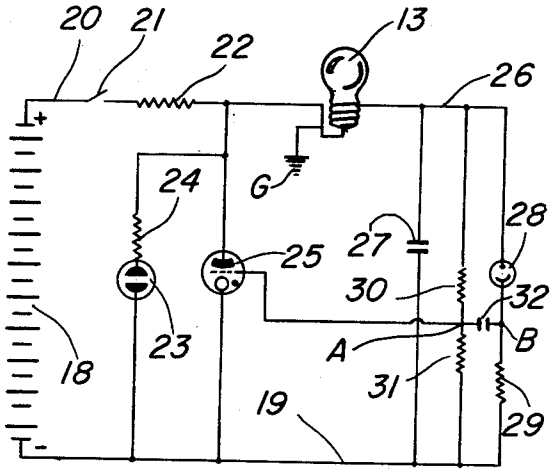

Fig. 2

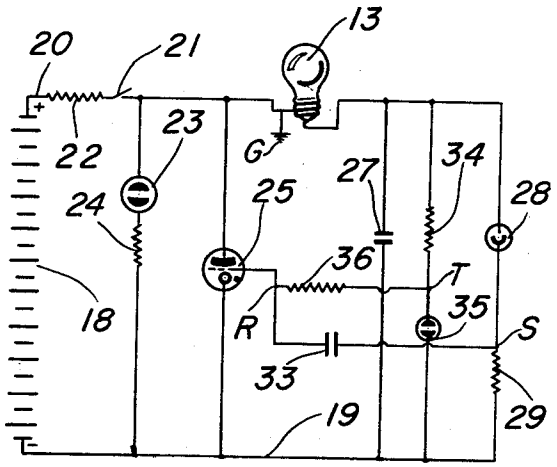

Fig. 3

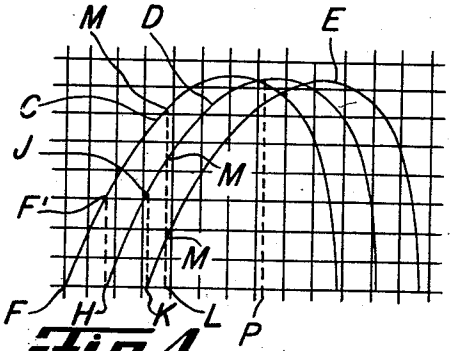

Fig. 4

Inventor

Roger B. Harlan

By Ackley & Ackley

ATTORNEYS

United States Patent Office 2,757,317
Patented July 31, 1956

2,757,317

RADIATION RESPONSIVE CONTROL UNITS

Roger Bedford Harlan, Dallas, Tex., assignor of one-half to R. K. Harlan, Dallas, Tex.

Application February 6, 1951, Serial No. 209,697

7 Claims. (Cl. 315—156)

This invention relates to new and useful improvements in radiation responsive control units.

The invention concerns such control units adapted to supply electrical impulses to electrical and electro-mechanical devices.

The invention is particularly concerned with wire-free control units of the type known as "light slave units" which are entirely free of any wires between the actuating or "master" force, and the operating, or "slave", unit and function to operate various devices upon reception of incident light or radiation.

One application of this invention concerns wire-free slave units known as "slave flash units" which are entirely free of any connecting wires between the unit and the "master" actuating light and function to operate a photographer's flash bulb or electrical or electro-mechanical devices upon reception of incident light of sufficient intensity within a sufficiently brief interval of time.

Units of the light-responsive slave type have been developed heretofore, but a number of objections have been raised as to the complete operability of such units. Certain types of slave units employ mechanical relays which inherently operate with a considerable time lag and adversely affect the synchronization of the slave unit with the master unit. Other types of slave units have possessed poor accommodation to incident light and tend to fire the flash bulb, or to operate other electrical devices, at any time at which light of sufficient intensity falls upon the unit. The result of this objectionable feature has been that the units will function prematurely in sunlight or in the beam of an automobile headlight, and hence have proved unsatisfactory in many instances.

A principal object of the present invention is to provide an improved radiation responsive slave unit having superior accommodation to incident light whereby the unit adjusts itself rapidly to incident light and will not operate or function except in the presence of a marked and rapid increase in incident light of the value approaching an almost instantaneous increase of considerable magnitude in the light falling upon the unit.

Yet another object of the invention is to provide an improved slave unit which is entirely electronic in structure and operation and is free of all mechanical or moving parts.

A still further object of the invention is to provide an improved slave unit employing small batteries as a power supply and having a very short warm-up period and rapid recovery between firing operations, the unit being adapted to fire flash bulbs or high speed electronic flash units of any size, or a series of said bulbs or units, or actuate other equipment, and yet being completely portable and extremely durable in structure.

A further object of the invention is to provide an improved unit of the character described having provision for avoiding the accidental firing of flash bulbs or operation of other units, which may be employed for testing such bulbs or units, which provides for a minimum drain upon the battery power supply thus enhancing the operating life of the batteries and yet permitting the unit to be left in an operable condition for periods of several hours, the unit continually adapting itself to the intensity of the ambient or incident light whereby the sensitivity of the unit is maintained at a maximum, sufficient even to actuate the unit by reflected rather than direct light, and yet which is instantaneously responsive to an increase in light sufficiently sudden and of sufficient magnitude to provide the desired operation.

Yet another object of the invention is to provide an improved unit of the character described which automatically resets itself between firing operations, which is not adversely affected by temperature, in which the component parts have long operating lives, and which is free of controls with the exception of a simple on-and-off switch, whereby the durability of the device is greatly enhanced and it is not readily subject to mechanical failure, or to excessive wear, or to short operating life of the various component parts.

A pertinent object of the invention is to provide a unit of the character described which is extremely fast and sensitive in operation so that the slave flash bulb or other electrical device is fired or actuated substantially instantaneously with the firing of a master flash bulb or electronic flash unit, or the operation of other light sources, whereby the flash bulbs or other electrical devices reach maximum operation at approximately the same time.

A construction designed to carry out the invention will be hereinafter described together with other features of the invention.

The invention will be more readily understood from a reading of the following specification and by reference to the accompanying drawing wherein examples of the invention are shown, and wherein:

Fig. 1 is a perspective view of a slave flash unit constructed in accordance with this invention,

Fig. 2 is a schematic view illustrating the wiring diagram for the flash unit,

Fig. 3 is a view similar to Fig. 2 illustrating an alternative wiring diagram, and

Fig. 4 is a diagrammatic view illustrating the consecutive firing of a series of slave flash units in response to the operation of a master flash unit.

Heretofore, a number of slave units have been developed for the purpose of operating or causing to function an electrical device, such as igniting a photographer's flash bulb or an electronic flash unit at a distance from a camera and a master flash bulb or electronic flash unit, all of these units operating upon the principle of employing a photo-electric cell to intercept light from the master unit and employing such cell to initiate the firing of the slave unit. Some units have employed a small radio transmitter in place of transmitted light, but all of the known units have been subject to a number of objections. The main shortcoming to the previous units is that they could not adapt themselves to changing light conditions. Some of the units were so designed as to fire at a pre-determined light level or light intensity with the result that such units invariably fired when exposed to sunlight, or when struck at night by the beam of light from an automobile headlight. Some of the units were provided with manual sensitivity controls with which the sensitivity of the unit could be adjusted. This manual sensitivity adjustment, however, merely shifts the sensitivity of the unit from one point to another and does not affect or eliminate the tendency of the unit to fire upon a relatively slow increase of light as would be encountered, for instance, in taking the unit from a daylighted room out into the open sunlight. Further, under changing light conditions, the manual sensitivity control must be adjusted continuously in order to maintain the unit with proper operating sensitivity.

A number of the units employed mechanical contrivances such as relays, solenoids and various other devices that must move or be moved during the firing or actuating process. Such mechanical movements introduce time delays or time lags and prevent the units from functioning sufficiently rapidly as to cause the slave flash bulb to fire in time to produce something near its maximum light output closely adjacent the time of such maximum light output of the master flash bulb or unit. A number of the prior units used large, bulky batteries which had short operating lives; a number of the units were bulky and awkward to handle; and some used filament type tubes which require a considerable warm-up time, which produce a relatively heavy load upon the battery power supply, and which are more subject to failure than a cold cathode type of tube.

The present invention overcomes all of these difficulties by being small and compact in structure, by using small batteries having long operating lives because of the small load applied thereto, by having automatic sensitivity control so as to maintain the unit at the highest permissible sensitivity and yet to prevent firing of the unit by any light increase other than an extremely rapid increase of large magnitude, by the absence of all moving parts, and by very rapid operation.

An example of a structure for carrying out the teaching of this invention is shown in the drawings in which the numeral **10** designates a rectangular case or housing for containing the battery power supply and the various electronic elements of the structure with the exception of the photo-electric cell. An upright tubular bulb socket **11** projects upwardly from the top surface of the housing **10**, the socket itself housing a photo-electric cell and having a recess **12** for receiving the base of an ordinary photographer's flash bulb **13**. A suitable reflector **14** is provided for the flash bulb. Also present upon the upper surface of the housing **10** is the upper portion of a neon tube **15** and an on-off switch **16**.

The bulb holder **11** is rotatable upon the housing **10** and carries a transparent or translucent window **17** in one sidewall, the window **17** being adapted to transmit light, visible or invisible, to a photo-electric cell, as will appear more fully hereinafter.

It is to be noted that the invention is concerned primarily with the wiring diagrams given and with the electronic portions of the device, and that the specific structure illustrated in Fig. 1 is illustrative only as a means of carrying out the invention. The invention is not limited to the arrangement shown in Fig. 1 although this structure has been found eminently suitable. Further, the invention is not limited to use with photographer's flash bulbs or electronic flash units since it may well be adapted to other uses in which a momentary electrical current or pulse is used to trigger additional operations.

A suitable wiring diagram is shown in Fig. 2 of the drawings, the wiring arrangement including a battery power supply **18** having its negative terminal connected to a negative bus or conductor **19**. Although subject to variation, a dry battery of approximately 135 volts is employed, the battery power supply being constituted, as an example, by two Eveready No. 467 batteries or equivalent batteries. Throughout the description of the structure, usable or preferred sizes and ratings of the electrical devices will be given, but it is to be noted that such descriptive or explanatory matter is not to be considered as limiting upon the invention except where such is expressly stated. The power supply may be of any suitable type, direct current, or alternating current with a suitable rectifier and with or without a transformer.

A conductor **20** leads from the positive pole of the battery **18** through an on and off switch **21** and a resistor **22** to a ground or frame connection G. The resistor **22** may desirably be of the order of 5600 ohms. A neon

lamp **23**, for example an NE51 tube, is connected between the negative conductor **19** and the conductor **20** between the resistor **22** and the frame connection G. A resistor **24** is placed in series with the lamp **23**, such resistor suitably being of the magnitude of 56000 ohms. A glow discharge tube **25** is also connected between the positive and negative conductors, the cathode of the tube being connected to the negative bus **19** and the plate of the tube being connected to the positive conductor between the resistor **22** and the ground connection G. The tube **25** is preferably a cold cathode gas-filled tube, as for instance a 1C21 tube having a critical firing potential of 80 to 95 volts. Preferably, the firing range of the tube is limited to 90 to 92 volts.

The flash bulb socket **12**, of course, forms a permanent portion of the wiring diagram, and such socket is adapted to receive the base of the flash bulb **13** or to be suitably connected into whatever other electrical device is to be controlled or operated. For the sake of simplicity, the flash bulb **13** has been included in the wiring diagram, it being understood that the bulb does not form a portion of the wiring circuit as actually constructed and is, in effect, being substituted for the two electrical contacts represented by the socket **12**.

One terminal of the bulb **13** is connected electrically to the frame or ground connection G, and a conductor **26** leads from the other terminal of said bulb. A suitable condenser **27** is connected between the conductors **26** and **19**, and a suitable photo-electric cell **28** is also connected between the conductors **26** and **19** in parallel with the condenser **27**. The condenser **27** may desirably be a dry electrolytic capacitor of 50 microfarads and 150 volts rating, while the photoelectric tube may desirably be a 930 tube. A resistor **29** is connected in series with the photo tube **28**, the resistor being desirably of the magnitude of 33 megohms.

A third parallel circuit is provided between the conductors **26** and **19** and includes a pair of resistors **30** and **31** connected in series, the resistor **30** being desirably of the magnitude of 22 megohms while the resistor **31** may desirably be of the magnitude of 33 megohms. A condenser **32**, desirably 360 microfarads, is connected between the juncture of the resistors **30** and **31** and the juncture between the tube **28** and the resistor **29**, and the grid of the tube **25** is also connected to the juncture between the resistors **30** and **31**.

Values of the components in these circuits are not absolute or unalterable. On the contrary, values of all the components may be varied relative to variations in values of other components. For example, if an 884 tube were to be substituted for the 1C21, then the value of resistor **30** would be changed radically, or the resistor even dropped from the circuit altogether. It should be noted, however, that whatever relative values are used in the various positions must not be subject to much variation. In other words, components must be well constructed of good materials which must confine their operations within close tolerances. Thus, the electrical values of the various components of the circuit are subject to variation and the specific sizes and values given are illustrative of only one embodiment of the invention. It is obvious that the values may be varied to some extent by any person skilled in this art.

In the specific example given, the most critical values are the firing voltage of the tube **25** and the resistance values of the resistors **30** and **31**. As will appear more fully hereinafter, these resistors form a voltage divider, and a tolerance of 5% should not be exceeded in their values. It is known that commercially produced resistors of stated resistance values have actual resistances which may vary somewhat from the stated values. The tolerance of 5% means that the resistor should have an actual resistance value of within 5% of the value calculated as proper for the particular circuit at hand. In the example given, a value of 22 megohms is considered proper for

the resistor **30**, and for the best and most reliable operation of the slave flash unit, the resistor should have an actual resistance of within 5% of this value, and should be constructed so that it will not change its value during operation.

In the operation of devices herein described and illustrated, it will be assumed, for simplicity of explanation, that the flow of current is from the positive terminal of the battery or other source of power supply to the negative terminal thereon.

In the operation of the device as illustrated in Fig. 2, and with the flash bulb **13** in place, switch **21**, which is the equivalent of the switch **16** shown in Fig. 1, is closed and current flows from the positive pole of the battery **18** through conductor **20** and through switch **21**, through current limiting resistor **22**, through photographer's flash bulb or other load **13**, through condenser **27**, returning to the battery through bus, or conductor, **19**. Resistor **22** functions as a current limiter and prevents current from reaching a level sufficient to ignite the bulb **13** (or to operate any other load in place of bulb **13**), but at the same time allows the charging of condenser **27**. With this applied voltage, the condenser **27** begins to charge, and as the charging progresses, some of the current begins to flow to other parts of the circuit. It is to be noted that the value of resistor **22** may be changed in accordance with loads other than a photographer's flash bulb to be fired.

A potential is also applied across the neon lamp **23**, and as soon as this potential reaches approximately 70 volts, the gas in the neon lamp ionizes, causing the lamp to glow. The current flowing through the lamp also passes through the resistor **22** and the resistor **24**, and these resistors protect the lamp **23** from overloading and possibly burning out.

As a full potential of approximately 130 volts is reached, there being a voltage drop of about 5 volts across resistor **22**, there is applied a 130 volt potential across the glow discharge tube **25**. It is noted that this potential is applied between the plate and the cathode and that it is insufficient to cause firing of this tube so that no current is yet flowing therethrough. There is also a current flowing through the photo-electric tube **28** and the resistor **29**, the amount of such current being dependent upon the amount of light striking the photo-electric tube **28**. There is further a flow of current through the resistors **30** and **31**.

As pointed out hereinbefore, the resistors **30** and **31** function as a voltage divider or voltage network, and for the purposes of explanation, the juncture between these resistors will be designated by the letter A. For similar reasons, the juncture between the photo-electric tube **28** and the resistor **29** will be designated by the letter B so that the condenser **32** is connected between points A and B. Usually, when the unit is in operation, there is a small potential across the condenser **32** which may either be positive or negative, but which may be zero in the absence of any potential difference. This potential will depend upon the amount of light falling upon the photo-electric cell **28**, but since the condenser **32** is used as a coupling and blocking condenser, this idling potential need not be considered.

If the light entering the photo-electric cell **28** increases relatively slowly, as by the turning on of room lights, the striking of a match near the unit, or moving the unit from a dark room to a light room, the conductivity of the photo tube **28** increases, causing the voltage at point B to become more positive in relation to what it was previously, due to the voltage drop across the resistor **29**, and increasing the positive potential applied to the condenser **32**. The positive charge on the photo-electric cell side of the condenser **32** is thus increased, but because of its relatively small capacity, the increased voltage is quickly bled off through the resistor **31**. The result is that only a very small rise in voltage occurs at point A and that point B now has a more positive, i. e., less negative, potential with respect to point A. The

condenser **32** will have charged slightly, but the voltage at point A has not increased sufficiently to cause ionization in the tube **25** with the resultant firing of such tube. If the amount of light entering the photo-electric cell **28** increases very rapidly and in considerable volume relative to the light that existed previously, the resultant rise in voltage at point B is very sudden and of an amplitude proportional to the amount of light increase. The more positive charge placed rapidly on one side of the condenser **32** causes an immediate similar rise at point A because the resistor **31** is unable to bleed off this increased voltage as rapidly as it accumulates. Therefore, a rise in voltage occurs on the grid of the glow discharge tube **25**, and if this voltage increase is of sufficient amplitude, that is, if the grid or starter anode of the tube **25** is driven far enough positive, ionization will occur within the tube, causing the tube to fire. When this occurs, current flows out of condenser **27** through the flash bulb **13** and through the tube **25**, firing the bulb, or actuating a load. The voltage, about 130 volts, across the condenser **27** is sufficient to drive a current of several amperes momentarily through the tube **25** and the flash bulb **13**. The time elapsing from the instant that the photo-electric tube **28** is struck suddenly by a strong light until ignition begins in the flash bulb **13** is only a few micro-seconds. This length of time is completely negligible in flash bulb photography. Should it be desired to actuate a load other than firing a photographer's flash bulb, such load requiring less current than described above, then a limiting resistor may be inserted in series with the unit and the load.

After the bulb **13** has been fired, it no longer will provide a path for any appreciable amount of electrical current. Therefore, the voltage potential across the tube **25** rises at once to about 135 volts. This occurs because de-ionization of the tube will be encountered when the voltage across the tube is dropped to a relatively low value. The increase of voltage again lights the neon lamp **23**, which had gone out momentarily because of low voltage across the tube **25**. The on-off switch **21** may now be opened. The voltage across the lamp **23** then will drop to zero, and the small charge left in the condenser **27** will soon bleed off through the resistor **30**, the resistor **31**, the photo tube **28**, and the resistor **29**. The unit is now ready for another cycle; the fired flash bulb may be immediately removed, and a new bulb inserted.

It is emphasized that as the ambient or incident light falling upon the photo-electric tube varies upwardly and downwardly, the potential at point B will be similarly varied, but that the potential at point A will not undergo any radical change because of the bleeding-off action of resistors **30** and **31**. Hence, so long as the incident light does not increase extremely rapidly and to high values, the potential at point A, and therefore the potential upon the grid of the tube **25**, is not driven sufficiently positive to trigger the tube **25** and fire the flash bulb **13**. By this means, the unit may be subjected to relatively large changes in light value without firing the flash bulb **13** prematurely. It has been found that the light increase must occur in approximately one-tenth of a second or less, and that the increase of light must be of considerable magnitude as by that light increase furnished through the firing of a master flash bulb or electronic flash unit.

It is apparent that the unit may be placed in operable condition and left in this condition for a considerable period of time before firing of the flash bulb without excessive strain upon the battery **18**. After the unit has reached an operable condition, there is a very small current flow through the neon lamp **23**, through the resistors **30** and **31**, and through the photo-electric tube **28**. In each of these parallel circuits, there is incorporated a relatively high resistance which maintains the current at a very low value so that the drain upon the battery **18**

is negligible. It has been found that the unit may be left in this condition for a period of several hours and will still operate with full efficiency and will not suffer irreparable damage to the battery 18.

The extremely rapid operation of the unit is of the greatest importance, especially in photographic uses since the shutter of a camera is normally synchronized with the firing of the master flash bulb. The camera shutter, however, does not open at the instant the master bulb is fired, but rather a short interval of time thereafter. The master bulb is synchronized with the shutter in this fashion since flash bulbs do not fire instantaneously but rather require a short interval of time to "bloom" into maximum light emission. For this reason, camera shutters normally open an interval of time after the firing of the bulb has been commenced. Similarly, in the use of slave flash units, the light emitted by the master flash bulb does not instantaneously upon the firing of the master flash bulb reach a level sufficient to actuate the slave flash unit. Thus, although the present unit functions substantially instantaneously, it will not fire the slave flash bulb simultaneously with the master bulb because of the time lag inherent in the flash bulbs themselves and occasioned by the slight delay of flash bulbs in reaching maximum light emission after a firing current has been applied. The effect of these phenomena is illustrated somewhat graphically in Fig. 4, it being pointed out that the curves which have been plotted are not actual curves but are typical only. In Fig. 4, curve C represents the light emission of the master flash bulb as plotted against time, curve D represents a similar curve for a slave flash bulb, while curve E represents a similar curve for a second series slave flash bulb triggered not by the master flash bulb, but by the first slave flash bulb. The master flash bulb is fired at point F, and when its light emission has reached the value F', it is sufficient to actuate the slave flash unit and commence firing of the slave flash bulb as shown at point H. Similarly, when the first slave flash bulb has reached a level of light emission as shown at point J, the quantity of light is sufficient to trigger the second slave flash unit and to fire the same as shown at point K. With normal shutter synchronization, the camera shutter will open at point L, at which point the light emission of the three flash bulbs will have reached the points M shown upon the three curves. The camera shutter will remain open to point P at which point the light emission of the master flash bulb is slightly past its maximum, the light emission of the first slave bulb is very near its maximum light emission, and the light emission of the second slave bulb is approaching its maximum. Because of the inherent time lag in maximum light emission after firing of a bulb, it is not possible to utilize the maximum light values of all three bulbs unless the shutter remains open a longer period of time. Normally, in flash photography, exposures of the order of $\frac{1}{200}$ or $\frac{1}{400}$ of a second are employed and this is usually too short a period of time in which to utilize the full light-producing properties of a series of bulbs. A major portion of the light values may be utilized, however, due to the extremely rapid operation of the present unit, the only limiting factor being the lag in firing of the bulbs themselves.

With long exposures, any number of series of slave flash units may be employed, each series functioning in turn to trigger and fire the next adjacent series.

The unit may also be used as a bulb tester due to the fact that when a good flash bulb is inserted in the socket 12, the circuit to the condenser 27 will be completed upon closing of the switch 21, causing the condenser to charge. Obviously, a bad bulb will not complete the circuit and there will be no charging of the condenser. Whether or not the condenser has been charged may be ascertained by opening the switch 21 after it has been left closed with the bulb in position for a period of five to ten seconds. If the flash bulb is good and if the condenser has been charged, the neon lamp 23 will not be immediately extinguished upon opening of the switch 21 so that the lamp 23 will continue to glow for a few seconds after the switch 21 is open. If the flash bulb has an open circuit, there will be no charge accumulated in the condenser and the neon lamp 23 will be extinguished immediately when the switch 21 is opened.

As a normal procedure, it is preferable that the flash bulb 13 be inserted in position while the switch 21 is open. The bulb will not fire, however, even though the switch is closed while the bulb is being inserted unless the following events occur in sequence:

1. A good photographer's flash bulb is placed in the bulb socket and allowed to remain in position long enough for the condenser to charge,

2. The good bulb is not fired, but is removed without shifting the switch 21 to an open position, and

3. The same bulb or any other good flash bulb is replaced in the socket within five or ten seconds, before the condenser 27 has had an opportunity to discharge through the other components of the circuit, and sufficient light strikes the photo-cell at the same instant to render the tube 25 conductive and permit the condenser 27 to complete its discharge through the flash bulb.

Obviously, such a sequence of events is highly unlikely and in any event may be avoided by a short time delay before re-insertion of the flash bulb or by shielding the light port 17 so that light does not strike the photo-electric cell 28 and permit firing of the bulb.

No resetting of the device is required after a flash bulb or other unit has been fired or triggered, the removal of the burned flash bulb and the insertion of a new bulb being the only requirement. Of course, as pointed out hereinabove, it is desirable that the switch 21 be opened when the bulb is being replaced, but within a few seconds of the closing of the switch 21, the unit is again ready to operate and requires no attention from the user other than removal and insertion of flash bulbs and opening and closing of the switch 21.

Because the unit is entirely electronic, it operates very rapidly and is not affected adversely by temperature changes. The conductivity of the photo-electric cell or tube 28 is, of course, affected to some extent by temperature, but the automatic sensitivity control will automatically compensate for any altered conductivity of the photo tube. It might be stated that the range of currents passing through the photo tube is shifted very slightly by temperature changes, but that the function of the tube in giving an increase of potential under a certain increase of light for all purposes of this invention will remain unchanged.

A modified, and in some ways preferred, form of the wiring diagram is shown in Fig. 3 of the drawings. In this modification, the battery 18, the negative conductor 19, the resistor 20 and switch 21, along with the neon lamp 23, the resistor 24 and the glow discharge or thyratron tube 25, remain the same. Also, the arrangement of the flash bulb 13 is substantially the same, as well as the condenser 27, the photo-electric tube 28 and the resistor 29. The condenser 32 is replaced by a similar condenser 33, desirably of the value of about 200 microfarads, which is connected between the grid of the tube 25 and the juncture between the photo cell 28 and the resistor 29. A resistor 34, desirably of the value of about 560,000 ohms replaces the resistor 30, and the resistor 31 is replaced by a neon lamp 35, as for instance, a NE51 tube. An additional resistor 36 is connected between the grid of the tube 35 and the juncture between the resistor 34 and the neon lamp 35. The latter resistor may desirably have a resistance value of 15 megohms.

In the operation of this modified form, it will be assumed that the flow of current is from the positive terminal of the battery or power supply to the negative

terminal thereof for simplicity of explanation. The battery **18**, supplying approximately 135 volts, provides a current flowing through the resistor **22** and the closed switch **21** to the neon lamp **23** and through the resistor **24** to the negative conductor **19**. Here again, the neon lamp **23** almost immediately begins to glow, and the resistor **24** functions to limit current and protect the lamp against burning out. A potential is applied across the tube **25**, but no current flows at this point since ionization of the tube has not been initiated.

Further, current will flow to the condenser **27** through the flash bulb **13** to begin the charging of the condenser **27**, resistor **22** serving to limit the value of this current to avoid firing of the bulb **13**. As condenser **27** charges, a voltage is developed across it which soon approximates the battery voltage. Since a charged condenser is not a load and therefore will not cause a voltage drop across resistor **22**, the voltage across the charged condenser **27** may be considered as 130 volts. Current also flows through the resistor **34** and the neon lamp **35** commences to glow, providing a path for current to the negative conductor **19**. As stated hereinbefore, a small current flow also occurs through the photo-electric cell **28** and the resistor **29**, the quantity of current varying depending upon the intensity of light falling upon the tube **28**.

Again for the purposes of explanation, the juncture between resistor **36** and the grid of the tube **25** will be designated as point R, the juncture between the tube **28** and the resistor **29** as point S, and the juncture between the resistor **34** and the tube **35** as point T. As stated, the conductivity of the tube **28** will vary in accordance with the light falling thereon, and the voltage level at point S will vary accordingly.

The resistor **34** and the neon lamp **35** function to provide voltage regulation or a voltage network or circuit so that the voltage at point T will remain almost the same, within limits, regardless of the battery voltage, so long as the latter does not become very low or very high. This result is due to the characteristic of neon lamps that as the voltage across the lamp increases, it eventually reaches a critical point at which the lamp will ionize or fire, after which the lamp begins to glow. A further increase in voltage across the lamp will increase the amount of light given off by the lamp or the intensity of the glow. If a resistor of the proper value be inserted, however, in series with the voltage supply to the lamp, and the voltage then increased to the critical point or firing voltage of the lamp, the lamp will fire, but then the voltage across the lamp will be found to be a few volts less than the firing voltage of the lamp. A further increase in the voltage from the supply will result in a smaller increase in the light given off by the lamp, but the voltage across the lamp will remain almost the same as it was before the voltage supply was increased. The present invention makes use of this phenomenon to regulate the voltage at point T so that the latter remains substantially constant at all times. Unless the battery voltage goes below 80 volts, it is possible to maintain the voltage on the grid of the tube **25** almost at the critical or firing point of the tube **25** without danger that the voltage will go too high and cause firing of the tube **25** because of irregularities in the battery voltage or in the tolerances of the resistors in the circuit. The voltage on the grid of tube **25** will be the same as at the point T until a signal is impressed on the grid because the latter draws no current until the tube **25** fires and because there will be no voltage drop across the resistor **36** until an incoming signal appears at point R. From this, it is obvious that the resistor **36** serves the purpose of maintaining the grid of the tube **25** at the same voltage as point T, but at the same time allows the voltage of a desired signal passed by condenser **33** to appear upon the grid of the tube **25** without such voltage being removed by the voltage regulating circuit before it can appear on the grid to cause the tube **25** to fire. In this

manner, a positive D. C. voltage or positive bias is maintained on the grid of the tube **25** without danger of the bias changing and with the tube and its grid remaining subject to an increase of voltage delivered through the condenser **33**.

When light of considerable intensity falls upon the photo-electric cell **28**, the latter passes a proportionately large amount of current, and the voltage at point S becomes more positive with respect to negative than when there was a small quantity of light falling upon the photo-electric tube. Thus, as the light falling upon the photo-electric tube increases slowly, the voltage at point S increases slowly, and this voltage is also applied to the condenser **33**. Because condensers require time in order to charge, the voltage rise appearing at point S also appears at point R, but rather slowly. Because the voltage builds up slowly at R, it is bled off therefrom through the resistor **36** into the voltage regulating circuit. Hence, the unit adapts itself to changing light intensity without giving a premature firing of the flash bulb **13**.

If the light falling upon the photo-electric tube **28** increases suddenly and is of sufficient intensity, then the voltage rise at point S is quite sudden, whereupon, the condenser **33**, not having sufficient time to charge, passes most of the voltage rise to point R. Since this rise in voltage at point R is quite sudden, it cannot be bled off through the resistor **36** as rapidly as it accumulates, and therefore the voltage at point R and upon the grid of the tube **25** goes positive beyond the critical or firing point of the tube **25** causing the tube to become conductive and to close the circuit from the condenser **27** to the flash bulb **13**.

As soon as the bulb has ignited and burned, it becomes a fault in the circuit and there is no longer a path for electric current through it. The resistor **22** will not pass enough current to sustain ionization in the tube **25**, so that the latter is extinguished almost immediately as the flash bulb is ignited. Then the voltage in the circuit up to the socket **12** or the flash bulb **13** returns to normal, and the neon lamp **23**, which went out or was extinguished at the moment of firing, comes on again. There is no charging path for the condenser **27** and the same remains discharged or almost completely discharged. Further, there is very little voltage in the regulator circuit and neon lamp **35** is extinguished. The charge remaining in the condenser **27** is soon bled off or consumed through the photo-electric tube **28** and the resistor **29**.

When the unit shown in Fig. 3 is loaded with a good flash bulb and the switch **21** is closed, a decrease in the quantity of light falling upon the photo-electric tube **28**, whether it be sudden or gradual, momentarily will drive the point R more negative with respect to the regulated voltage, and therefore will not cause the unit to fire. The voltage at point R will quickly return to normal, of course, through the bleeding action of the resistor **36**, and any sudden increase in light thereafter from any level, if sudden enough and of sufficient amplitude, will cause the unit to fire.

From the foregoing, it is apparent that both modifications of the invention include a socket or other means for receiving a flash bulb or other electrical device in series with the firing or storage condenser **27** and the trigger tube **25**; that the firing of the tube **25** is controlled by the voltage upon its grid which is connected through a voltage regulating circuit to the photo-electric tube **28**; and that the blocking condensers **32** or **33** are provided in the connection betwen the grid and the photocell with a stabilizing connection through a resistor, either to the negative conductor or to a point of regulated voltage. In either case, unless the increase in light and the corresponding increase in potential occurs very rapidly, it is bled off as fast as it accumulates and is prevented from driving the grid sufficiently positive to trigger the tube **25** and fire the flash bulb **13**. In both of the circuits illustrated, the tube grid (points A and R) is maintained

relatively stable and is connected through a resistor (31 and 36) to a point of substantially constant voltage level (the bus 19 or the point T), the latter point being provided through a suitable voltage network.

Units constructed in accordance with this invention have proven very satisfactory and to possess substantially complete automatic sensitivity control. The devices have been placed in operation in a room receiving an ordinary quantity of daylight and have been transported suddenly into open sunlight without premature firing of the flash bulb occuring. At the same time, units have been employed in auditoriums and other large rooms lighted to the usual intensity with fluorescent fixtures with a one hundred-foot spacing betwen the master flash bulb and the slave flash bulb, and excellent results obtained. Outdoors, at night, these distances have been tripled.

In solid darkness at night, a camera equipped with a master flash bulb has been employed to photograph a burning slave flash bulb, Press #5 bulb being used, at a distance of 250 feet, using a shutter speed of 1/400 of a second. The photographiing of the burning slave bulb is indicative of the rapid operation of the unit, of its sensitivity, and of the synchronization of the slave unit with the camera shutter which in turn is synchronized with the master flash bulb. By the utilization of a second series slave unit adapted to be actuated by the burning of the flash bulb in the first slave unit, the total range in darkness may be extended to the magnitude of 500 feet, with a camera speed of one 100th of a second. Press #5 bulbs were used in both instances; however, large or small photographer's flash bulbs—any standard photographer's flash bulbs presently being manufactured—can be actuated by this unit. Of course, it is obvious that more than one bulb may be fired by the unit which has been described, because of the high voltage and relatively large capacity of the condenser 27, the additional bulbs being fired as is customary through branch conductors connected to the socket 12. Of course, where a fast shutter speed is not required and "bulb" or "open flash" exposures may be made, the range of lighting is unlimited since one series of slave units may be positioned to set off succeeding series almost to infinity.

It is further to be noted that the sensitivity of the device and its automatic sensitivity regulation permits the slave units to be fired by reflected light rather than by light coming directly from the master flash bulb. A light wall, a reflecting board, or any other reasonably reflective surface may be employed for this purpose, the window 17 of the unit merely being turned upon the housing 10 so as to be directed properly to receive such reflected light. In a case where a strong source of light is coming from the direction of the camera, this arrangement is desirable for maintaining the sensitivity of the unit and preventing the surge of light from the master flash bulb becoming lost in the general flood of light coming from the position of the camera. An example would be the photographing of a dark tunnel with a camera placed at the mouth of the tunnel in bright sunlight. Directing of the window 17 toward the brightly lighted mouth of the tunnel would cause the unit to adapt itself to a relatively high light intensity, and the surge of light from the master flash bulb might not be sufficient to fire the unit. If the window 17 is directed toward the walls of the tunnel, however, so as to receive light at a low intensity level until the master bulb is fired, the full sensitivity of the unit will be preserved and efficient operation obtained. Of course, the reflector 14 may be faced in any direction, regardless of the positioning of the window 17.

It is to be noted that various of the circuit components may be variable or adjustable to adapt the units to different operating conditions. With the inclusion of a suitable polarity reversing switch in that portion of the circuits including the photocell 28 and the resistor 29, the unit may be made responsive selectively to either a light increase or a light decrease. Further, the condensers 32 or 33 may be made variable to regulate the sensitivity of the unit to the speed of light increase or decrease. A large value of capacitance for these condensers causes the unit to respond to light that is increasing or decreasing slowly, while a low value of capacitance renders the unit responsive only to a light change of great rapidity.

A variable resistor or rheostat may be connected in shunt across the condensers 32 or 33 to limit the light level to which the unit will adapt itself. Beyond this level, the unit will function regardless of whether the light change is fast or slow.

The resistors 31 and 36 may be variable to regulate the sensitivity of the unit in regard to the magnitude of light change required for operation. Thus, the unit may be made responsive to large or small light changes.

If desired, a variable capacitor may be connected across the resistor 31 or the resistor 36 to introduce a time factor into the operation of the unit. With such a capacitor, the unit may be adjusted to be responsive only to a light change of a certain duration. By variation of the capacitance thus added to the circuit, the unit may be caused to function by light changes of slight duration or only by changes of long continuance.

It is pointed out that "radiation" as used herein includes visible light, invisible light such as ultra-violet or infrared light, heat radiation, and the like, which are capable of altering the electrical characteristics of an electrical circuit circuit component upon impingement thereon.

The foregoing description of the invention is explanatory thereof and various changes in the size, shape and materials, as well as in the details of the illustrated construction may be made, within the scope of the appended claims, without departing from the spirit of the invention.

What I claim and desire to secure by Letters Patent is:

1. The combination with a radiation-responsive control unit for supplying electrical impulses to electrical devices, including, a source of electrical energy, a glow discharge trigger grid tube having a plate and a cathode and a starter anode, the tube being characterized by having a critical firing potential, a storage condenser which supplies power for the electrical impulse, the plate-cathode circuit of the tube and the storage condenser being connected in parallel across the source of electrical energy, an outlet adapted to be connected electrically with the electrical device connected into the plate-cathode circuit of the tube in series with the storage condenser, whereby the tube controls the flow of an electrical impulse to the outlet from the condenser, a radiation-sensitive cell connected across the source of electrical energy, and a connection between the starter anode of the tube and the negative side of the radiation-sensitive cell for impressing on the starter anode the voltage potential of said negative side, of an automatic sensitivity control including, a blocking condenser in the connection between the starter anode and the radiation-sensitive cell, an electrical control circuit connected in parallel across the source of electrical energy and including a resistor connected in series through a juncture with an electrical circuit means for conducting electricity at a potential below the critical firing potential of the tube and for creating a potential difference across itself of such magnitude that the juncture between the resistor and said circuit means is biased to a potential more positive than the potential of the tube cathode and less positive than the critical firing potential of the tube, and means for connecting the starter anode and said juncture for continuously biasing the starter anode to the potential of said juncture.

2. The combination as set forth in claim 1, wherein the electrical circuit means is a resistor.

3. The combination as set forth in claim 1, wherein the electrical circuit means is a neon lamp.

4. A light-responsive control unit for supplying electrical impulses to electrical devices, including, a source of electrical energy, a glow discharge trigger grid tube

having a plate and a cathode and a starter anode, the tube being characterized by having a critical firing potential, a storage condenser, the tube and storage condenser being connected in parallel across the source of electrical energy, an outlet adapted to receive an electrical device connected in series with the tube and the storage condenser, a photo-electric cell connected in parallel across the source of electrical energy, a blocking condenser connected between the negative side of the cell and the starter anode, an electrical control circuit connected in parallel across the source of electrical energy and including a resistor connected in series through a juncture with an electrical circuit means for conducting electricity at a potential below the critical firing potential of the tube and for creating a potential difference across itself of such magnitude that the juncture between the resistor and said circuit means is biased to a potential more positive than the potential of the tube cathode and less positive than the critical firing potential of the tube, and a resistor connected between the starter anode and said juncture.

5. A light-responsive control unit for supplying electrical impulses to electrical devices, including, a source of direct-current electrical energy of substantially constant voltage, a glow discharge trigger grid tube having a plate and a cathode and a starter anode, the tube being characterized by having a critical firing potential, a storage condenser, the tube and storage condenser being connected in parallel across the source of electrical energy, an outlet adapted to receive an electrical device connected in series with the tube and the storage condenser, a photo-electric cell connected in parallel across the source of electrical energy, a blocking condenser connected between the negative side of the cell and the starter anode, an electrical control circuit connected in parallel across the source of electrical energy and including a resistor connected in series through a juncture with an electrical

circuit means for conducting electricity at a potential below the critical firing potential of the tube and for creating a potential difference across itself of such magnitude that the juncture between the resistor and said circuit means is biased to a potential more positive than the potential of the tube cathode and less positive than the critical firing potential of the tube, and means for connecting the starter anode and said juncture for continuously biasing the starter anode to the potential of said juncture.

6. A light responsive control unit for supplying electrical impulses to electrical devices as set forth in claim 5, wherein the resistor of the electrical control circuit is a high resistance resistor, and the electrical circuit means of the control circuit is a high resistance resistor, said high resistance resistors being connected in series across the source of electrical energy, and the juncture between the said resistors being the juncture to which the starter anode is connected.

7. A light responsive control unit for supplying electrical impulses to electrical devices as set forth in claim 5, wherein the electrical circuit means of the control circuit is a neon tube, and a resistor between the starter anode and the aforesaid juncture.

References Cited in the file of this patent

UNITED STATES PATENTS

2,073,247	Miller	Mar. 9, 1937
2,509,005	Lord	May 23, 1950
2,509,967	Davis	May 30, 1950
2,546,734	Farber	Mar. 27, 1951
2,616,289	Kleckner	Nov. 4, 1952
2,628,317	Singer	Feb. 10, 1953

OTHER REFERENCES

Article by Southworth in the "Radio and Television News," October 1949, pages 64 and 65.