July 16, 1935. J. A. STROMBERG 2,008,087

METALLIC STRUCTURE

Filed Feb. 23, 1932

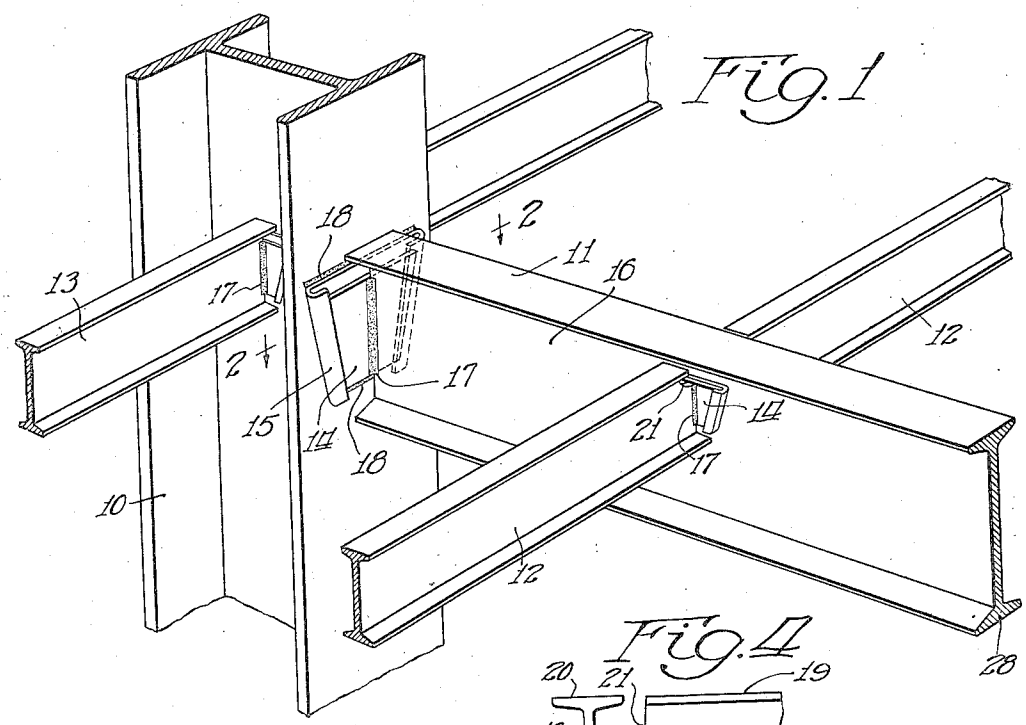

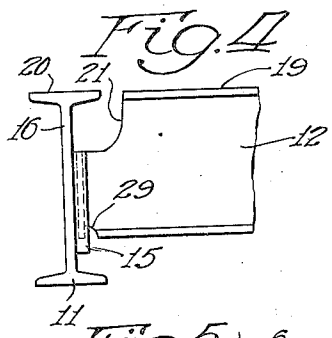

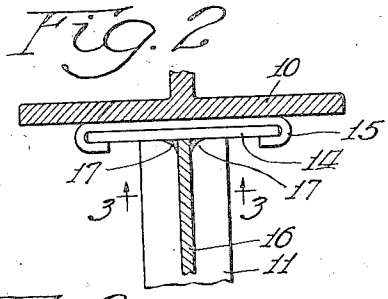

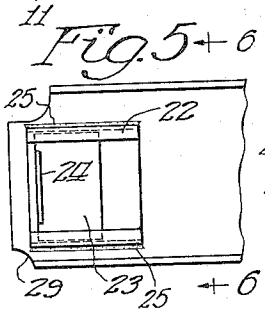

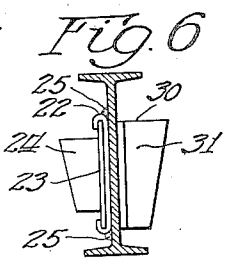

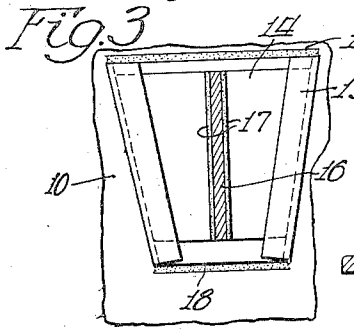

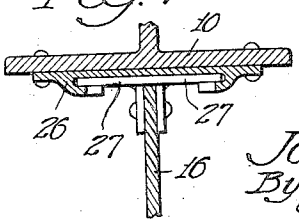

Inventor
John A. Stromberg
By Fabel & Banning
Attys.

Patented July 16, 1935

2,008,087

UNITED STATES PATENT OFFICE

2,008,087

METALLIC STRUCTURE

John A. Stromberg, Chicago, Ill., assignor to Associated Engineers Company, Chicago, Ill., a corporation of Illinois

Application February 23, 1932, Serial No. 594,459

5 Claims. (Cl. 189—36)

My invention relates to skeleton metallic structures such as are used for building and the like, and has for its object the provision of means whereby such a structure may be more readily assembled; whereby when thus assembled it may be more readily adapted to withstand strains or momentary overloads; whereby in one of its forms the assembling of the structure may be done in such a manner that it may be readily disassembled; and whereby greater strength may be obtained at the joints than with riveted joints, if such greater strength is desired.

I will explain my invention more in detail by referring to the accompanying drawing illustrating several embodiments thereof in which,—

Fig. 1 is a fragmentary perspective view illustrating one form which my invention may take;

Fig. 2 is a sectional view along line 2 of Fig. 1;

Fig. 3 is a sectional view along line 3—3 of Fig. 2;

Fig. 4 is an enlarged side view of a detail feature of one form of the invention as shown in Fig. 1;

Fig. 5 is a fragmentary side view of a modified form;

Fig. 6 is a sectional view on line 6—6 of Fig. 5; and

Fig. 7 is a transverse sectional view of a modified form of the invention.

Fig. 1 illustrates a fragmentary portion of a skeleton framework of a building, which fragmentary illustration is thought to be all that is needed to illustrate the same. In this figure I show one of the columns 10 of a building which is adapted to support girders such as a girder 11, which girders in turn support beams 12—12. I have also shown the column 10 as supporting a beam 13.

My invention contemplates that the girder 11 has a plate 14 welded to its end face, which plate has converging sides which are adapted to seat in a supporting socket 15 welded to the column 10 and having correspondingly sloping pockets to receive the plate or tongue 14.

In the general construction of steel skeleton buildings the girders are attached to the columns by means of angles riveted both to the girder web and to the column. In general, rivets are used which are placed about three inches apart and each is generally designed to support a stress of about five thousand pounds, so that throughout the length of the riveted area the resistance to shear is about twenty-five hundred pounds per inch.

In the construction which I propose, the plate 14 is fillet welded to the girder web 16 as shown at 17—17 and by thus fillet welding these two parts together I am able to increase the shearing stress which such a union may withstand over and above that which is obtainable by riveting. A fillet weld such as that outlined may withstand a shearing stress of six thousand pounds per inch if fillet welded on both sides as is shown.

Similarly I may fillet weld the socket 15 as shown at 18, or I may rivet it along its upper and lower surface, depending upon what appears most feasible in the case at hand. The columns and girders and beams are usually rolled at the mill and then are transported to a structural iron establishment where the plates and sockets and other fixtures presently to be described, are welded in place, thus to eliminate such welding in the field. This is done because field welding has not proven as successful as desired because of the uncertainty of the conditions.

The columns with their necessary sockets and the girders and beams with their necessary tongues and plates are then taken into the field and swung into position so that the tongues 14 fall readily into the sockets, thus to mount the girders or beams in place without the necessity of either welding or riveting. This decreases the field work necessary in assembling the structure. In those cases where the flange 23 is wider than the opening between the overhanging edges of the sockets 15, I cut away a small portion of the girder or beam as shown at 29 (Figs. 4 and 5). By means of my improved union or joint, I am able to secure a most important advantage over and above the riveted structures. I find that a girder, for instance, if momentarily overloaded may bend along natural lines without subjecting the column to bending stresses, and such momentary distortion of the structure is absorbed by the resilience of the plates 14, thus permitting the girder to resume its normal form when such overload is removed. I consider this a very valuable feature of my invention.

If the beams 12 are not to have their upper surfaces 19 aligned with the upper surface 20 of the girder, then of course, no special construction need be employed other than what has been heretofore described in order to mount such beams in position because the clearance between the top of the beam 19 and the top of the girder 20 may then be so chosen that the girder can be mounted into place and dropped into position. Should it be desired, however, to have less clearance than what would be necessary to carry out the above intention, or should it be desired to have the up-

per surfaces of girder and beam aligned, then I utilize the structure shown in Figs. 4, 5 and 6.

Fig. 4 shows a structure which I utilize at one extremity of the girder and Figs. 5 and 6 show the structure which I utilize at the other extremity of the girder. Sometimes it is necessary to duplicate the structure of Figs. 5 and 6 at both extremities. The structure for one end of the beam as shown in Fig. 4 consists in cutting away as shown at 21 a portion of the beam and providing the extremity of the beam with a plate 14. This plate cooperates with a socket 15 such as illustrated and described heretofore. It will be seen that if the beam of Fig. 4 were raised a certain amount, that the tongue or plate 14 would be clear of the socket 15 because of the converging nature of the sides of the elements 14 and 15. It will be at once apparent, however, that under these conditions there would be interference if the opposite end of the beam had similar means for mounting in place. In order to avoid such interference, I utilize the form of union as shown in Figs. 5 and 6 in which one side of the web of a beam is provided with a longitudinally extending socket 22 in which an angle plate 23 is slidably mounted, this plate having the outstanding leg 24. The opposite side of the web may have the non-adjustable angle 30 with its outstanding leg 31. These plates 23 remain in the position shown in Figs. 5 and 6 while swinging the beam into position to align the plate 14 with the socket 15. Thereupon the sliding plate 23 is moved outwardly until the tongue 24 registers with corresponding socket 15 in the other girder, whereupon the beam may be dropped into position. The sockets 22 are of course suitably welded to the web as shown at 25. In this manner there will be no interference between the beam ends and the girders between which the beam is to be mounted.

In Fig 7, I have shown the assembling feature of my invention as applied to a structure in which rivets may be employed, if so desired. In this particular case I construct the socket portion 26 as shown so that it may be riveted to the column to properly receive the tongues 27—27 forming parts of angles riveted to the web 16 of the girder. The socket section 26 likewise may be riveted to the column if so desired, although as readily apparent this structure of Fig. 7 lends itself equally well to fillet welding.

From what has thus been described, it is thought the nature of my invention is readily apparent to those skilled in the art.

Having thus described what seems to me at the present time to be the approved forms without intending to limit myself thereto, I claim the following:

1. In a metallic skeleton framework for buildings and the like, means for connecting the end of an I-beam to a supporting member of the framework comprising a pair of plates one having tapered opposed grooves on one face thereof, and the other having its side edges tapered to seat in said grooves, one of said plates being fixed to the web of said I-beam and extending transversely thereto, the other of said plates being fixed on said member.

2. In a metallic skeleton framework, means for making a web to web joint between two beams having top and bottom flanges comprising a plate member providing a socket on the web of one beam, a vertical mounting plate on the end of the web of the other beam, said plate being insertible between the socket and top flange by horizontal movement of one beam relative to the other.

3. In a metallic skeleton framework, means for making a web to web joint between two beams having top and bottom flanges comprising a plate member providing a socket on the web of one beam, a vertical mounting plate on the end of the web of the other beam, said mounting plate being divided into two sections along the web, one section being movable lengthwise of the web.

4. In a metallic skeleton framework, means for attaching the end of a beam having top and bottom flanges connected by a web to a supporting member which comprises a pair of plates having interfitting side edge portions, one of said plates being fixed on the supporting member, the other plate being fixed to the end of the web of the beam and extending outwardly from both sides of the web to provide side bracing for said beam.

5. In a metallic skeleton framework, means for attaching the end of a beam having top and bottom flanges connected by a web to a supporting member which comprises a pair of plates having interfitting side edge portions, one of said plates being fixed on the supporting member, the other plate being fixed to the end of the web of the beam and extending outwardly from both sides of the web to provide side bracing for said beam, said web and the plate thereon being secured together by fillet welding.

JOHN A. STROMBERG.