Dec. 22, 1964 J. E. GILBERTSON 3,162,322

SANITARY DISPENSER FOR CARTRIDGES HOLDING FLUID MEDICANTS

Filed March 29, 1962

Fig. 1

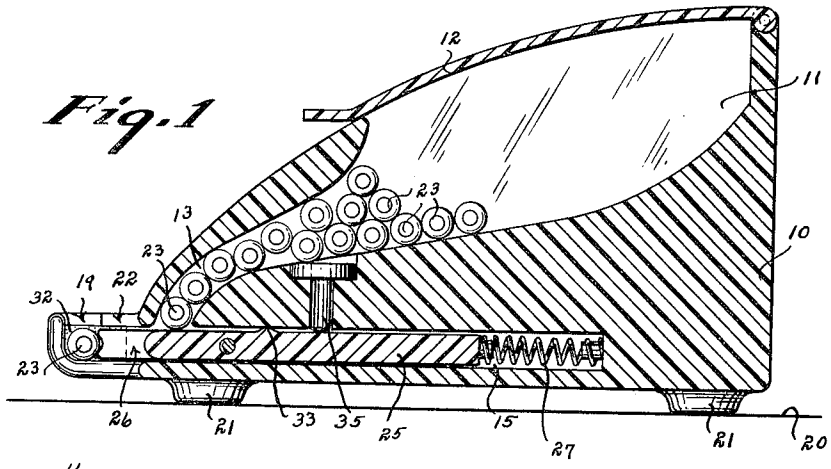

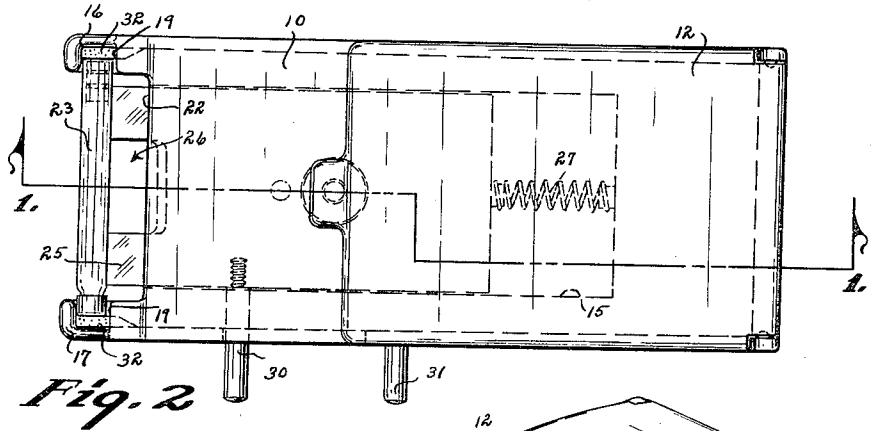

Fig. 2

Fig. 3

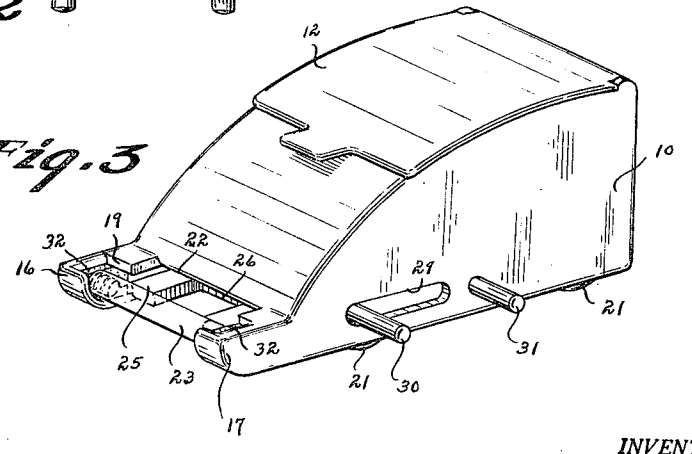

INVENTOR.
JOHN E. GILBERTSON
BY

WITNESS
NORMAN G. TRAVISS

Talbert Dick & Darley
ATTORNEYS

United States Patent Office 3,162,322 Patented Dec. 22, 1964

3,162,322

SANITARY DISPENSER FOR CARTRIDGES HOLDING FLUID MEDICANTS

John E. Gilbertson, 3209 Douglas Ave., Des Moines, Iowa

Filed Mar. 29, 1962, Ser. No. 183,564
7 Claims. (Cl. 221—135)

This invention relates to a dispenser means and more particularly to one that will hold, sanitize, and dispense cartridges holding fluid medicants for use in injection pump guns.

The practice of dentistry and medicine requires the injection of various medicines into patients. The common method was to fill the barrel of the gun with the liquid to be injected, insert the hollow needle into the patient, and manually force the plunger forwardly, thereby expelling the liquid into the patient. In recent times the liquid filling of the gun has been greatly simplified. Many practitioners now use pre-filled cartridges. These cartridges are of tubular construction having a movable sealing piston in one end and a rupturable seal at its other end. The pre-filled cartridge is placed in the injection gun, and the unit is ready for use. While these cartridges do greatly facilitate the giving of necessary injections, there are certain objections and problems. The cartridges are received by the doctor in a single container holding a considerable number of cartridges in vertical assembly. Firstly, the cartridges are rather difficult to individually remove from the container, and secondly, the removal of a cartridge requires that its end portion be engaged by the hand of the one effecting the removal of the cartridge. Experts of sanitation are of the opinion that this method of handling the cartridge may well contaminate the cartridges and thus spread disease.

Therefore one of the principal objects of my invention is to provide a dispenser device for individually dispensing cartridges holding liquid medicants.

A further object of this invention is to provide a cartridge dispenser that eliminates the objectionable manual touching of the two end areas of the cartridges.

A still further object of this invention is to provide a cartridge dispensing device that disinfects the ends of the cartridge as it is dispensed.

A still further object of this invention is to provide a dispensing machine that will not become clogged or jammed by the objects being dispensed.

A still further object of this invention is to provide a dispensing device that is easily manually actuated.

Still further objects of my invention are to provide a dispensing machine that is economical in manufacture, durable in use, and refined in appearance.

These and other objects will be apparent to those skilled in the art.

My invention consists in the construction, arrangements, and combination, of the various parts of the device, whereby the objects contemplated are attained as hereinafter more fully set forth, specifically pointed out in my claims, and illustrated in the accompanying drawings, in which:

FIG. 1 is a longitudinal vertical sectional view of my cartridge dispenser taken on line 1—1 of FIG. 2;

FIG. 2 is a top plan view of the dispenser; and

FIG. 3 is a perspective view of the device and more fully illustrates its construction.

In these drawings I have used the numeral 10 to generally designate the housing portion of my dispenser. The numeral 11 designates a multiple cartridge holding compartment in the upper rear of the housing. A lid 12 closes the upper portion of this compartment 11. The numeral 13 designates a wide cartridge passageway throat extending forwardly and downwardly from the forward bottom end of the compartment 11. The outer

forward end of the throat communicates with the top of a wide horizontal slot bearing 15, as shown in FIG. 1. The forward end area of this slot 15 is closed at each side area by the wall barriers 16 and 17, respectively. These barriers also extend in a hook around the corners of the forward open end of the slot 15, as shown in FIG. 2. The extreme forward top of the slot 15 is cut away to provide a top opening 19. The housing 10 is held a distance above a supporting surface 20 by feet 21. The forward end top of slot 15 back of the opening 19 has a centrally located cut-away opening 22. The numeral 23 designates the cartridges and the width of the compartment 11, throat 13, and at least the forward end of the slot 15 is greater than that of the lengths of the cartridges. Slidably mounted in the horizontal slot 15 is a tongue plate piston 25. The central forward area of this plate piston is cut away to provide an open area 26. This plate piston is yieldingly held in its forward sliding position by a spring 27 positioned between the back of the tongue piston and the rear wall of the slot 15. When the tongue piston is in such forward position, it will extend under and close the forward outlet of the throat 13 as shown in FIG. 1, and when the tongue piston is in a rear sliding position, its forward end will be to the rear of the outlet end of the throat 13. To facilitate the manual actuation of the piston tongue, I provide a horizontal slot 29 through the side wall of the housing and secure to the tongue piston a handle 30. The handle 30 extends through the slot 29 and has to its rear a fixed handle 31 on the side of the housing 10. By manually squeezing the two handles 30 and 31 together, the handle 30 will be moved to the rear carrying with it the tongue piston 25. When the forward end of the tongue piston clears the exit end of the throat 13, a cartridge 23 will by force of gravity, drop downwardly into the slot cavity 15, and forward of the tongue piston. By merely releasing the handle 30, the spring 27 will force the tongue piston forwardly, thereby moving the dropped cartridge forwardly into the open end of the slot 15 and to the limiting stop hook barriers 16 and 17, as shown in FIG. 3. On the inner forward two side walls of the slot 15 I have mounted a disinfectant absorbing block 32 of flexible resilient material such as sponge rubber. When the dropped cartridge is moved to the barriers 16 and 17, its two ends will engage these two disinfecting pads 32 and thereby be sterilized. When the dropped cartridge is needed, it is merely necessary to graps the cartridge between the finger and thumb and lift it upwardly and away from my dispenser. However, due to the construction of my dispenser and particularly the cut-away areas 22 and 26, the cartridge can only be grasped at its central area and thus the ends of the cartridge will remain sanitary and not be contaminated from manual handling. Each time the handle 30 is actuated, another cartridge will be moved into the open forward end of the slot 15. To prevent the undersirable jamming of the tube cartridges in the throat 13, I provide an agitation means. A projection 33 is formed on the top of the tongue piston, and when the tongue piston is moved rearwardly it will contact and move the loosely mounted headed post 35, which has its upper end communicating with the inside bottom of the throat passageway 13. A new supply of cartridges is deposited in the compartment 11 by way of the lid 12.

Some changes may be made in the construction and arrangement of my sanitary dispenser for cartridges holding fluid medicants without departing from the real spirit and purpose of my invention, and it is my intention to cover by my claims, any modified forms of structure or use of mechanical equivalents which may be reasonably included within their scope.

I claim:

1. In a dispensing means for dispensing liquid holding tubular members used in the field of medicine and dentistry, in combination,
a housing having a compartment for holding a plurality of tubular members,
said housing having a horizontal slot therein,
said housing having notches in walls enclosing said horizontal slot,
a passageway in said housing having one end communicating with the inside bottom of said compartment and its other end communicating with the inside top of said horizontal slot,
a piston slidable in said horizontal slot, closing said passageway when in a forward sliding position, and to the rear of said passageway when in a rear sliding position,
said piston having a notch in the forward central end thereof to accommodate the finger and thumb of one removing a tubular member from said horizontal slot,
and a disinfectant means associated with said horizontal slot.

2. In a dispensing means for dispensing liquid holding tubular members used in the field of medicine and dentistry, in combination,
a housing having a compartment for holding a plurality of tubular members,
said housing having a horizontal slot therein,
said housing having side wall members on opposite ends of said horizontal slot,
a disinfectant holding means on each of the two side wall members,
and a piston slidably mounted in said slot for moving a tubular member into a position where its two ends will contact said disinfectant holding means.

3. In a dispensing means for dispensing liquid holding tubular members used in the field of medicine and dentistry, in combination,
a housing having a compartment for holding a plurality of tubular members,
said housing having a horizontal slot therein,
said housing having side wall members on opposite ends of said horizontal slot,
a disinfectant holding means on each of the two side wall members,
a piston slidably mounted in said slot for moving a tubular member into a position where its two ends will contact said disinfectant holding means,
said two disinfectant means being of flexible resilient liquid absorbing material.

4. In a dispensing means for dispensing liquid holding tubular members used in the field of medicine and dentistry, in combination,
a housing having a compartment for holding a plurality of tubular members,
said housing having a horizontal slot therein,
said housing having notches in walls enclosing said horizontal slot,
a passageway in said housing having one end communicating with the inside bottom of said compartment and its other end communicating with the inside top of said horizontal slot,
a piston slidable in said horizontal slot, closing said passageway when in a forward sliding position, and to the rear of said passageway when in a rear sliding position,
said piston having a notch in the forward central end thereof to accommodate the finger and thumb of one removing a tubular member from said horizontal slot,
a disinfectant means associated with said horizontal slot,
and a handle member on said piston means to facilitate its manual movement.

5. In a dispensing means for dispensing liquid holding tubular members used in the field of medicine and dentistry, in combination,
a housing having a compartment for holding a plurality of tubular members,
said housing having a horizontal slot therein,
said housing having notches in walls enclosing said horizontal slot,
a passageway in said housing having one end communicating with the inside bottom of said compartment and its other end communicating with the inside top of said horizontal slot,
a piston slidable in said horizontal slot, closing said passageway when in a forward sliding position, and to the rear of said passageway when in a rear sliding position,
said piston having a notch in the forward central end thereof to accommodate the finger and thumb of one removing a tubular member from said horizontal slot,
a disinfectant means associated with said horizontal slot,
a handle member on said piston to facilitate its manual movement,
and a spring means for yieldingly holding said piston means in one direction of its sliding movement.

6. In a dispensing means for dispensing liquid holding dispensable members used in the field of medicine and dentistry, in combination,
a housing having a compartment for holding a plurality of dispensable members,
said housing having a horizontal slot therein,
said housing having notches in walls enclosing said horizontal slot,
a passageway in said housing having one end communicating with the inside bottom of said compartment and its other end communicating with the inside top of said horizontal slot,
a piston slidable in said horizontal slot, closing said passageway when in a forward sliding position, and to the rear of said passageway when in a rear sliding position,
said piston having a notch in the forward central end thereof to accommodate the finger and thumb of one removing a dispensable member from said horizontal slot,
and a disinfectant means associated with said horizontal slot.

7. In a dispensing means for dispensing liquid holding tubular members used in the field of medicine and dentistry, in combination,
a housing having a compartment for holding a plurality of tubular members,
said housing having a horizontal slot in its lower forward end,
said housing having therein a notch in the top forward area, bottom forward area and central forward end wall area, in communication with said horizontal slot,
a passageway in said housing having one end communicating with the inside bottom of said compartment and its other end communicating with the inside top of said horizontal slot,
a piston slidable in said horizontal slot, closing said passageway when in a forward sliding position and to the rear of said passageway when in a rear sliding position,
an arcuate shaped projection on the forward top portion of said piston,
a headed post in said housing having its upper headed end in communication with the inside bottom of said passageway and its lower end in communication with said horizontal slot, and in the sliding path of said arcuate shaped projection on said piston, where-

by said post will engage said projection when said piston slidably moves rearwardly,

said piston having a notch in the forward central end thereof to accommodate the finger and thumb of one removing a tubular member from said horizontal slot,

said housing having side wall members on opposite ends of said horizontal slot,

a disinfectant holding means on each of the two side wall members,

said two disinfectant means being of flexible, resilient, liquid absorbing material,

a handle member on said piston means to facilitate its manual movement,

and a spring means for yieldingly holding said piston means in one direction of its sliding movement.

References Cited in the file of this patent

UNITED STATES PATENTS

513,472	Alexander	Jan. 30, 1894
693,933	Webb	Feb. 25, 1902
926,316	Cairns	June 29, 1909
979,318	Marriott	Dec. 20, 1910
2,210,313	Eckert	Aug. 6, 1940
2,342,747	Mayer	Feb. 29, 1944
2,419,050	Ashwood	Apr. 15, 1947
2,716,973	Desi	Sept. 6, 1955
2,834,513	Schupp	May 13, 1958