US00D697215S

(12) United States Design Patent

Billard et al.

(10) Patent No.: US D697,215 S

(45) Date of Patent: ** Jan. 7, 2014

(54) **APPARATUS FOR ACQUISITION OF FACIAL PARAMETERS**

(75) Inventors: **Armand Billard**, Vincennes (FR); **Philippe Pinault**, Créteil (FR); **Laurent Roussel**, Les Pavillons sous bois (FR)

(73) Assignee: **Essilor International (Compagnie Generale d'Optique)**, Charenton le Pont (FR)

(**) Term: **14 Years**

(21) Appl. No.: **29/429,588**

(22) Filed: **Aug. 14, 2012**

(30) **Foreign Application Priority Data**

Feb. 15, 2012 (EM) 001992538-0001

(51) **LOC (10) Cl.** **24-01**

(52) **U.S. Cl.**
USPC **D24/186**

(58) **Field of Classification Search**
USPC D24/186, 133, 135, 137, 138, 150–151, D24/158, 107; 600/131, 184–200, 476; 606/191–196; 320/114; 348/65
See application file for complete search history.

(56) **References Cited**

U.S. PATENT DOCUMENTS

D492,997	S	*	7/2004	DiStasio	D24/158
D547,437	S	*	7/2007	Asai	D24/107
D548,326	S	*	8/2007	Asai	D24/107
D557,403	S	*	12/2007	Asai	D24/107
D564,663	S	*	3/2008	Udagawa et al.	D24/158
D590,506	S	*	4/2009	Krishnan	D24/186
D590,507	S	*	4/2009	Krishnan	D24/186
D603,968	S	*	11/2009	Brefka	D24/186
D618,346	S	*	6/2010	Sisko et al.	D24/137
D621,515	S	*	8/2010	Chua et al.	D24/186
D623,754	S	*	9/2010	Tuhkanen	D24/186
D634,435	S	*	3/2011	Chua et al.	D24/186
D654,178	S	*	2/2012	Antonio et al.	D24/187
D654,597	S	*	2/2012	Hiramura	D24/186
D659,840	S	*	5/2012	Cheng et al.	D24/186
2004/0125996	A1	*	7/2004	Eddowes et al.	600/476

* cited by examiner

Primary Examiner — T. Chase Nelson
Assistant Examiner — Mark Cavanna
(74) *Attorney, Agent, or Firm* — Gardere Wynne Sewell LLP

(57) **CLAIM**

The ornamental design for an apparatus for acquisition of facial parameters, as shown and described.

DESCRIPTION

FIG. **1** is a front perspective view of an apparatus for acquisition of facial parameters in accordance with the invention;
FIG. **2** is a front view of the apparatus for acquisition of facial parameters shown in FIG. **1**;
FIG. **3** is a rear view of the apparatus for acquisition of facial parameters shown in FIG. **1**;
FIG. **4** is right side view of the apparatus for acquisition of facial parameters shown in FIG. **1**;
FIG. **5** is a left side view of the apparatus for acquisition of facial parameters shown in FIG. **1**;
FIG. **6** is a top view of the apparatus for acquisition of facial parameters shown in FIG. **1**;
FIG. **7** is a bottom view of the apparatus for acquisition of facial parameters shown in FIG. **1**; and,
FIG. **8** is a rear perspective view of the apparatus for acquisition of facial parameters shown in FIG. **1**.
The broken lines are included for the purpose of illustrating portions of the apparatus for acquisition of facial parameters that form no part of the claimed design.

1 Claim, 6 Drawing Sheets

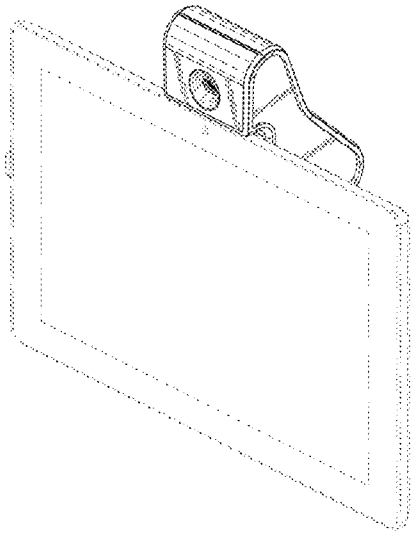

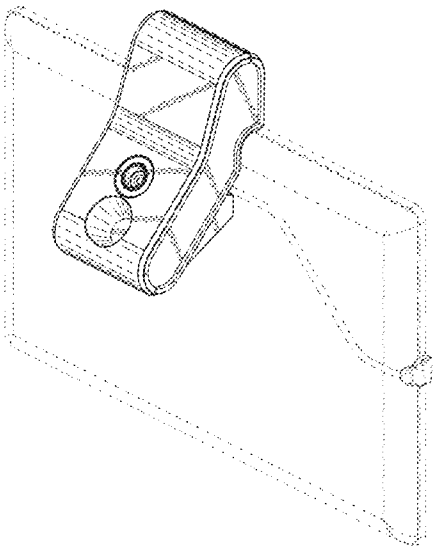

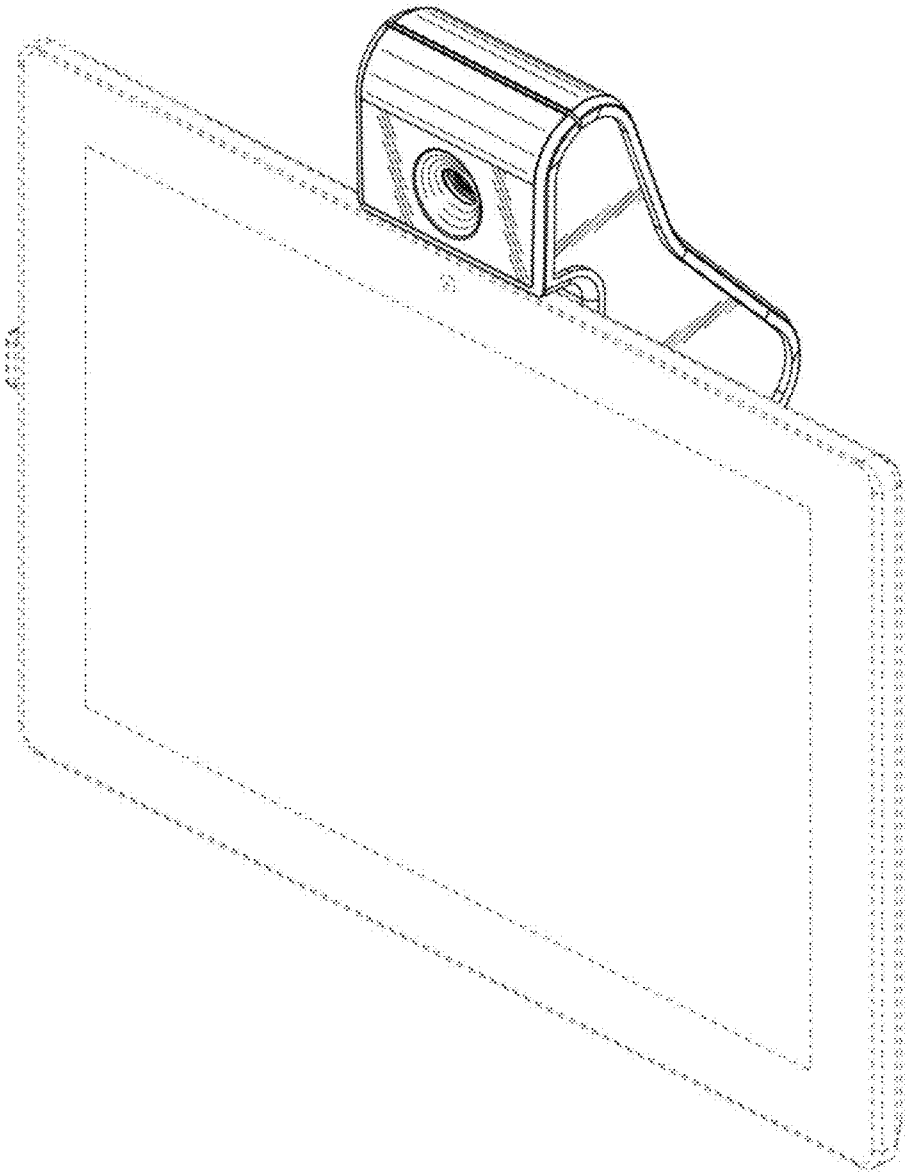

FIG. 1

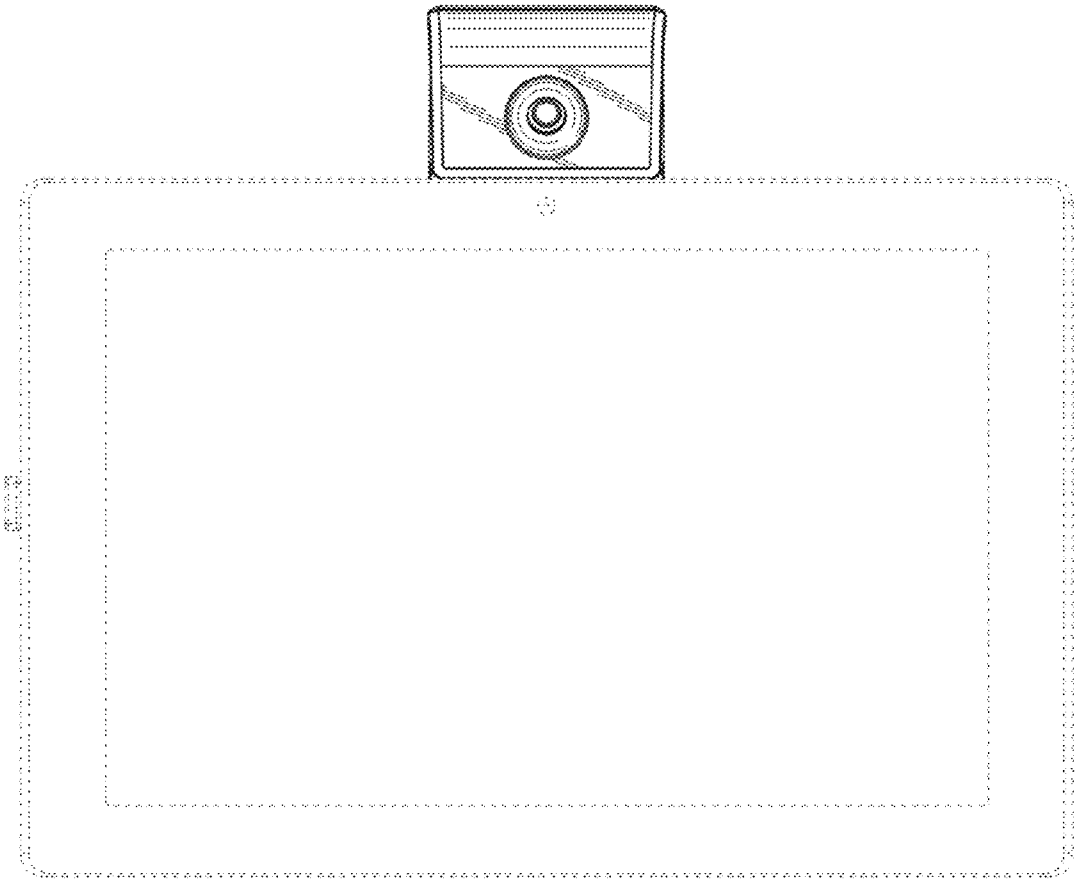

FIG. 2

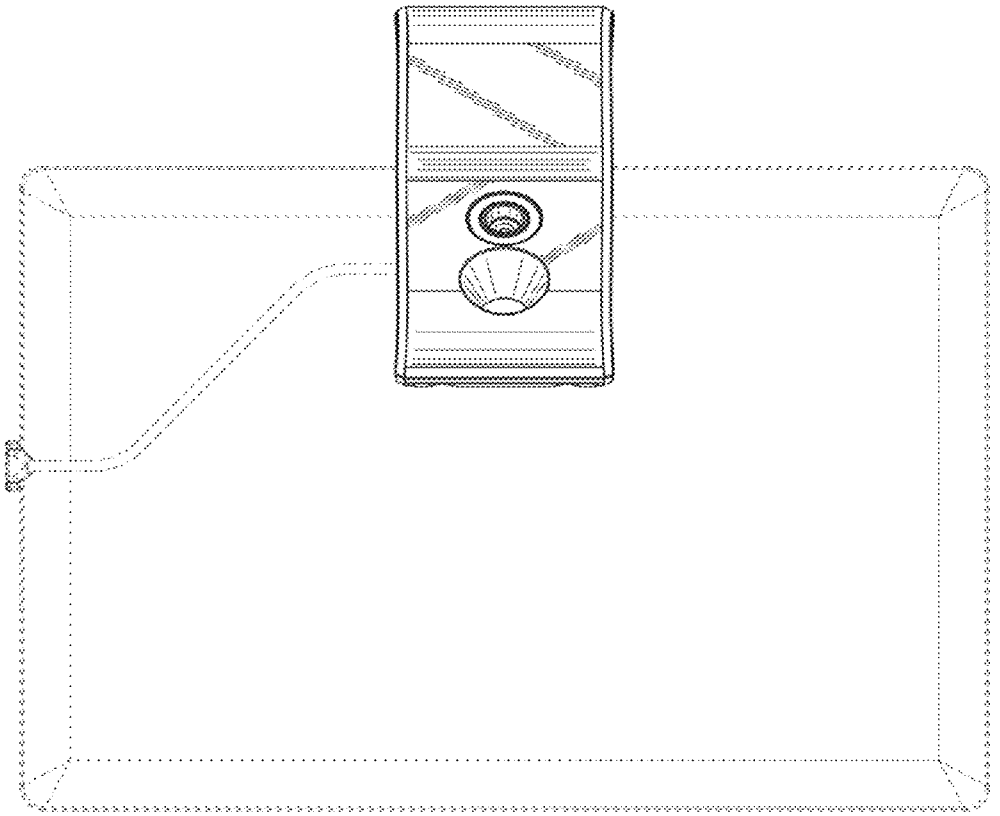

FIG. 3

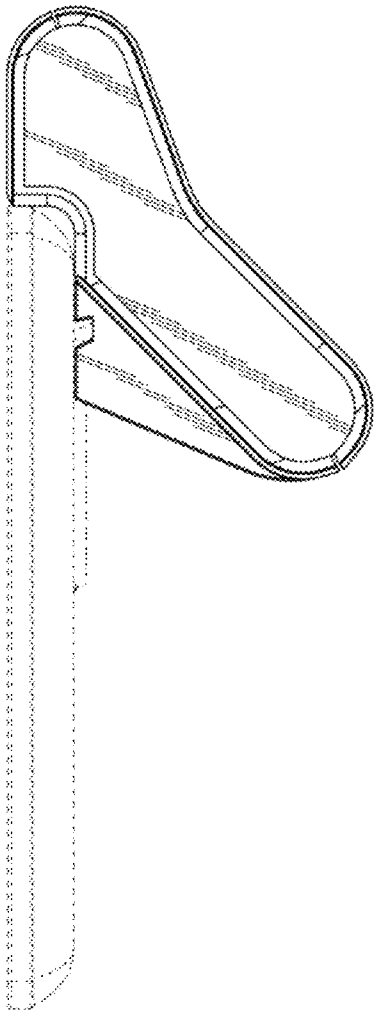

FIG. 4

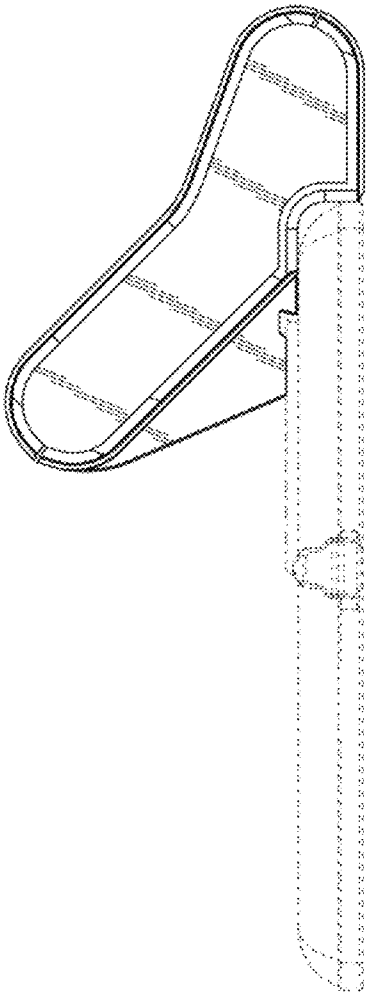

FIG. 5

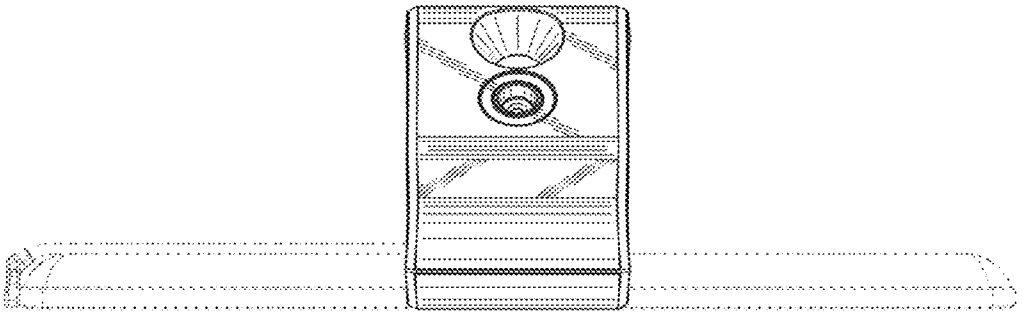

FIG. 6

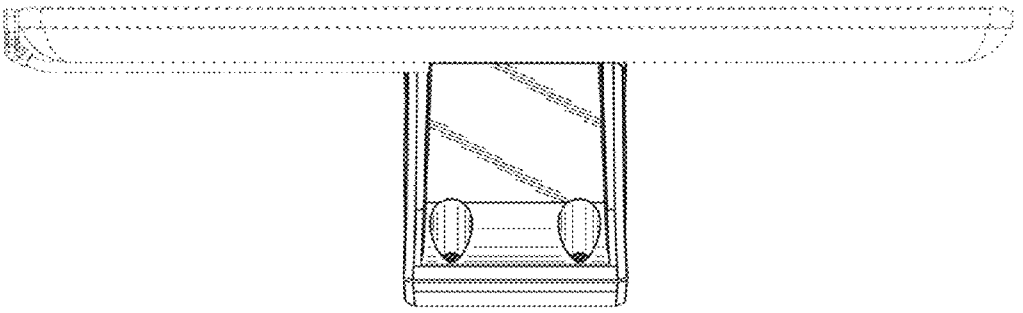

FIG. 7

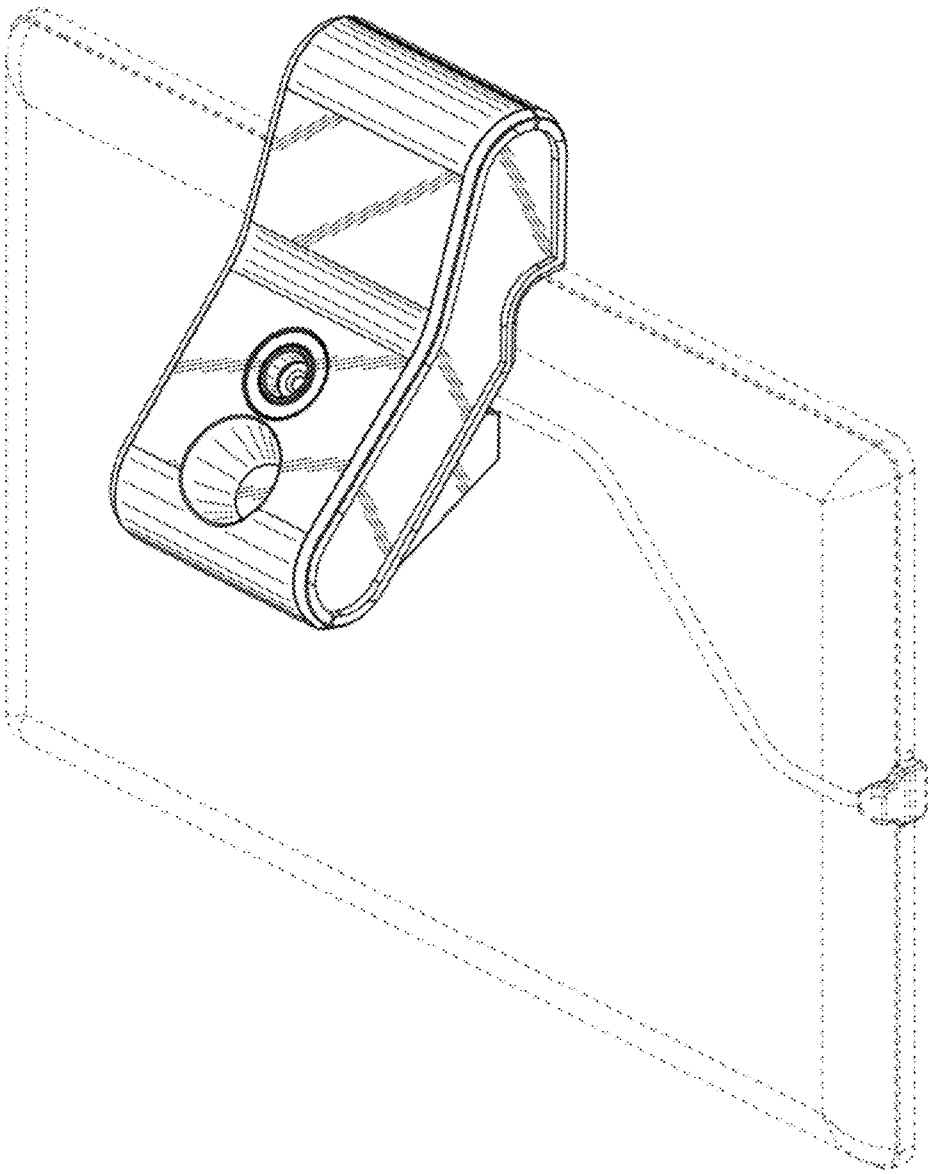

FIG. 8