Oct. 13, 1964 F. G. PENSAVECCHIA ET AL 3,152,540

HAMMER MECHANISM

Filed Sept. 18, 1961 3 Sheets-Sheet 1

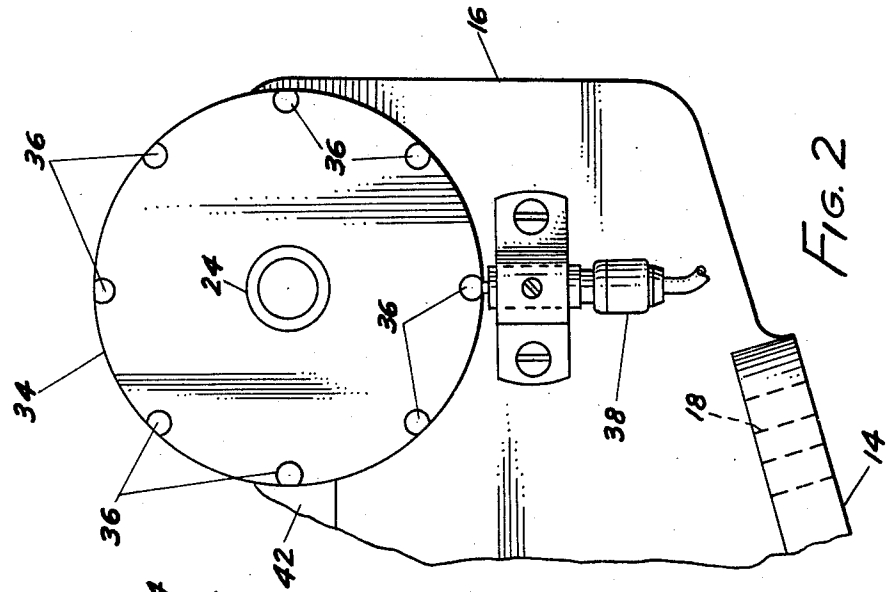

FIG. 2

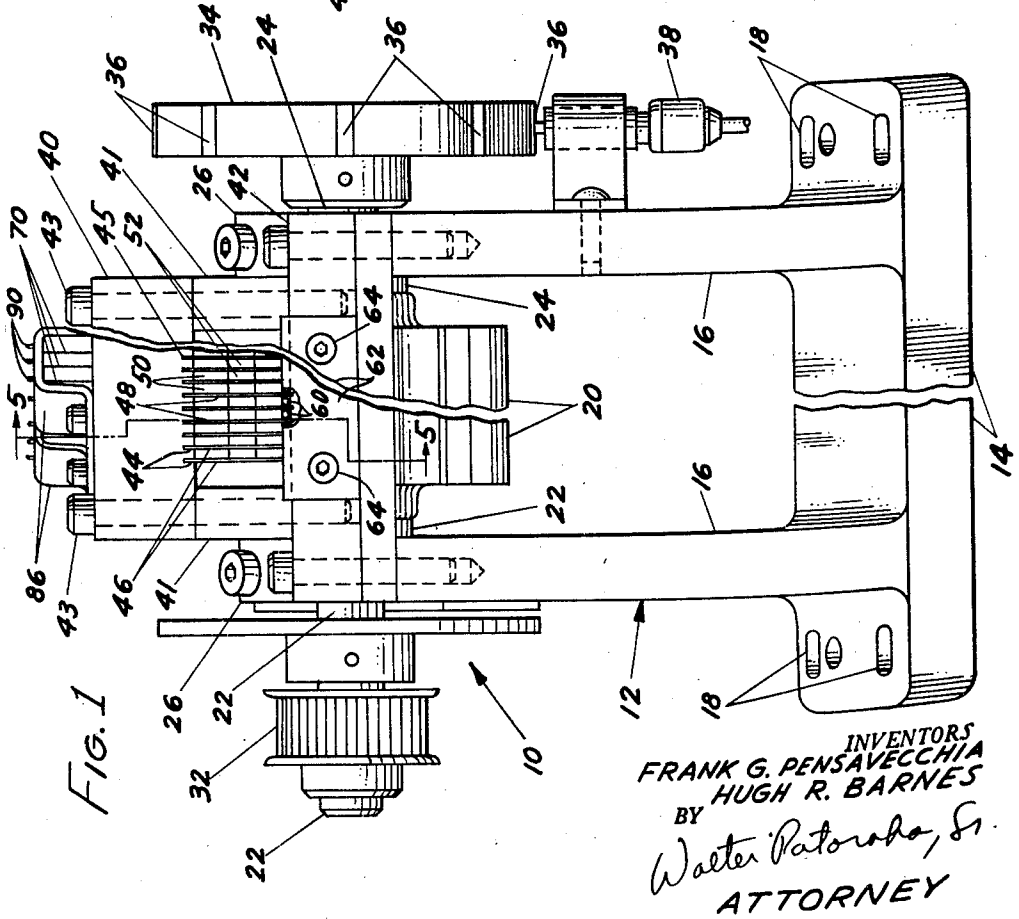

FIG. 1

INVENTORS
FRANK G. PENSAVECCHIA
HUGH R. BARNES
BY
Walter Patorska, Sr.
ATTORNEY

Oct. 13, 1964 F. G. PENSAVECCHIA ET AL 3,152,540

HAMMER MECHANISM

Filed Sept. 18, 1961 3 Sheets-Sheet 2

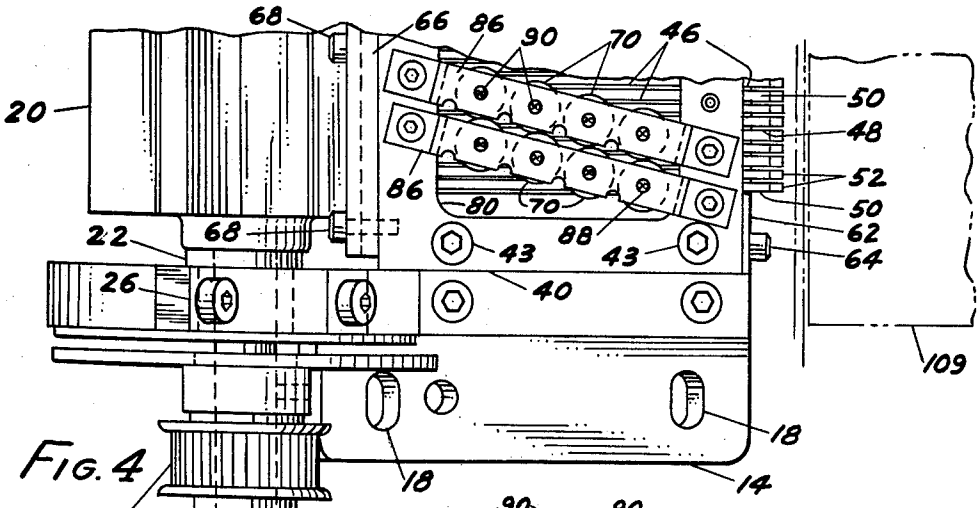

FIG. 4

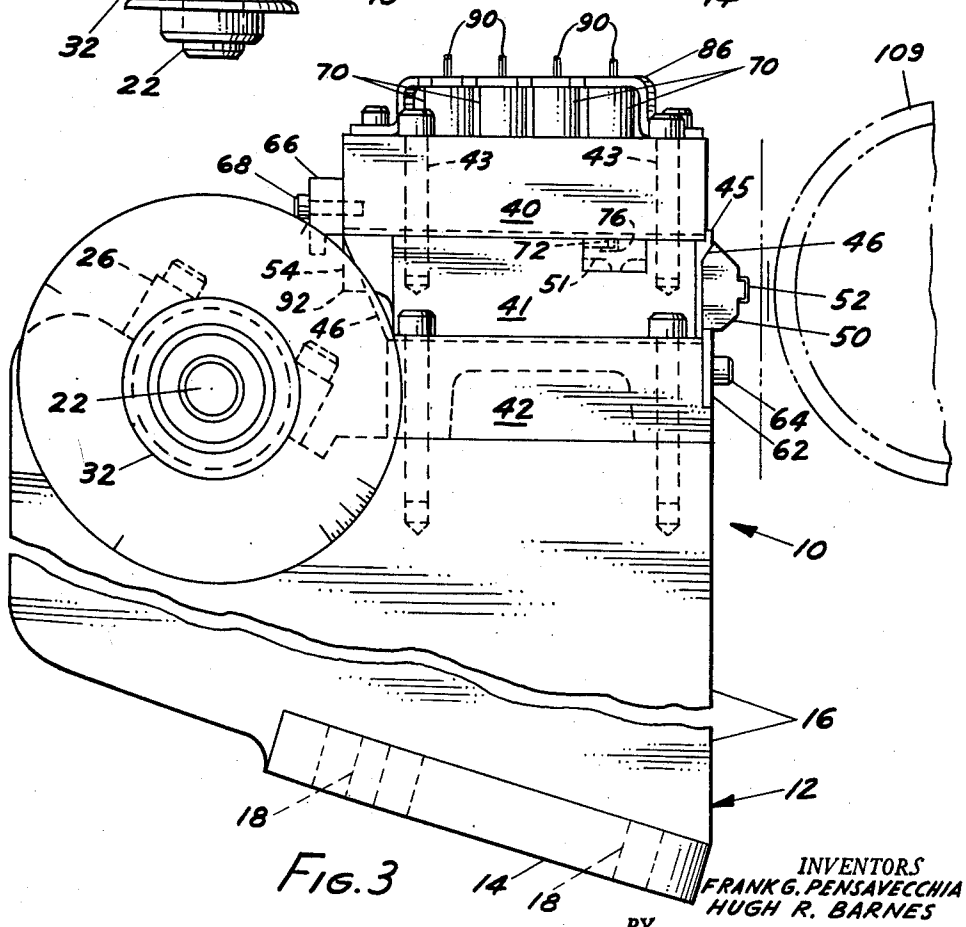

FIG. 3

INVENTORS
FRANK G. PENSAVECCHIA
HUGH R. BARNES

BY
Walter Patorska, Jr.
ATTORNEY

Oct. 13, 1964 F. G. PENSAVECCHIA ET AL 3,152,540

HAMMER MECHANISM

Filed Sept. 18, 1961 3 Sheets-Sheet 3

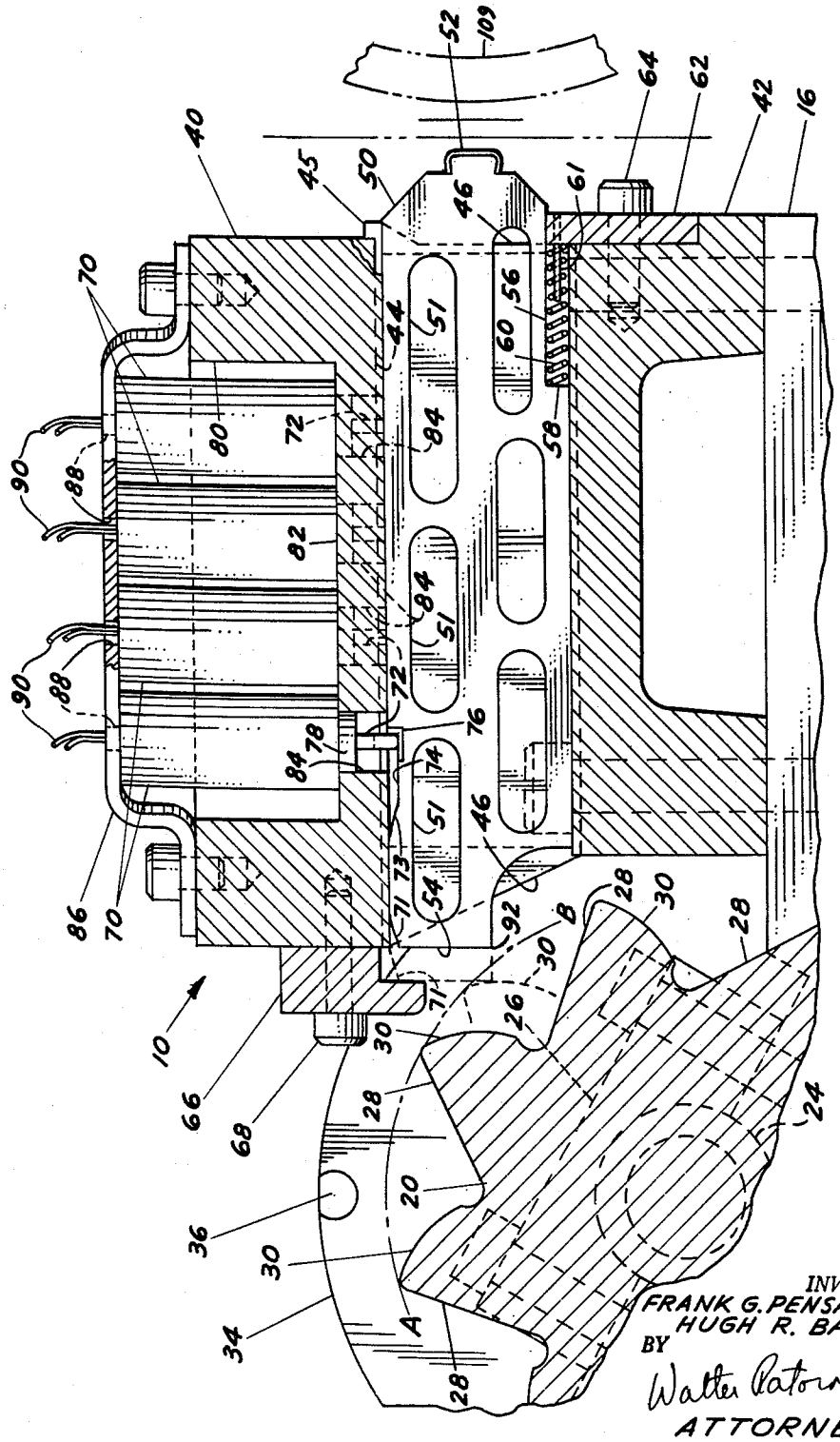

FIG. 5

INVENTORS
FRANK G. PENSAVECCHIA
HUGH R. BARNES
BY
Walter Patorno, Jr.
ATTORNEY

United States Patent Office 3,152,540 Patented Oct. 13, 1964

3,152,540

HAMMER MECHANISM

Frank G. Pensavecchia, Orchard Lake, and Hugh R. Barnes, St. Clair Shores, Mich., assignors, by mesne assignments, to Holley Computer Products Company, Warren, Mich., a corporation of Michigan

Filed Sept. 18, 1961, Ser. No. 138,910
8 Claims. (Cl. 101—93)

This invention relates to an electro-mechincal printer, and particularly to a novel "on-the-fly" type printer.

More specifically, this invention relates to an improvement in the printer hammer mechanism disclosed in U.S. application Serial No. 138,157 entited High Speed Printer and filed on September 14, 1961 in the names of Arvin D. McGregor and James M. Irvine, Jr.

The printer disclosed in the above referenced application Serial No. 138,157, hereinafter referred to as the prior construction, contains a row of print hammers **160** guided for reciprocating movement toward and away from the print drum **109**, each hammer having associated therewith an interposer system including an actuating lever **215** and a so-called beaver tail **182** which is positioned so as to be struck by a lobe **241** of the continuously rotating cam **108** when the actuating lever is not retained in the non-print position by an electromagnet **226**.

The prior construction, including its operation and control, is completely described in the above mentioned application Serial No. 138,157, the disclosure of which is incorporated herein by reference to any extent that it may be necessary to complete this disclosure. Thus, except for occasional reference thereto, the above prior construction will not be described further in any great detail except to say that it involved a number of moving parts for each hammer and a bail bar **243**, the bail bar being provided to prevent a possible meaningless line of print when the printer was first turned on.

It is now proposed to provide a print hammer mechanism in which there is but one moving part in addition to the print hammer itself and the print cam.

Another object of the invention is to provide a mechanical amplifier type of print hammer mechanism in which a print cam is employed, but which does not include a lever type interposer system so that the print cam strikes the print hammer directly.

Another object of the invention is to provide a print hammer mechanism in which the print hammer is retained in the non-print position away from the cam by means of a spring-loaded solenoid plunger engaging a shoulder on the print hammer, the print hammer being spring urged to the print position upon energizing the solenoid associated with the print hammer.

Another object of the invention is to provide a hammer mechanism in which a rotating cam impacts a free-flight, projectile type hammer when it is moved by spring means from a non-print position outside the outer diameter of the cam to a print position within the outer diameter of the cam, but wherein the non-print position of the hammer is a sufficient distance outside the outer diameter of the cam so that the hammer has a running start and thus a greater velocity during its movement from the outer diameter to the print position.

Another object of the invention is to provide a print hammer mechanism in which all hammers addressed for printing at the same time are uniformly positioned against a single stop member.

A further object of the invention is to provide a hammer bank assembly that may be substituted for the hammer bank assembly shown in FIGURE 7 of the above referenced application Serial No. 138,157.

Another object of the invention is to provide a hammer bank assembly that is easier to construct and repair than the hammer bank assembly shown in FIGURE 7 of the above referenced application Serial No. 138,157.

A still further object of the invention is to provide a print hammer mechanism that is simpler in operation, less expensive to construct, less likely to require service and easier to repair than the hammer mechanism disclosed in application Serial No. 138,157.

These and other objects and advantages of the invention will become more apparent upon reference to the following specification and the attached drawings wherein:

FIGURE 1 is an elevational view, with portions thereof cut away, of a print hammer bank assembly embodying the invention.

FIGURE 2 is a fragmentary end elevational view of the hammer assembly shown in FIGURE 1, when viewed from the right-hand end of FIGURE 1.

FIGURE 3 is an end elevational view looking at the left end of FIGURE 1.

FIGURE 4 is a fragmentary top plan view of the left portion of the assembly shown in FIGURE 1.

FIGURE 5 is an enlarged, fragmentary cross-sectional view taken on the plane of line 5—5 of FIGURE 1 and looking in the direction of the arrows.

Referring to the drawings in greater detail, a hammer bank assembly **10** embodying the invention comprises a main casting or support member **12** having a base portion **14** and spaced end portions **16**. As in the prior construction, the base portion is provided with slots **18** so as to enable adjustment of the main support **12** in securing the same to the main frame of the printer.

A multiple lobe print cam **20** is mounted between the end portions **16**, with the cam shaft ends **22** and **24** being mounted in suitable bearings and secured by means of the cap members **26**. The cam lobes **28** are preferably formed with circle involute profiles **30**, and the cam is driven at a constant predtermined speed, in the same manner and for the same purpose as in the prior construction.

A cam drive pulley **32** is mounted on the shaft end **22**, and a timing wheel **34** is mounted on the opposite shaft end **24** so as to be rotatable with the cam. The timing wheel **34** is provided with circumferentially spaced ferro-magnetic segments **36** for cooperation with the magnetic pickup **38** so as to signal the position of the lobes **28** of the cam, all in the same manner as explained in the prior construction.

Upper and lower print hammer guide members **40** and **42**, respectively, are mounted on the end portions **16** so as to extend therebetween. The spacing between members **40** and **42** is determined by the end members **41**, which are secured by the same bolts **43** that secure the upper guide **40**. Like the prior construction, the upper and lower guide members **40** and **42** are provided with vertically aligned slots **44**, each pair of vertically aligned slots having a plate **46** inserted therein so as to provide a series of adjacent spaces **48** in which the individual print hammers **50** are positioned and through which the print hammers are actuated toward and away from the print drum **109**. It will be noted that the plates **46** are retained in one direction by a tab **45** thereon engaging the upper guide member **40** and in the opposite direction by the hammer **62** engaging the edges thereof. Removal of member **62** permits easy removal of any plate **46**, hammer **50** or hammer spring **60**. A spring guide pin **61** for each spring **60** is formed or mounted on the member **62** in order to facilitate assembly and disassembly of hammer bank.

The print hammers **50**, the number of which corresponds to the number of characters in the rows of characters formed on the drum **109** are identical to each other

in construction. Essentially, these print hammers comprise a generally rectangular body preferably formed from a material that is strong, light in weight, resilient and self-lubricating and that has a known and suitable fatigue limit. Delrin is such a material, and the hammers are preferably injection molded from this material in a single cavity mold so as to assure that the hammers are substantially identical in configuration and weight. The hammers are preferably formed with openings 51 and/or reductions in cross-section to further reduce the weight thereof, and each hammer has formed on or secured thereto at one end thereof a relatively hard character-impacting surface or member 52.

The adjacent surfaces of the upper and lower guide members are parallel, and they are positioned such that the lines of action of the print hammers guided thereby pass through the axis of the print drum. The opposite end of each print hammer is formed with a flat surface 54 that is preferably normal to the above line of action of the print hammer.

Each print hammer is formed near the character impacting end thereof with a cut out portion 56 providing an abutment 58 for one end of the spring 60, the other end of the spring being seated against the retainer bar 62 that extends along the entire length of the lower guide member 42 and that is secured thereto by any means such as the screws 64. In other words, each of the print hammers 50 positioned in a space 48 has associated therewith a spring 60 compressed between the shoulder 58 on the print hammer and the elongated spring retainer 62. This spring 60 normally urges the print hammer 50 away from the print drum 109 and toward the print cam 20 until the flat surface 54 of the print hammer is in engagement with the elongated stop member 66 secured in any manner, such as by means of the screws 68, to the upper guide member 40. Thus, with only the structure explained thus far, all print hammers 50 in the print hammer bank 10 would be urged by their respective springs 60 to the dotted line position, as shown in FIGURE 5, against the common stop member.

In this dotted line position, the print hammers 50 are in the path of travel of the cam lobes 28, and any print hammer 50 so positioned would be impacted with a constant velocity along the line of action of the print hammer against the force of the return spring 60. The constant velocity and direction is assured by the involute profile 30 of the cam lobes 28 striking the flat surfaces 54 which are normal to the lines of action of the print hammers, as explained in connection with FIGURE 16 of the above referenced application Serial No. 138,157.

The print drum 109 has axial rows of identical characters formed thereon, the characters of each row usually being different from those in another row, and there are the same number of print hammers 50 in the bank 10 as there are characters in a row of characters formed on the drum 109. However, it is desired to print only certain preselected characters from any row of characters on any line of print, depending upon information and signals supplied by the computer with which the printer is employed.

The immediate means for addressing the individual print hammers 50—that is, placing any given print hammer 50 in the dotted line print position—comprises a solenoid 70 associated with each print hammer. These solenoids may be ordinary solenoids having a movable core or plunger 72 urged away from the solenoid body by a spring when the solenoid coil is not energized and drawn into the solenoid body when the solenoid coil is energized.

Each print hammer 50 is formed along one edge thereof with a cut out portion or slot 74 adapted to receive the extended plunger 72 of its associated solenoid when the solenoid 70 is in the unenergized state. An insert 76 secured at the end of the slot 74 provides an abutment to engage the extended plunger 72 and retain the hammers 50 in the non-print position shown in solid lines in FIGURE 5 against the force of the return spring 60 tending to move the hammer to the dotted line print position. A hammer will remain in this non-print position until a suitable signal (equivalent to the pulse coil energizing signal of the prior construction) results in the solenoid 70 being energized to withdraw the plunger 72 from the slot 74 and permit the return spring 60 to move the hammer rearwardly against the stop 66.

While it is not necessary to the operation of the hammer, the upper edge of the hammer is formed with camming ramps 71 and 73 to enable insertion and removal of the hammer without removing or energizing its solenoid 70.

It is apparent that the spacing of the hammers 50 is determined by the spacing of the characters in the row of characters formed on the print drum and that there must be a separate solenoid for each print hammer. Inasmuch as the diameter of the solenoids is greater than the width of a print hammer, the solenoids are preferably mounted in slanted groups, as best seen in FIGURE 4.

Each solenoid 70 comprises a main body with a reduced cylindrical or other end portion 78, the movable plunger 72 being biased outwardly by the usual spring provided inside each solenoid body.

The upper guide member 40 may be formed with a recess 80 extending along the entire bank of hammers and being sufficiently wide to receive a group of solenoids 70, four solenoids being shown in this particular embodiment. The bottom wall of the recess 80 is formed with similarly grouped annular passages 84, the axis of each passage passing through the central plane of its associated hammer 50. Each solenoid 70 is then placed in the recess 80 so that the reduced portion 78 thereof fits into one of the passages 84, and a holding bracket 86 is secured to the upper guide member 40 in a manner to hold one group of the solenoids 70. In this case, four solenoids 70 are held by a single bracket 86, which may have openings 88 to receive the solenoid leads 90; it is apparent, however, that some other solenoid grouping and that some other securing means could be employed.

Operation

The hammer bank 10 would be secured on the main frame of the prior printer with the character impacting ends 52 of the row of hammers being positioned adjacent the print drum, as shown in FIGURE 3 and in the manner of the prior construction.

In general, the print drum and the cam may be the same or similar to those of the prior construction, and they would be driven in the same manner as shown in FIGURE 5 of the above referenced application. The timing wheel and the magnetic pickup associated therewith may also be the same in construction, operation and purpose as in the prior construction. The energization of the individual hammer solenoids 70 would be accomplished in essentially the same manner as the energization of the pulse coils of the prior construction, any differences in magnitude and duration of pulses being a matter of design.

It is thus apparent that the improved hammer mechanism described herein does not require either the holding coils and associated circuitry or the bail bar of the prior construction.

Except when actually printing, the print hammers 50 are retained in the solid line non-print position of FIGURE 5 by the spring-biased solenoid plunger 72 engaging the shoulder 76 on the print hammer. Energization of any given hammer solenoid 70 for printing may be of such short duration that the plunger 72 is already extended by its spring before the hammer 50 has been impacted by the cam 20; in that event, the again extended plunger 72 will ride along the top edge of the hammer 50 during its final travel to the stop 66 and immediately after impact until the abutment 76 passes the plunger 72,

at which time the plunger will extend itself further into the slot, just as it is in the non-print condition. Thus, the plunger 72 will be in the slot 74, which is sufficiently long so as not to interfere with the travel of the hammers 50 on impact, even before the impacted hammer reaches the print drum. In other words, the plunger 72 is already waiting for the shoulder 76 to engage it and maintain the hammer 50 in the solid line non-print position until the next time that particular solenoid is energized.

Assuming that the printer has been in operation for some given time, the very last signal received from the computer to print certain characters and complete a line of print will necessarily and automatically result in the hammers involved being impacted and returned to the non-print position immediately thereafter. Since the operator does not normally shut off the printer until after a printing job has been completed, all of the hammers of the printer will already be in the non-print position when the printer is shut down.

It is thus apparent that the construction of this invention eliminates the need for the bail bar, the interposer lever system, and the hammer electromagnets of the prior construction disclosed in application Serial No. 138,157. Since all of the print hammers are in their non-print position on shut down of the printer and remain in that condition until the printer is again turned on and a new print signal is given to energize one or more of the hammer solenoids 70, there is no possibility of a meaningless line of print when the printer is turned on because the cam lobes cannot strike a hammer even though the cam is rotating.

No printing can occur until a proper signal is received from the computer to energize one or more of the hammer solenoids 70, at which time the solenoid plunger 72 is drawn into the solenoid body and away from the shoulder 76 of the print hammers 50 and the return spring 60 moves the hammer away from the print drum and against the stop 66. All print hammers thus addressed for printing from a single row of characters on the print drum will be struck simultaneously by the involute profile surface 30 of one of the cam lobes 28. Regardless of any possible variation of the print hammers along their lines of action due possibly to variations in the surface of the stop member 66, the involute profile cam lobe 28 will strike all addressed print hammers toward the print drum with a constant velocity and direction, as explained in connection with the prior construction. These impacted hammers will be returned by the force of the return spring 60 and stop in a non-print position due to the re-extended solenoid plunger 72.

Before the next succeeding cam lobe reaches the dotted line position of FIGURE 5, all hammers required to print from the next succeeding row of characters formed on the print drum will have been addressed by energization of their respective solenoids and reached the dotted line position of FIGURE 5 against the stop 66, waiting to be impacted by the next succeeding cam lobe.

It is important in the operation of the hammer mechanism of this invention, and in the design of the printer generally, that the friction of the hammer 50 against the solenoid plunger 72 be maintained at a minimum. This, of course, enables the use of a physically smaller and lower power solenoid. It is also important that the hammer move from the outer diameter AB of the cam 20 to its dotted line print position as fast as possible so as to require less rotation of the cam than would otherwise be necessary for this same hammer motion and thus provide a greater safety factor in the operation of the mechanism in view of variables such as hammer friction, hammer spring rate and pre-load and solenoid actuation time.

It is obvious that the corner 92 of the hammer, when it is in the solid line non-print position, must be outside the outer diameter AB of the cam lobes in order that the lobes of the rotating cam will not strike the hammer. This could be accomplished by positioning the corner 92

of the hammer very close to this outer diameter so that the lobes just miss the hammer. However, it has been found that the operation of the mechanism is greatly improved, all other things being equal, if the corner 92 of the hammer is stopped some greater distance away from the outer diameter. This greater clearance, in effect, gives the hammer a running start so that its velocity from the time it reaches the outer diameter AB of the cam to the time that it reaches the stop 66 is greater than it would be if its initial stopped position were very close to the outer diameter of the cam. This permits the use of a lower rate spring and/or a lower pre-load of the spring, thus reducing the side thrust or friction of the hammer against the solenoid plunger. Reducing this friction reduces the power required to be supplied to the solenoid. The greater clearance permits the hammer to reach a stable stopped position sooner, which results in a better impact of the hammer by the cam.

As explained in application Serial No. 138,157 referred to above, a code disk assembly secured for rotation with the print drum signals what row of characters on the drum is approaching the print station so that those characters could be printed. The timing wheel and magnetic pickup provide a signal to indicate when a cam lobe is approaching a position to impact addressed hammers. These signals are processed by the computer-printer electronics and finally result in a signal to the printer telling it which hammer solenoids must be energized so that their associated hammers may print by impact from the next cam lobe.

It is apparent from the above description that a simpler operating and less expensive hammer mechanism has been provided by the use of the invention. This hammer mechanism is easily assembled in a hammer bank assembly that can be substituted for the hammer bank assembly of the prior construction. The same type of signals that energized the pulse coils of the prior construction could be used to energize the solenoids 70 of the present construction. Any changes in the circuitry of the prior construction necessitated by the substitution therein of a hammer bank assembly embodying this invention are minor and deemed to be a matter of ordinary skill. For example, no holding coil circuitry is required; also as stated above, the prior bail bar construction may be entirely eliminated.

While but one embodiment of the invention has been shown and described, it is apparent that modifications can be made within the scope of the appended claims.

What we claim as our invention is:

1. In a printer having a continuously rotated drum with rows of characters formed thereon, a row of print hammers positioned adjacent said print drum, a single continuously rotated impact means positioned on the side of said row of print hammers opposite said print drum, each of said print hammers comprising a body mounted for reciprocating movement toward and away from said print drum upon being struck by said impact means, the line of action of each of said hammers passing through the center of said print drum, a compression spring positioned between a fixed abutment and a shoulder formed on each of said hammers, said spring urging said print hammer away from said print drum and into the path of said impact means, a fixed stop member limiting the movement of each of said hammers away from said print drum by said spring and defining a common position for striking said hammers by said impact means, means for retaining each of said hammers in an intermediate position away from said fixed stop but with its extreme end out of the path of said impact means, said means comprising an abutment formed on one edge of each of said hammers and a solenoid-operated latch engaged by said abutment.

2. A hammer bank assembly for a high speed printer having a print drum with axial rows of identical characters formed thereon, said assembly comprising a main

support member having spaced end supports, an elongated multiple lobe cam mounted on said end supports so as to be rotatable therein, means for driving said cam, means for signaling the position of the lobes of said cam during the rotation thereof, upper and lower guide members mounted on said side supports in parallel spaced relation, said guide members having vertically aligned slots formed therein, a spacer plate positioned in each pair of vertically aligned slots so as to provide the same number of guide spaces as there are characters in a row of characters formed on the drum, a print hammer positioned in each of said guide spaces, a single elongated hammer stop member secured to the end of said upper guide member adjacent said cam, an elongated abutment member secured to the end of said lower guide member adjacent said print drum, a compression spring positioned in each of said guide spaces between said abutment member and a shoulder formed on the print hammer positioned therein, said spring urging said hammer into the path of said cam and toward said stop, means associated with each of said print hammers for preventing said print hammers from being impacted by said cam, said means comprising an abutment formed on the upper edge of said print hammer and a movable latch, said latch being urged into engagement with said abutment by a spring and drawn out of engagement with said abutment by a solenoid, said solenoids being positioned and secured in said upper guide member.

3. In a printer having a rotatable print drum and a print hammer impact means, a print hammer system mounted intermediate said drum and said impact means, said impact means at times projecting said print hammer system toward said print drum, said system comprising a slidably mounted print hammer, a fixed stop at each end of said print hammer, one of said stops limiting the movement of said hammer toward said impact means, a cut out portion near each end of said hammer, a compression spring in said cut out portion at the drum end of said hammer and retained therein by one of said fixed stops, said spring returning said hammer to said one of said stops, a solenoid fixedly mounted adjacent to and within the longitudinal limits of said hammer, and a moveable latch at times extending from said solenoid into said cut out portion at the other end of said hammer.

4. In a printer having a rotating print drum, a projectile type print hammer, first means for at times impacting said print hammer, second means for urging said print hammer into the path of said first means, third means for at times contacting and thereby preventing said second means from positioning said hammer in the path of said first means, and sloped camming ramps formed on said print hammer between said third means and the impact end of said print hammer for permitting insertion and removal of said print hammer without removing or energizing said third means, said third means riding on a surface on said print hammer and being alternately lifted and lowered by said camming ramps during the insertion and removal of said print hammer.

5. In a printer having a rotating print drum, a projectile type print hammer, a rotating element for at times impacting said print hammer, spring means for urging said print hammer into the path of said element, solenoid means having a spring-biased latch extending therefrom into a slot formed on said hammer for preventing said first means from positioning said hammer in the path of said element, and sloped two-way camming ramps formed on the impact end of said print hammer for during the insertion and removal by said print hammer. without removing or energizing said solenoid means, said latch riding on a surface on said print hammer and being alternately lifted and lowered by said camming ramps during the insertion and removal of said print hammer.

6. A printer, comprising a print drum, a support member, a row of print hammers mounted in said support member and an elongated rotatable cam for impacting said print hammers toward said drum, each of said hammers comprising a body having length, width and thickness and being reciprocable through a slot formed in a support member, each of said hammers being urged toward said cam by a compression coil spring positioned in a slot formed in the print drum end of said hammer and confined within said slot through which said hammer reciprocates, one edge of each of said print hammers having a slot adapted to receive a spring-loaded and solenoid-operated latch so as to prevent said first spring from positioning said print hammer in the path of said cam except when said solenoid is energized, the upper edge of each of said print hammers between said latch-receiving slot and the cam end thereof having front and rear cam surfaces enabling the insertion and removal of said print hammer through said slot from the drum end of said support member without removing said latch or energizing said solenoid, said latch riding on a surface on said print hammer and being alternately lifted and lowered by said cam surfaces during the insertion and removal of said print hammer.

7. In a printer having a base member, a rotatable print drum, an impact means, a print hammer, means on said base for guiding said hammer, said hammer having a longitudinally extending recess at that end of the hammer nearest said drum, said recess being formed with an abutment spaced from said end, a compression spring mounted in said recess, the width of said spring being substantially equal to the width of said hammer, spring retaining means on said base, said spring being confined by said retaining means and said abutment and urging said hammer toward said impact means, said hammer having a second abutment, a latch positioned between said drum and said impact means normally engaging said second abutment to hold said hammer away from said impact means against the force of said spring, and solenoid means for withdrawing said latch from engagement with said hammer.

8. In a printer as defined in claim 7, said second abutment being disposed between the ends of said hammer.

References Cited in the file of this patent

UNITED STATES PATENTS

2,766,686	Fomenko et al.	Oct. 16, 1956
2,792,779	Toeppen et al.	May 21, 1957
2,895,411	Demer et al.	July 21, 1959
2,897,752	Malmros et al.	Aug. 4, 1959
2,949,846	Hoffman et al.	Aug. 23, 1960
2,997,632	Shepard	Aug. 22, 1961