March 8, 1938. E. GERLACH 2,110,763

MICROPHONE

Filed March 14, 1936

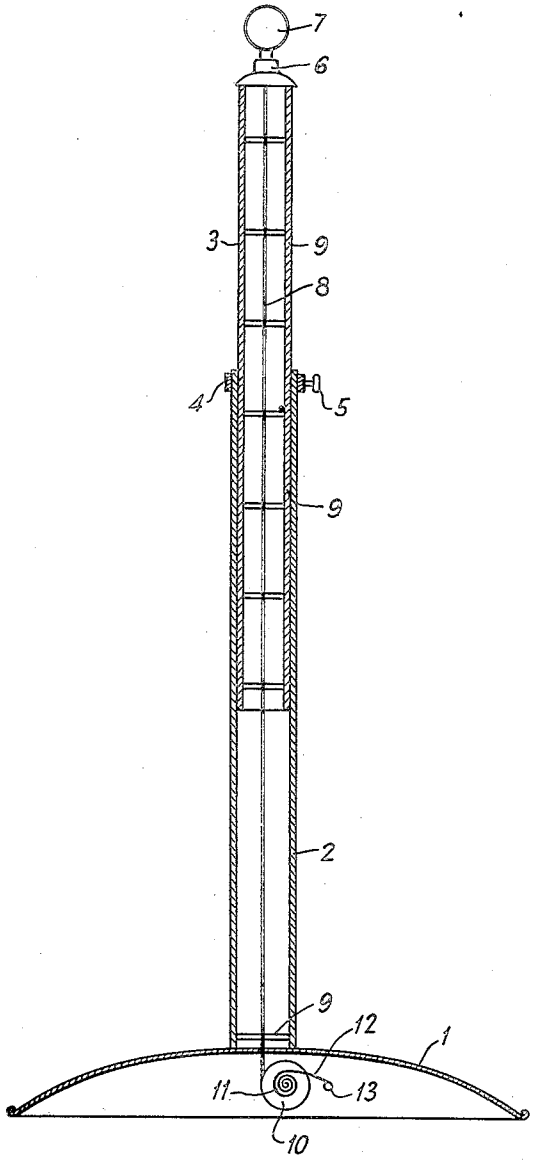

INVENTOR
ERWIN GERLACH
BY W. L. Grover
ATTORNEY

Patented Mar. 8, 1938

2,110,763

UNITED STATES PATENT OFFICE

2,110,763

MICROPHONE

Erwin Gerlach, Berlin, Germany, assignor to Telefunken Gesellschaft für Drahtlose Telegraphie m. b. H., Berlin, Germany, a corporation of Germany

Application March 14, 1936, Serial No. 68,788
In Germany March 14, 1935

6 Claims. (Cl. 179—148)

This invention relates to an improved microphone upright or support.

In condenser microphones with an upright or support capable of adjustment in level or height, the amplifier, as a rule, is mounted at close proximity to the microphone in order that the connection between the latter and the amplifier may be as short as possible. In fact, one preferred scheme is to secure the amplifier directly on the upright or support below the microphone.

The cable brought away from the amplifier, in one of the forms of construction disclosed in the earlier art, is disposed on the outside of the upright. It thus produces always a lateral pull upon the upright or support, and this tends to make the latter less stable and steady.

It is also known in this form of construction to accommodate leads interiorly of the upright. When adjusting the height of the upright, the cable must be shifted out or in at the bottom end of the upright. The leads are thus subject to a good deal of wear and tear, in fact, they chafe and wear fast. Also in types of upright in which the leads are fixed at the bottom end, and in which the wire in the upright is coiled or kinked irregularly, trouble is often encountered for the reason that the leads are markedly bent and wear quickly at the kinks.

All of these constructions in which the amplifier is disposed directly underneath the microphone and secured on the upright, involve an additional drawback which inheres in the very type thereof: The acoustic field about the microphone is seriously disturbed by the amplifier.

Now according to the present invention such difficulties and drawbacks in reference to the acoustic field as are found in extensible types of uprights for condenser or electrostatic microphones known in the prior art are cured by that the upright or support consists of telescoping tubes which at the same time constitute an electrical lead for the microphone. The other supply lead is accommodated inside, and insulated from, the tubular support or upright by means of spacer pieces and thus connected to the microphone; it is formed so as to be reeled or wound up.

This inside conductor consists of a wire of comparatively small diameter. The distance between the outer and the inner conductor must be chosen in such a way that a cable of the lowest possible capacitance results. Changes in the cable capacity values of the leads, when the height of the upright is altered, are practically unnoticed in reference to the sensitivity or in the frequency response, for the reason that the conductor capacity has a very small value. The acoustic field around the microphone is only slightly distorted.

The inner conductor is attached at the top of the upright. At the bottom or base end it is placed on a roller, pulley, or the like, made from insulation material. This pulley should involve a minimum amount of capacitance, in order that no spurious capacitive actions may arise. When the upright is extended, the wire will unwind from the pulley or spool. At the same time a spring engaging the said spool or pulley and which may act as a current supply lead becomes tensioned. But if the upright is telescoped together, the spring will become slack and the spool is pulled by it in the opposite direction so that the wire will be wound up.

One exemplified embodiment of the invention is shown in the annexed drawing. Upon the base piece 1 is mounted a tubular upright 2. Shiftably disposed inside tube 2 is the tube 3, and it may be locked in the desired position by the aid of a ring 4 and a screw 5. On one of the tubular leads is arranged conveniently a slide contact in order that a good electrical connection may all the time be insured between the extensible or telescoping tubes when the height of the upright is adjusted. In lieu of the ring and screw for locking and retaining the device in the desired and adjusted position, there could be used also a cap screw. The end of the tube where the cap screw is engaged, is split more or less deeply at a number of places. This part of the tube will then yieldingly engage around the other tube, and will assure good electrical union also when loosening the cap screw.

On top of the tube 3, in a ball and socket joint 6 is fitted the condenser microphone 7 in a way so as to be capable of being easily turned in all directions and being thus adjustable. In the center of the upright the lead or conductor 8 is disposed upon spacer pieces 9. These spacer pieces 9, if desired, may be coated with a thin coat of paraffin. The latter is heated to temperatures over 100 degrees C., and the spacers are immersed in the liquefied paraffin for a while. By this treatment the insulation power of the spacers is essentially increased, particularly if the microphone standard is to be used for outdoor work. In order that the paraffin may be made to stick firmly upon the surface, the latter preferably is provided with flutes or grooves or is roughened or granulated in some other manner.

The wire 8 is wound upon a pulley or spool 10 accommodated in the bottom end 1 of the up-

right. Engaging the pivot 11 of the spool 10 is the spring 12, which, if necessary, in an insulated manner is secured in the base, say, at the point marked 13. The conductor 8 has one end united with a transmission line or circuit (not shown in the drawing), while the other end is brought to one of the terminals of the condenser microphone. The respective other electrode or terminal of the said condenser microphone is united with the upright 2 and 3, the latter, in turn, being grounded.

In lieu of the spring there could be used also a spring- or weight-loaded pulling device.

The microphone amplifier could be disposed either below and directly on the foot or base 1 of the upright, or else be mounted separately from the upright.

I claim:

1. An adjustable support for a condenser microphone comprising a plurality of metallic tubular members arranged to telescope within each other to provide adjustment in the height of said microphone support, said metallic members serving as one conductor of said microphone circuit, a wire centrally located within said metallic tubular members and serving as the other conductor of said microphone, a base member supporting said tubular members, a pulley of insulating material located within said base member so as to present the lowest possible capacitance in the microphone circuit.

2. An adjustable support for a condenser microphone comprising a plurality of metallic tubular members arranged to telescope within each other to provide adjustment in the height of said microphone support, said metallic members serving as one conductor of said microphone circuit, a wire centrally located within said metallic tubular members and serving as the other conductor of said microphone, and a plurality of insulating spacing members located within at least one of said metallic tubular members for retaining said other conductor concentrically within said tubular members.

3. An adjustable support for a condenser microphone comprising a plurality of metallic tubular members arranged to telescope within each other to provide adjustment in the height of said microphone support, said metallic members serving as one conductor of said microphone circuit, a wire centrally located within said metallic tubular members and serving as the other conductor of said microphone, a plurality of insulating spacing members which are paraffin coated located within at least one of said metallic tubular members for retaining said other conductor concentrically within said tubular members.

4. An adjustable support for a condenser microphone comprising a plurality of metallic tubular members arranged to telescope within each other to provide adjustment in the height of said microphone support, at least one of said tubular members split to provide a yieldingly engaging slide contact, said metallic members serving as one conductor of said microphone circuit, a wire centrally located within said tubular members and serving as the other conductor of said microphone, a base member supporting said tubular members, and a pulley of insulating material located within said base member so as to present the lowest possible capacitance in the microphone circuit.

5. An adjustable support for a condenser microphone comprising a plurality of metallic tubular members arranged to telescope within each other to provide adjustment in the height of said microphone support, at least one of said tubular members having a clamping device to retain said metallic members in a fixed position, said metallic members serving as one conductor of said microphone circuit, a wire centrally located within said tubular members and serving as the other conductor of said microphone, a base member supporting said tubular members, and a pulley of insulating material located within said base member so as to present the lowest possible capacitance in the microphone circuit.

6. An adjustable support for a condenser microphone comprising a plurality of metallic tubular members arranged to telescope within each other to provide adjustment in the height of said microphone support, a ball and socket joint located at the top end of one of said tubular members for adjustably securing said microphone to said support, said metallic members serving as one conductor of said microphone circuit, a wire centrally located within said metallic tubular members and serving as the other conductor of said microphone, a base member supporting said tubular members, and a pulley of insulating material located within said base member so as to present the lowest possible capacitance in the microphone circuit.

ERWIN GERLACH.