Dec. 22, 1964 H. L. HARTMAN 3,162,447

PLURAL-SPEED PHONOGRAPH TURNTABLE DRIVE MECHANISMS

Filed April 12, 1961 3 Sheets-Sheet 1

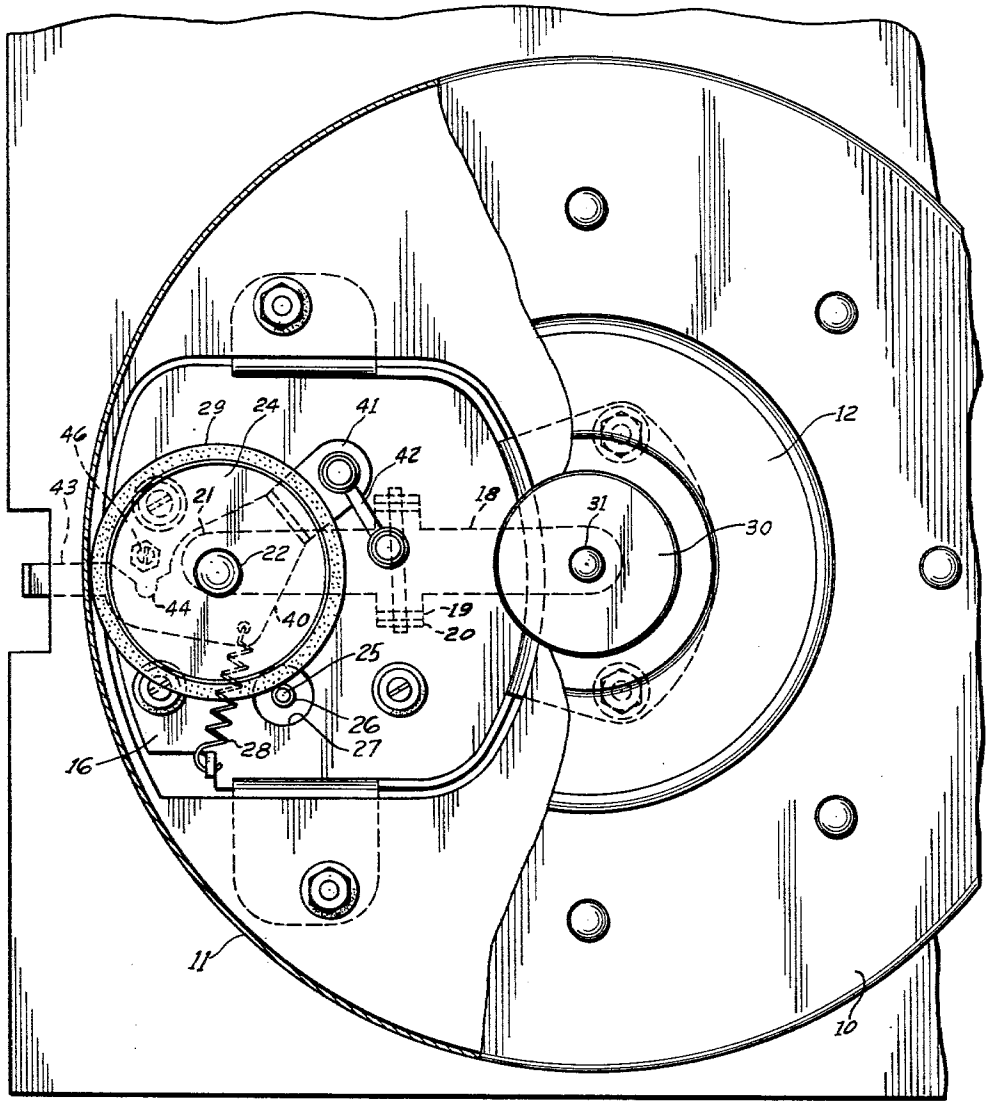

Fig. 1.

INVENTOR.
Herbert L. Hartman
BY
ATTORNEY

Dec. 22, 1964 H. L. HARTMAN 3,162,447

PLURAL-SPEED PHONOGRAPH TURNTABLE DRIVE MECHANISMS

Filed April 12, 1961 3 Sheets-Sheet 2

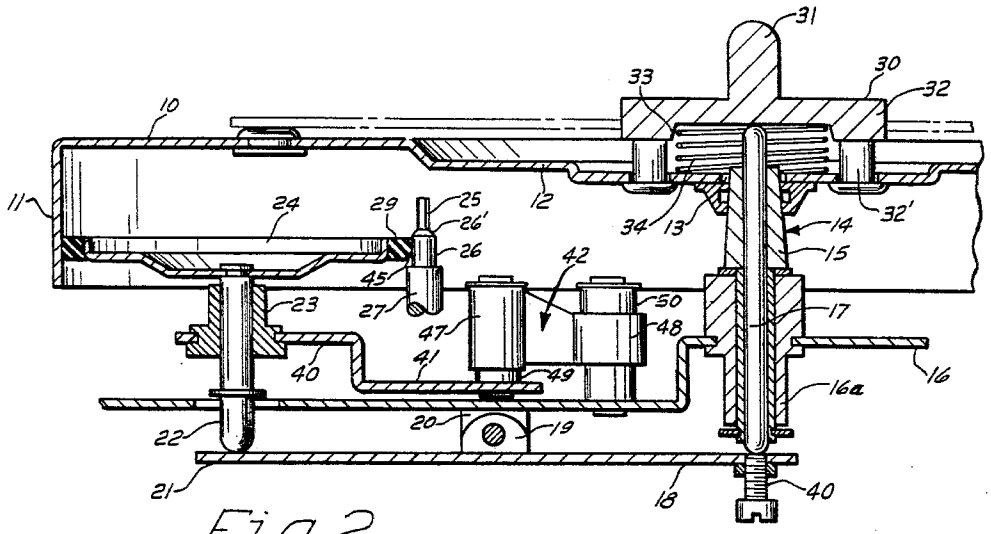

Fig. 2.

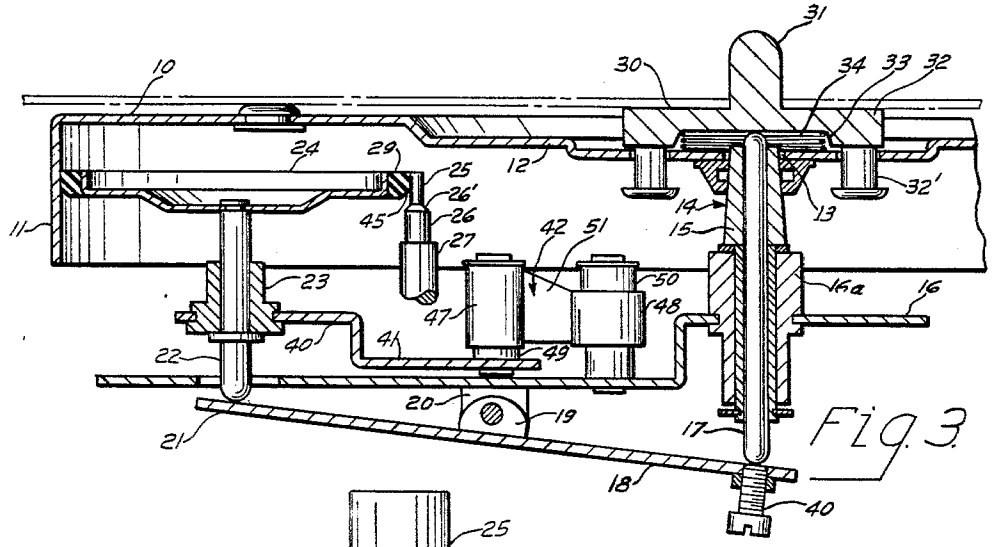

Fig. 3.

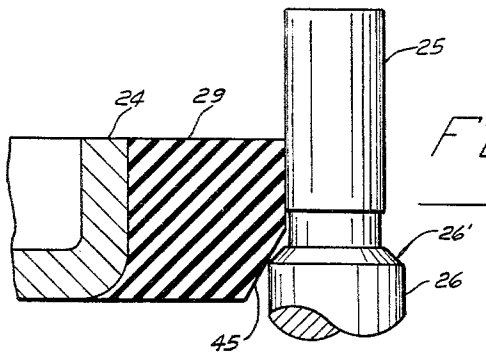

Fig. 5.

INVENTOR.
Herbert L. Hartman
BY
ATTORNEY.

Dec. 22, 1964 H. L. HARTMAN 3,162,447

PLURAL-SPEED PHONOGRAPH TURNTABLE DRIVE MECHANISMS

Filed April 12, 1961 3 Sheets-Sheet 3

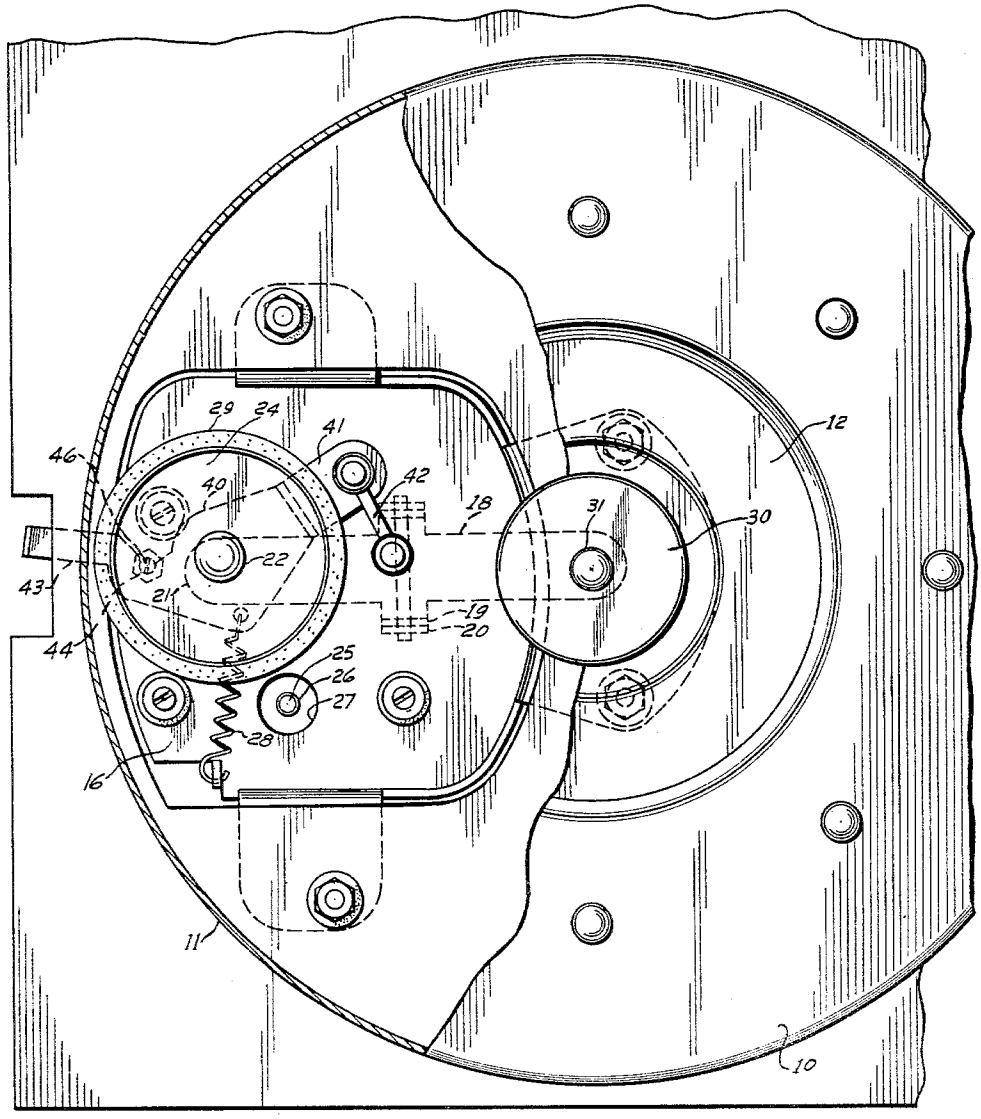

Fig. 4.

INVENTOR.
Herbert L. Hartman
BY
ATTORNEY

United States Patent Office 3,162,447
Patented Dec. 22, 1964

3,162,447

PLURAL-SPEED PHONOGRAPH TURNTABLE DRIVE MECHANISMS

Herbert L. Hartman, Elyria, Ohio, assignor to The General Industries Company, Elyria, Ohio, a corporation of Ohio

Filed Apr. 12, 1961, Ser. No. 102,438
9 Claims. (Cl. 274—9)

My invention relates to plural speed drive mechanisms for phonograph turntables and relates more particularly to improvements in drive mechanisms therefor particularly adapted for driving the turntable at either of preferably two speeds.

An object of my invention is to provide, in a device of the type referred to, a change of driving speed which can be accomplished automatically in one speed change through the medium of the record to be played on the turntable and without the use of manual additional control means for speed shift. A further object is to provide, in a device of the type referred to, means whereby the speed changes are automatically accomplished during rotation of the turntable.

It is a further object of my invention to provide a speed changer for the turntable through means mounted centrally of said turntable.

A still further object of my invention is to provide a change of speed for a turntable through the medium of mounting means for the said records.

Another object of my invention is to provide a simple changer speed mechanism which will be economical to manufacture, being composed of but few parts, and highly efficient in use.

Still other objects of my invention and the invention itself will become apparent from the following description and the appended drawings, in which drawings:

FIGURE 1 is a top plan view of the speed changing mechanism of my invention; a portion of the turntable being broken away to better illustrate the speed changing mechanism and an underlying portion thereof being shown in dotted lines;

FIGURE 2 is a transverse sectional view of the modification of my invention shown in FIGURE 1, showing the mechanism in its playing portion with a record adapted to be driven at 45 r.p.m., indicated as placed on the turntable;

FIGURE 3 is a view similar to that of FIGURE 2 showing the mechanism in playing position with a record placed on the turntable and adapted to be driven at 33 r.p.m.;

FIGURE 4 is a view of the mechanism of FIGURES 1 to 3 showing the parts in an intermediate speed changing or non-play position; and

FIGURE 5 is an enlarged elevational view partly in section showing more clearly the idler tread and rotor shaft assembly.

Referring now more particularly to the drawings, in all of which like parts are designated by like reference characters, at 10 I show a phonograph turntable having a peripheral flange 11. The turntable 10 as shown has a central recess portion 12 which is centrally apertured to afford a spindle opening 13. The spindle 14 comprises a hollow spindle 15 secured to a mounting plate 16 by means of bushing 16*a*, the spindle is being freely rotatable in the bushing 16*a*, and vertically reciprocal rod 17 is telescoped in spindle 15. The lowermost end of the rod 17 rests on a 1st class generally cruciform shape lever 18 having upstanding ears 19 journalled to downwardly extending tab extensions 20 depending from the spindle mounting plate 16. The free end 21 of the lever 18 contacts rod means 22 which is slidably mounted in idler

mount 23 and projects downwardly therefrom, the idler mount being adapted for horizontal displacement with respect to the turntable flange 11 and the different diameter steps 25 and 26 mounted on the rotor shaft 27. Idler mount 23 is biased in a manner well known in the art by spring means 28 into driving engagement with one of the steps of the rotor shaft and a portion of the peripheral flange of the turntable. The idler mount comprises generally a lever 40 having an arm 41 fixedly mounted on post 49 at the bottom thereof. Fixedly mounted on mounting plate 16 is a second post 50. Slidably mounted on the posts 49 and 50 is toggle link 42, which comprises a pair of axially parallel, laterally interspaced, bearing members 47 and 48 connected by web 51. Hence it will be seen that when the lever 40 and the post 49 are shifted horizontally, they will pivot about post 50 due to toggle link 42. The idler mount may have a manually actuable hand lever portion 43, as illustrated, extending beyond the outer periphery of the turntable which is adapted to shift the lever so that a notch 44 disposed at one side of the lever portion 43 is adapted to be swung into locking engagement with a preferably plastic pin 46 secured to the mounting plate and extending upwardly therefrom. The pin 46 shown is bifurcated to permit contraction of the pin and secure compressive seating of the same within the notch when the lever is shifted from the playing position shown in FIGURE 1 to a neutral or non-playing position as shown in FIGURE 4 in which latter position the idler wheel is moved out of engagement with either of the rotor steps and the turntable flange.

As illustrated in FIGURE 2, an adapter 30 is provided, preferably of plastic or like material, comprising a spindle portion 31, a circular skirt portion 32, and securing means such as a lug or plurality of lugs 32 are provided which project through the recessed portion 12 of the turntable. The adapter 30 is provided with a socket 33 on its under face and a compression spring means 34 is provided seated on the socket surface 33 and the upper surfaces of the recessed portion 12. The skirt portion 32 of the adapter 30 is adapted to act as a centering or locating spindle for a record, such as a 45 r.p.m. record, and when so employed, as best illustrated in FIGURE 2, the socket surfaces merely contact the upper surfaces of the rod 17, and an adjustment screw 40 mounted within an end of the lever 18 may be adjusted to vary the degree of movement of the rod 17 and hence the range of tilt of the lever 18 and the amount of vertical displacement of the idler support pin 22.

When a record, such as a 33 r.p.m., having a relatively smaller diameter spindle opening than the 45 r.p.m. record illustrated, is placed on the adapter 30 over the spindle 31, the weight of the record will depress the adapter against the action of the spring 34, pushing down the rod 17 against an end of the lever 18, pivoting the latter about the fulcrum 20, causing the opposite end 21 of the lever 18 to rise, pushing up the pin 22 and its associated idler mount and idler pulley 24, wherefor the idler tread portion 29 will leave the larger diameter step 26 with which it is engaged when a 45 r.p.m. record is played and move upwardly into contact with the smaller diameter step 25 to drive the turntable at 33 r.p.m. It will be noted that when the 33 r.p.m. record is placed on the spindle causing idler pulley 24 to ascend into engagement with smaller diameter step 25 three resisting forces are overcome, namely, the reactive force of spring 34, the weight of idler pulley 24, and finally, the friction existing between the periphery of the idler pulley 24, and the engagement thereof with the inside of flange 11 and step 26. In other words, through the medium of an adapter means 31 which is depressed when a rec-

ord having a small center opening as a 33 r.p.m. record is placed thereon, and which merely acts to center a record having a large diameter opening e.g. 45 r.p.m., when a 45 r.p.m. record is played, an idler wheel pulley is adapted to move from engegement with the greater diameter step of the rotor shaft which drives the turntable at 45 r.p.m. to a step of lesser diameter and the turntable thereby operates at 33 r.p.m. It will be understood that the change is assisted by the rotation of the turntable.

Upon the removal of a record having a relatively small center spindle opening, e.g. a 33 r.p.m. record, from its seated position upon the adapter and turntable, the spring **34** beneath the record centering adapter forces the adapter to an upper position illustrated in FIG. 2. However, at this point the weight of the idler wheel **24** is not sufficient in and of itself to cause the wheel to drop over the rotor shaft shoulder provided at **26'** since the weight of the idler wheel **24** is not sufficient to overcome the static friction existing between the periphery of the idler wheel and the driving surfaces thereof, engaged with the inner wall of the turntable flange **11** and the step **26**. When, however, idler wheel **24** is caused to rotate, this frictional resistance is signficantly decreased and the weight of idler pulley **24** is then effective to cause the same to drop over rotor shaft shoulder **26'**, causing the periphery of wheel **24** to engage the 45 r.p.m. step **26**. Thus it will be seen that when a change is made from a 33 r.p.m. record to a 45 r.p.m. under conditions of rotation of the turntable, the idler wheel **24** will readily descend from engagement with step **25** to engagement with step **26**. Conversely, when a 33 r.p.m. record is replaced by a 45 r.p.m. when the turntable is in a "rest" position the speed change will not take place until the turntable is rotated when the idler tread **29** descends into engagement with step **26**.

In FIGURE 5 I have illustrated a preferred embodiment of an idler tread surface. It will be noted that as the idler tread **29** descends or ascends the descent or ascent is assisted through the provision of a chamfered surface **45** on idler tread **24**, best illustrated in FIGURE 5, which decreases the frictional resistance to movement. By providing the chamfered surface **45** with an angle which is relatively more acute than the taper of the shoulder **26'**, it will readily be seen that as the idler tread **45** descends or ascends the only frictional resistance encountered will be at the point of contact between the surface **45** and shoulder **26'** and a more rapid change occurs than would be possible if the taper of the shoulder and tread surface coincided. Although it will be obvious that the angular relationships between surface **45** and shoulder **26'** can be varied, it has been found that highly satisfactory results have ensued from the use of 30° and 45° angles, respectively, on tread surface **45** and shoulder **26'**.

The rotor shaft pulley steps may have a slight break on the edge of the shoulders but essentially are not necessarily chamfered.

Although I have described my invention in connection with a preferred embodiment, I am aware that numerous and extensive departures may be made therefrom, without however departing from the spirit of my invention or the scope of the appended chaims.

What I claim is:

1. In a record player comprising a turntable having a dependent peripheral flange, mounting means for said turntable, a rotor shaft having different diameter steps thereon, an idler wheel adapted to be interposed in driving engagement with said turntable flange and one of said steps, movable spindle means centrally located on said turntable for positioning a record to be played thereon, first rod means vertically having an end adapted to contact said centrally located spindle means and an opposite end adapted to contact a lever fulcrumed on said mounting means for pivotal movement relative thereto, a second rod means associated with said idler wheel and depending vertically therefrom, the second rod means parallel to the said first rod contacting said lever at a point distant from the contact of the latter with said first rod, whereby depression of said first rod means results in a corresponding elevation of said second rod means and thereby effects a desired speed change.

2. In a record player comprising a turntable having a dependent peripheral flange, mounting means for said turntable, a rotor shaft having different diameter steps thereon, an idler wheel adapted to be interposed in driving engagement with said turntable flange and one of said steps, movable spindle means centrally located on said turntable for positioning a record to be played thereon, first rod means vertically having an end adapted to contact said centrally located spindle means, means interposed between said first rod means and a second rod means whereby when said first rod means is depressed by means of contact with said centrally located means the said second rod means is correspondingly elevated to cause the idler wheel means associated therewith to contact the peripheral flange at a different level of driving engagement and simultaneously therewith contact a different diameter step of the rotor shaft.

3. In a record player comprising a turntable, means centrally located on said turntable for positioning a record to be played thereon, said means having a spring-receiving socket portion in the bottom thereof, spring means positioned in said socket between said turntable and said means, and resiliently biasing the latter into an uppermost position, a mounting plate, bushing means mounted on said mounting plate, spindle means mounted within said bushing means, rod means mounted in said spindle means for vertical movement therein and relative thereto, the upper end of said rod adapted to extend through said socket into engagement with the bottom of said centrally located means, the other end of said rod adapted to engage a pivotable lever causing movement thereof whereby a predetermined speed change is effected.

4. In a record player comprising a turntable having a dependent peripheral flange, mounting means for said turntable, idler pulley means adapted to be interposed in driving engagement with said turntable flange and either of a pair of different diameter steps on a rotor shaft, vertically movable adapter means on said turntable for positioning a record to be played thereon, spring means mounted between said adapter and said turntable, the vertically disposed centrally depending means secured to said idler wheel, vertically disposed reciprocally movable means contacting under surfaces of said adapter means, means interposed between said vertical means, whereby movement of one of said vertical means caused by a record of predetermined size and center opening being positioned on said adapter, overcomes the force of said spring and the frictional resistance between the periphery of said idler pulley and said turntable flange and an engaged one of said rotor shaft steps, causing said idler pulley to ascend into engagement with the other of said rotor shaft steps.

5. In a record player comprising a turntable having a dependent peripheral flange, mounting means for said turntable, idler pulley means adapted to be interposed in driving engagement with said turntable flange and either of a pair of different diameter steps on a rotor shaft, adapter means on said turntable for positioning a record to be played thereon, the vertically disposed centrally depending means secured to said idler wheel, vertically disposed reciprocally movable means contacting under surfaces of said adapter means, means interposed between said vertical means, whereby movement of one of said vertical means caused by a record having a relatively small center opening is removed from said turntable and seating engagement with said adapter means during rotation thereof, said idler pulley means will automatically descend into engagement with a step of different diameter to effect the speed change, and will simultaneously effect movement of said transmission means.

6. In a record player comprising a turntable having a dependent peripheral flange, mounting means for said turntable, a rotor shaft having different diameter steps thereon, idler pulley means adapted to be interposed in driving engagement with said turntable flange and one of said steps, first rod means, second rod means, and means interposed between said first rod means and said second rod means whereby when either said rod means is depressed the other rod means is elevated to cause the idler wheel integral therewith to be engaged with a different level of said peripheral flange and a different one of said steps, said idler wheel being mounted on a horizontally and vertically movable idler mount, manually movable lever means being rotatably secured to said idler mount, said lever having a notch in a peripheral portion lockingly engaging a pin fixed to said mounting means, whereby when said lever is rotated horizontally said pin engages said notch and holds said idler pulley means in a non-playing position.

7. The combination of claim 6 wherein said pin is lon-

gitudinally slotted in the upper portion thereof allowing for contraction thereof when disposed in said notch.

8. The combination of claim 7 wherein the slotted pin is made of plastic.

9. The combination of claim 6 wherein said means fixed to said mounting means comprises a vertically disposed post, and wherein said lever is adapted to rotate by means of the rotational engagement thereof with a link means which is mounted for rotation on said post.

References Cited in the file of this patent

UNITED STATES PATENTS

3,008,720	Ooki	Nov. 14, 1961

FOREIGN PATENTS

689,176	Great Britain	Mar. 25, 1953
1,130,354	France	Feb. 5, 1957
1,215,253	France	Nov. 16, 1959
1,246,823	France	Oct. 12, 1959