June 25, 1963 J. L. BUTLER 3,095,549

TRANSMISSION STRIP LINE CROSSOVER

Filed June 28, 1960

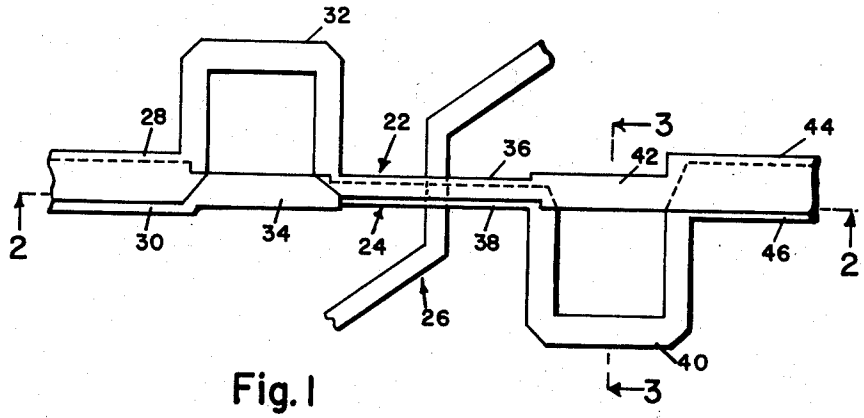

Fig. 1

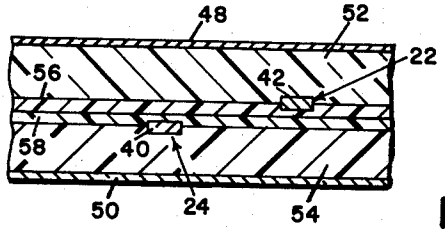

Fig. 3

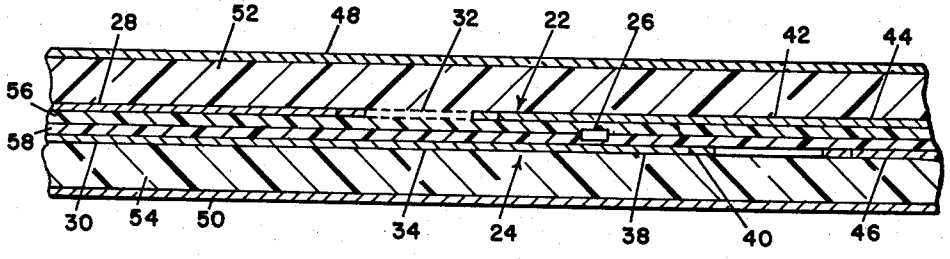

Fig. 2

Jesse L. Butler
INVENTOR

Robert O. Richardson
ATTORNEY

United States Patent Office 3,095,549 Patented June 25, 1963

3,095,549

TRANSMISSION STRIP LINE CROSSOVER

Jesse L. Butler, Nashua, N.H., assignor to Sanders Associates, Inc., Nashua, N.H., a corporation of Delaware

Filed June 28, 1960, Ser. No. 39,314
6 Claims. (Cl. 333—84)

This invention relates to the art of high frequency transmission lines. More particularly, it relates to a crossover in which a pair of signal paths carried on strip transmission lines intersect each other without appreciable crosstalk between them.

Most electric circuits having a fair degree of complexity require signal paths to cross over other signal paths without a transfer of energy from one path to the other. At low frequencies, this problem can easily be solved by use of a three dimensional construction in which one line arches over another at each crossover. At higher frequencies, where transmission lines are used and, more specifically, in the case of strip lines in which printed or etched circuits are used, a three dimensional crossover construction in which one transmission line arches over the other is relatively expensive to fabricate. Furthermore, it has a space requirement which works against the present-day trend to miniaturization.

Accordingly, a principal object of my invention is to provide an improved crossover adapted for the transposition of two transmission line signal paths.

Another object of my invention is to provide a crossover of the above character adapted for use in strip transmission lines.

A further object is to provide a crossover of the above type conforming generally to a two dimensional layout and therefore adapted for construction by printed circuit and like techniques.

A still further object of my invention is to provide a crossover of the above character having negligible crosstalk between intersecting signal paths.

Yet another object of the invention is to provide a crossover of the above character adapted for relatively inexpensive fabrication.

Other objects of the invention will in part be obvious and will in part appear hereinafter.

The invention accordingly comprises the features of construction, combination of elements, and arrangement of parts which will be exemplified in the construction hereinafter set forth, and the scope of the invention will be indicated in the claims.

In general, a transmission line crossover incorporating the features of my invention comprises a first strip transmission line having a pair of first center conductors disposed between a pair of ground plane conductors. A second transmission line crossing the first line includes a second center conductor also disposed between the ground plane conductors. The first line has first and second sections with the center conductors thereof in registration at the end points of these sections and diverging from each other to form loops within the sections. In each of the loops, one of the center conductors is an odd number of half wavelengths longer than the other. A third section of the first transmission line, in which the center conductors are in registration, is connected between the first and second sections, and the center conductor of the second

transmission line passes through the first line between the center conductors in the third section.

For a fuller understanding of the nature and objects of the invention, reference should be had to the following detailed description taken in connection with the accompanying drawings, in which:

FIGURE 1 is a plan view showing the center conductors of a pair of strip transmission lines in a crossover made according to my invention,

FIGURE 2 is a simplified longitudinal vertical section of the crossover of FIGURE 1 taken along line 2—2 therein, and

FIGURE 3 is a transverse section taken along line 3—3 of FIGURE 1.

FIGURE 1 illustrates a crossover incorporating the principles of my invention and includes a pair of center conductors generally indicated at 22 and 24, belonging to a first transmission line, and a center conductor generally indicated at 26, belonging to a second line intersecting the first line. The conductors 22, 24 and 26 are disposed between a pair of ground plane conductors (not shown in FIGURE 1). Proceeding from the left, the conductors 22 and 24 have sections 28 and 30 in registration with each other and operating as an ordinary strip line. Thus, they may be connected together by suitable means (not shown) to maintain them at the same potential.

Next, the conductor 22 departs from the conductor 24 to form a loop 32, while the conductor 24 proceeds in a straight section 34. The conductors are then in registration in intermediate sections 36 and 38, following which, one of them, in this case the conductor 24, describes a loop 40. The conductor 22 proceeds past the loop 40 in a section 42, and the two conductors finally return to registration with each other in sections 44 and 46. The sections 36 and 38 are insulated from each other, although the other sections are not.

At each loop, one of the two conductors 22 and 24 has a length an odd number of half wavelengths greater than the other conductor. Thus, the loop 32 may be a single half wavelength longer than the section 34. Accordingly, energy entering the crossover by way of the sections 28 and 30 in a normal strip line mode, is split into two portions travelling along the loop 32 and section 34, respectively, and arriving at the sections 36 and 38 in phase opposition. That is, the voltage and current in the section 36 are 180 degrees out of phase with the voltage and current in opposite portions of the section 38. This region of the transmission line therefore operates in a parallel plate mode. Finally, after traversing the loop 40 and section 42, another half wavelength relative phase change takes place, so that, in the sections 44 and 46, the voltages are again in phase and equal. Therefore, these sections, which may be connected together, serve as center conductors in a line operating in a normal strip line mode.

In the parallel-plate portions 36—38 of the transmission line, an electric field extends directly between the conductors 22 and 24; and it follows that there is a neutral equipotential plane midway between the two conductors and perpendicular to a line extending between them. Thus, this plane is parallel to the strips comprising the conductors 22 and 24; the conductor 26, which is disposed in the plane, does not disturb the field configuration resulting from energy guided by the conductors 22 and 24. In other words, none of the energy propagated along the

line comprising the latter two conductors is transferred to the conductor 26.

It should be noted that the same result would not follow if the conductor 26 passed between the conductors 22 and 24 at the sections 28—30 or 44—46, where the line comprising these sections operates in a normal strip line mode with the voltages equal and in phase. The reason for this is that there is no field between the conductors 22 and 24 in these sections. Rather, the electric fields extend from these conductors to the ground plane conductors between which they are sandwiched. The equipotential surfaces are generally elliptic in cross section with the center conductors in the centers of the ellipses. A center conductor passing between them would have to pass through points normally having different potentials, and energy transfer would therefore take place. In fact, for this reason, there is negligible transfer of energy from the conductor 26 to the conductors 22 and 24. The latter conductors more or less coincide with the flat portions of the elliptic equipotential surfaces around the conductor 26 operating in a strip line mode.

Furthermore, energy coupled from the transmission line including the center conductor 26 to the line including the conductors 22 and 24 will induce equal voltages and currents in the latter conductors because of the symmetry of their position with respect to the conductors 26. After passing through the loops 32 and 40 and straight sections 34 and 42, this energy will arrive at the sections 28—30 and 44—46 in phase opposition between the two conductors (assuming, for example, that the frequencies propagated along the two transmission lines are the same). Since the conductors 22 and 24 are shorted together in the sections 28—30 and 44—46, energy coupled from the conductor 26 cannot be propagated along these sections.

It will be noted that the sizes of the conductors 22 and 24 vary throughout the crossover. Thus, proceeding from the sections 28—30 in which a characteristic impedance Z_0 may be assumed, the lines diminish in width in the loop 32 and section 34. The line capacitance is thus decreased and the inductance increased, resulting in an increase in characteristic impedance. The widths should be such that each conductor provides a characteristic impedance of $2Z_0$ in this region. Thus, the parallel combination of the loop 32 and section 34 present an impedance of Z_0 to the section 28—30, and the energy in the latter section divides equally between the loop and the section 34. The width of the conductors 22 and 24 in the section 36—38 should again be such as to provide an impedance match with the preceding section. The same relationships hold true with the line widths in the loop 40 and section 42 and also the section 44—46.

As seen in FIGURES 2 and 3, the crossover is disposed between a pair of ground plane conductors 48 and 50. The ground plane conductors, as well as the center conductors 22 and 24, are preferably bonded to insulators 52 and 54, with the center conductors shaped by conventional printed or etched circuit techniques. Another pair of insulators 56 and 58 are disposed between the conductors 22 and 24, and the conductor 26 is bonded to one of these latter insulators.

The relative dimensions in the drawings have been exaggerated for purposes of clarity. Actually, the various conductors are preferably of foil a few mils thick. Also, the space between the conductors 22 and 24 is materially less than it would appear from the drawings. For example, it may be on the order of 5 mils.

Thus, I have described a transmission line crossover adapted for use with transmission lines fabricated by printed circuit techniques. The crossover, which makes use of strip line techniques, includes a split center conductor configuration for one of the intersecting transmission lines and a single center conductor for the other. By means of half wavelength differential sections, the line including a split center conductor is converted from a strip line mode to a parallel plate mode and then back again. In the parallel plate region, the center conductor of the other line passes between the split conductors in a neutral equipotential plane, thereby providing essentially complete isolation between the two lines.

From the above, it will be apparent that a crossover incorporating the features of my invention may be fabricated more easily and compactly than an arching crossover, particularly in circuits using strip transmission lines.

It will thus be seen that the objects set forth above, among those made apparent from the preceding description, are efficiently attained and, since certain changes may be made in the above construction without departing from the scope of the invention, it is intended that all matter contained in the above description or shown in the accompanying drawings shall be interpreted as illustrative and not in a limiting sense.

It is also to be understood that the following claims are intended to cover all of the generic and specific features of the invention herein described, and all statements of the scope of the invention which, as a matter of language, might be said to fall therebetween.

What is claimed is:

1. A transmission line crossover comprising a first transmission line having a pair of first center conductors disposed between a pair of ground plane conductors, a second transmission line including a second center conductor disposed between said ground plane conductors, first and second sections in said first line, said first center conductors being substantially in registration at the end points of said first and second sections and one of said first conductors being an odd number of half wavelengths longer than the other in each of said first and second sections, a third section between said first and second sections, said first conductors being in registration in said third section, insulating means disposed between said first conductors in said first, second and third sections, said second center conductor passing through said first transmission line between said first conductors in said third section.

2. The combination defined in claim 1 in which said second center conductor is disposed in a plane substantially midway between said first conductors in said third section.

3. A transmission line crossover comprising a first transmission line having a pair of first center conductors disposed between a pair of ground plane conductors, a second transmission line including a second center conductor disposed substantially midway between said ground plane conductors, said first line including a pair of conversion sections converting propagation along said line between a strip line mode in which said first center conductors are at substantially the same potential and a parallel plate mode in which said first center conductors are at substantially equal and opposite potentials with respect to each other, said conversion sections being spaced apart along said first transmission line to form a parallel plate section between them, said second center conductor passing through said first line between said first conductors in said parallel plate section.

4. The combination defined in claim 3 in which said second center conductor is disposed in a plane substantially midway between said first conductors in said parallel plate section.

5. A transmission line unit comprising a pair of ground plane conductors and a pair of first center conductors disposed between them, a first section in which said center conductors are in registration at the end points thereof, one of said first conductors being an odd number of half wavelengths longer than the other in said first section, a second section similar to said first section, a third section of said line disposed between said first and second sections, said center conductors being in registration in said third section.

6. A transmission line crossover comprising a first transmission line having a pair of ground plane conductors and a pair of first center conductors disposed between them, a second transmission line including a second center conductor disposed between said ground plane conductors, a first section in which said center conductors are of unequal length, a second section spaced from and connected to said first section through a third section, said center conductors being of unequal length in said second section and of equal length in said third section whereby the total length of said first center conductors in said sections are equal, said second center conductor passing through said first transmission line between said conductors in said third section.

References Cited in the file of this patent

UNITED STATES PATENTS

2,155,652	Gothe et al.	Apr. 25, 1939
2,401,717	Wolff et al.	June 4, 1946
2,865,006	Sabaroff	Dec. 16, 1958