May 2, 1967 L. F. FUNKE 3,317,123

COMPRESSOR LUBRICATION

Filed Sept. 2, 1965 3 Sheets-Sheet 1

Fig. 1.

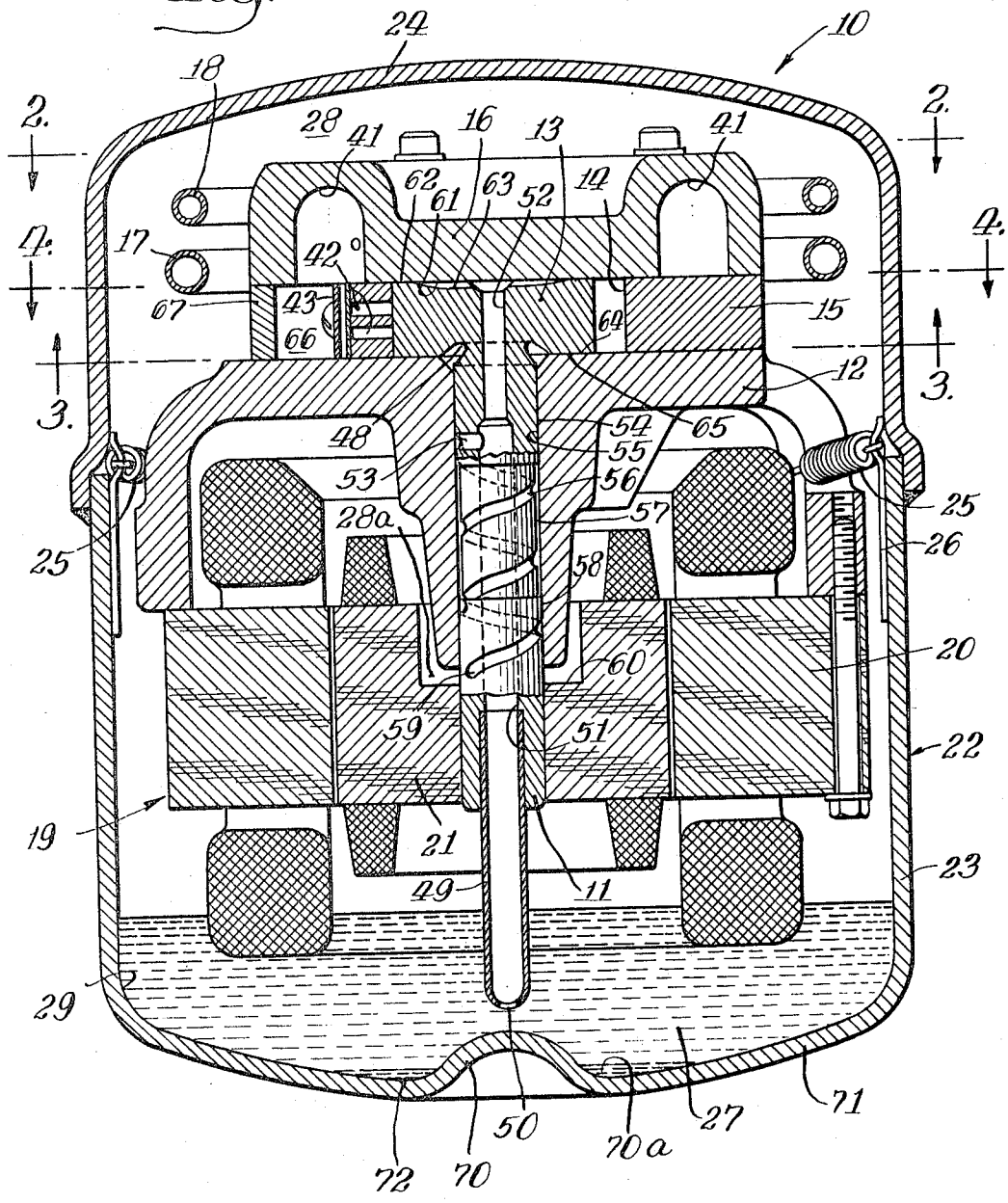

Inventor:—
Ludwig F. Funke,
By Hofgren, Wegner, Allen,
Stellman & McCord Attys.

May 2, 1967 L. F. FUNKE 3,317,123

COMPRESSOR LUBRICATION

Filed Sept. 2, 1965 3 Sheets-Sheet 2

Fig. 2.

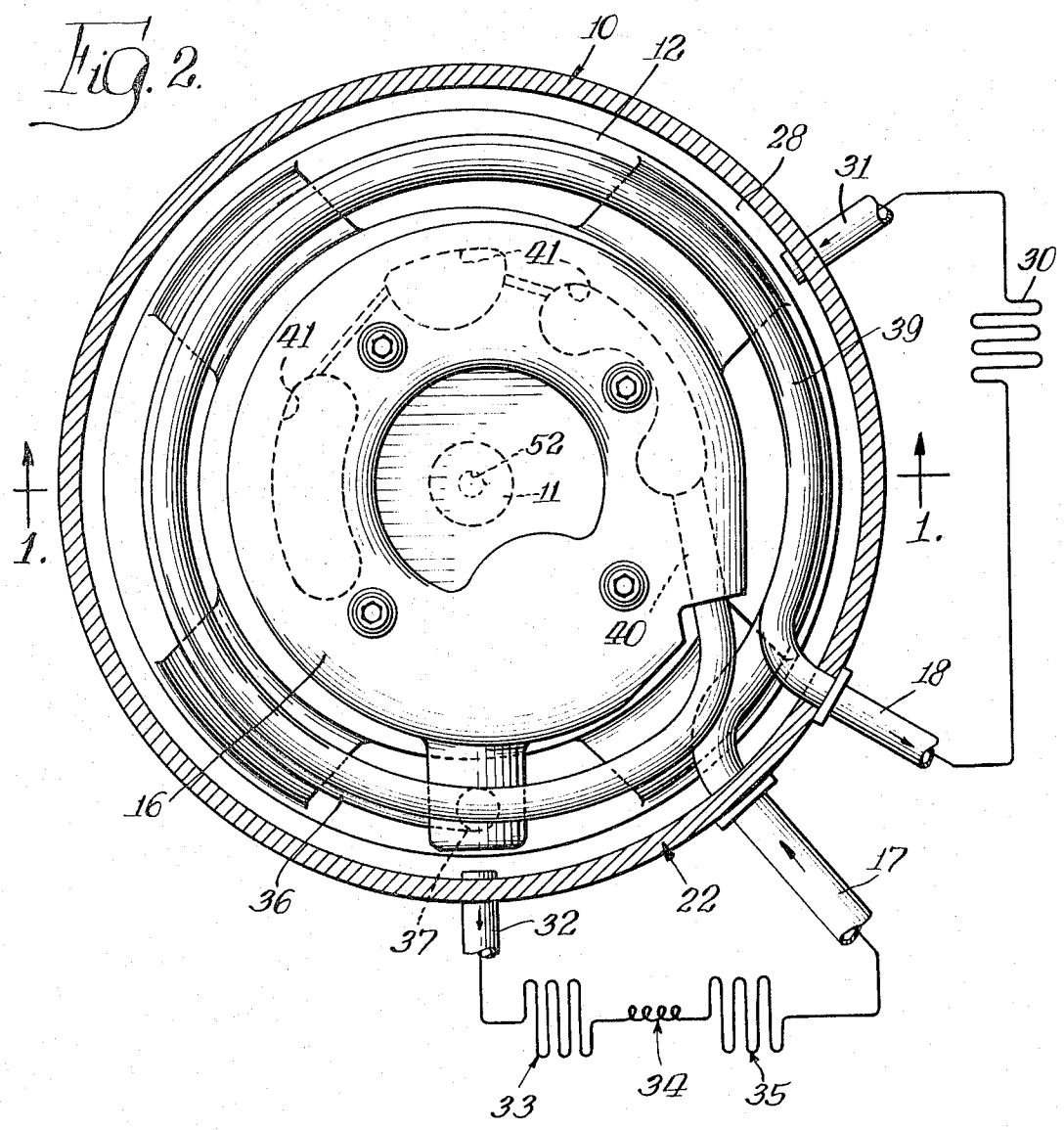

May 2, 1967 L. F. FUNKE 3,317,123

COMPRESSOR LUBRICATION

Filed Sept. 2, 1965 3 Sheets-Sheet 3

Fig. 3.

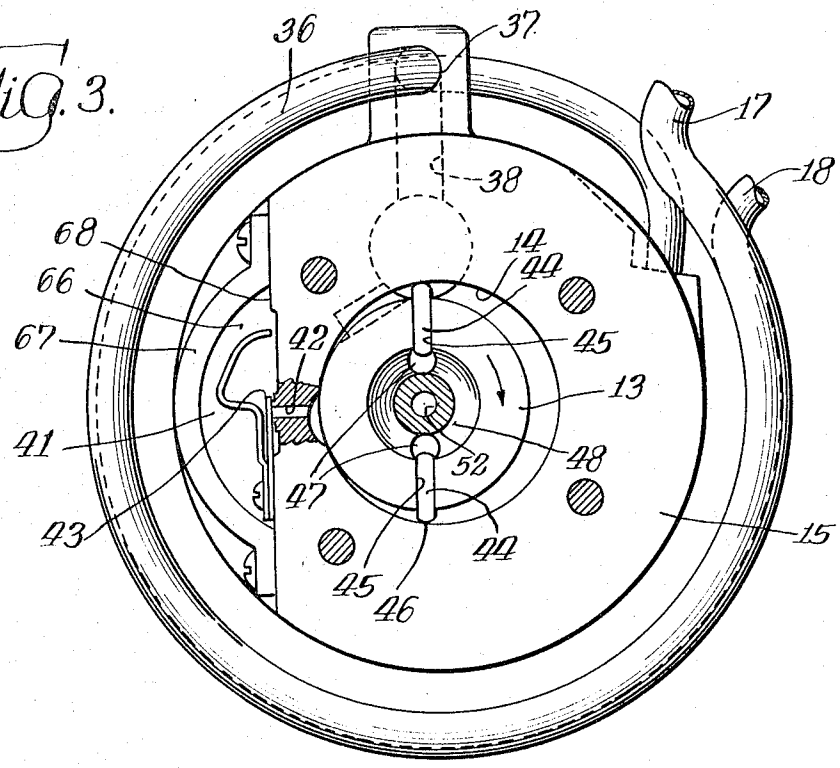

Fig. 4.

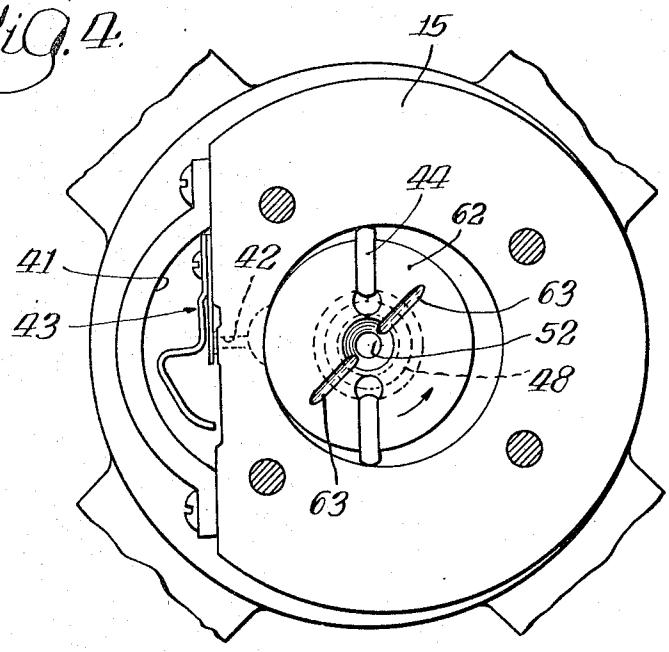

United States Patent Office 3,317,123 Patented May 2, 1967

3,317,123

COMPRESSOR LUBRICATION

Ludwig F. Funke, Evansville, Ind., assignor to Whirlpool Corporation, a corporation of Delaware

Filed Sept. 2, 1965, Ser. No. 484,589
13 Claims. (Cl. 230—207)

This invention relates to compressors and in particular to rotary compressors such as for use in refrigeration apparatus.

In one conventional form of rotary compressor, a rotor is carried on a rotated shaft for compressing refrigerant vapor in a compression chamber. The motor for driving the shaft is disposed coaxially of the rotor and the entire assembly is enclosed in a suitable housing. Lubrication of the rotating parts is effected by means of a body of lubricating fluid such as oil collected in a sump in the bottom of the housing and delivered to the rotating parts by suitable distributing means. The present invention comprehends a novel compressor structure having new and improved means for distributing the lubricating fluid to the moving parts of the compressor for improved efficient lubrication thereof.

A principal feature, therefore, of the present invention is the provision of a new and improved compressor structure.

Another feature of the invention is the provision of such a compressor structure having new and improved means for lubrication thereof.

Still another feature of the invention is the provision of such a compressor structure wherein the compressor chamber and rotor are disposed in the upper portion of the housing for improved silent operation of the apparatus.

A yet further feature of the invention is the provision of such a compressor structure wherein a minimum number of structural elements are required thereby providing an improved simple and economical construction.

Another feature of the invention is the provision of such a compressor structure having a rotatable shaft, means for compressing a fluid as a result of rotation of the shaft and providing a pressure lower than the pressure of the compressed fluid adjacent one portion of the shaft, first means journalling the first portion of the shaft, and second means journalling a second portion of the shaft, lubricating means comprising means providing a mixture of lubricating oil and the fluid, means responsive to the rotation of the shaft for separating the lubricating oil from the mixture and delivering a portion of the separated oil to between the second portion and the second journalling means for lubricating the same, and means for conducting a second portion of the separated oil to one portion of the shaft for lubricating the same as a result of the differential between the pressure of the compressed fluid and the lower pressure.

A further feature of the invention is the provision of such a compressor structure wherein the conducting means conducts the separated oil to the compressing means for lubricating the same as a result of the pressure differential.

Still another feature of the invention is the provision of such a compressor structure having a shaft, means journalling the shaft, means defining a compression chamber, and means on the shaft in the chamber slidably engaging the chamber means for pressurizing fluid in the chamber, lubricating means comprising means for disposing a body of lubricating fluid to be contacted by the pressurized fluid, means on the shaft for withdrawing a mixture of lubricating fluid and pressurized fluid from the disposing means, means on the shaft for separating lubricating fluid from the mixture and delivering the separated lubricating fluid to between the journalling means and shaft, and

means on the shaft for delivering the residual mixture of lubricating fluid and pressurized fluid to between the chamber means and pressurizing means.

A yet further feature of the invention is the provision of such a compressor structure having a shaft, means journalling the shaft for rotation about a vertical axis, means defining a compression chamber, means on an upper portion of the shaft and in the chamber slidably engaging the chamber means for pressurizing fluid in the chamber, means for disposing a body of lubricating fluid at a lower portion of the shaft to be contacted by the pressurized fluid, means on the shaft for withdrawing a mixture of lubricating fluid and pressurized fluid from the disposing means, means on an upper portion of the shaft for separating lubricating fluid from the mixture and delivering the separated lubricating fluid downwardly to between the journalling means and shaft, and means on the shaft for delivering the residual mixture of lubricating fluid and pressurized fluid to between the chamber means and pressurizing means.

Still another feature of the invention is the provision of such a compressor structure having lubrication means including an inlet, means for providing lubricating oil to the inlet, comprising wall means defining a sump and having a bottom portion provided with an upstanding element, and means for retaining the inlet directly above the element whereby undesirable materials in the lubricating oil collected in the bottom portion of the wall means are effectively prevented by the element from passing to the inlet.

Yet another feature of the invention is the provision of such a compressor structure wherein the element comprises an integral boss on the bottom portion of the wall means.

Other features and advantages of the invention will be apparent from the following description taken in connection with the accompanying drawings wherein:

FIGURE 1 is a vertical diametric section of a compressor embodying the invention;

FIGURE 2 is a horizontal section taken substantially along the line 2—2 of FIGURE 1;

FIGURE 3 is a reduced horizontal section taken substantially along the line 3—3 of FIGURE 1; and

FIGURE 4 is a reduced horizontal section taken substantially along the line 4—4 of FIGURE 1.

In the exemplary embodiment of the invention as disclosed in the drawing, a compressor generally designated **10** is shown to comprise a shaft **11** journalled for rotation about its longitudinal axis in a front head **12** and carrying at its upper end a rotor **13** rotatably disposed in a compression chamber **14** of a cylinder **15**. A rear head **16** overlies the cylinder **15** and has connected thereto a suction line **17** and a discharge line **18**. The shaft is rotated by means of an electric motor generally designated **19** having a stator **20** fixedly retained relative to the front head **12** and an armature **21** carried on the shaft **11**.

The above discussed elements are hermetically enclosed in a housing **22** including a lower, upwardly opening cup-shaped portion **23** and an upper, downwardly opening cup-shaped portion **24**. The assembly of the above indicated parts is resiliently mounted in the housing **22** in an inverted position, that is, the motor **19** is at the lower end of the housing and the rear head **16** is at the upper end. This resilient mounting is accomplished by means of a plurality of coil springs **25** extending between the front head **12** and suitable clips **26** secured to the interior of the housing **22**. A body of lubricating fluid, or oil, **27** is provided within the space **28** defined by the housing **22** and is collected in a lower sump portion **29** thereof. The inverted mounting arrangement referred to above places the major noise producing elements of the

compressor well above the level of oil in sump 29 to effect quieter operation of the apparatus by precluding the transmission of noise from the assembly to the housing through a relatively dense oil medium.

Referring now to FIGURE 2, the compressor 10 may be utilized in conjunction with a refrigeration apparatus wherein the fluid compressed therein comprises refrigerant gas which is delivered from the compressor through the discharge conduit 18 to a conventional precooler 30 and thence back into the space 28 within housing 22 through a return conduit 31. In such operation, the refrigerant gas as so returned to the space 28 is under a substantial pressure such as approximately 200 p.s.i. The high pressure refrigerant vapor is then conducted from the space 28 through a second discharge conduit 32 to the external refrigeration apparatus illustratively comprising a conventional condenser 33, a conventional capillary 34, and a conventional evaporator 35 connected in series between conduit 32 and suction conduit 17.

The conduit 17 includes an annular portion 36 within space 28 circumjacent the rear head 16 and provided with an end portion 37 communicating with the compression chamber 14 through a passage 38 (FIGURE 3) in the rear head. Conduit 18 similarly includes an annular portion 39 within space 28 circumjacent the rear head 16 and superjacent the annular portion 36 of conduit 17. As shown in FIGURE 2, the inner end of conduit portion 39 is provided with a connecting portion 40 communicating with a plurality of series connected muffler spaces 41 in rear head 16.

Referring now more specifically to FIGURE 3, the rotor 13 is eccentrically disposed within the cylindrical compression chamber 14 so as to substantially have surface contact with the wall of the chamber at a point approximately 270° from passage 38 (in a clockwise direction as seen in FIGURE 3), at which point a passage 42 is provided through the cylinder 15 opening into a space 66 defined by a wall member 67, cylinder face 68 and upper surface 64 (FIGURE 1) of the front head 12. Space 66 in turn communicates with muffler cavities 41. A discharge valve 43 is provided on the cylinder face 68 for precluding reverse flow from space 66 through passage 42 while permitting flow of compressed refrigerant fluid from compression chamber 14 therethrough into the muffler chambers 41 during the operation of the compressor.

The low pressure refrigerant gas is compressed in chamber 14 by means of a pair of rotor blades 44 slidably carried by the rotor 13 in diametrically opposite slots 45 therein whereby the outer ends 46 of the rotor blades 44 slidably follow the wall of chamber 14 as the rotor rotates therein. The rotor is further provided with a pair of back blade openings 47 at the radially inner end of the respective slots 45, the openings 47 being in fluid communication with each other through an annular groove 48 formed at the juncture of shaft 11 and rotor 13. The major volume of chamber 14 is thusly under a pressure which is substantially below the outlet or discharge pressure of the refrigerant gas in outlet passage 42. The pressure within the back blade openings 47 and the annular groove 48 is also lower than the discharge pressure. As only a small drop in the pressure of the compressed gas occurs in the flow of the compressed gas through the muffler chambers 41, conduit 18, precooler 30 and conduit 31, the pressure of the gas within the space 28, commonly referred to as the dome pressure, is also substantially higher than the pressure within openings 47, groove 48 and the major portion of chamber 14. This pressure differential is utilized herein for providing improved lubrication of the compressor parts as will now be described in greater detail.

Lubrication of the moving parts of compressor 10 is effected herein by delivering the lubricating oil 27 upwardly from the sump 29. For this purpose, an oil pick-up tube 49 is secured to the lower end of shaft 11 to depend therefrom into the lubricating oil body 27. The tube is

provided with an opening 50 at its lower end and opens upwardly into an axial, lower bore 51 in the shaft 11 which, in turn, opens upwardly into a reduced diameter bore 52 in the upper end of the shaft and extending axially outwardly through the rotor 13. In the illustrated embodiment, the rotor 13 is formed integrally with the shaft 11 and, thus, bore 52 comprises a continuous passage therethrough. A radial port 53 is provided in the shaft at the upper end of the bore 51, opening outwardly to between the outer surface 54 of the shaft and the inner cylindrical surface 55 of the front head 12 which defines the support bearing for the shaft. A radially outwardly opening spiral groove 56 is provided in the shaft starting adjacent port 53 and extending downwardly through a reduced diameter portion 57 of the shaft below port 53. The groove 56 terminates in a lower surface portion 58 of the shaft having a diameter substantially equal to that of surface 54 and is thus journalled in a lower portion of the bearing surface 55. The lower end 59 of the groove 56 communicates with a space 28*a* (FIGURE 1) between the front head 12 and the armature 21 in communication with space 28.

In the lubrication of the moving parts of the compressor, a certain amount of oil will continually reach the compression chamber 14 and will subsequently, together with the compressed refrigerant gas, be discharged to the precooler 30. Thus, the oil which returns to the housing 22 from the precooler will contain entrained refrigerant gas. Such a mixture of oil and refrigerant gas has long presented a problem in the lubrication of refrigerant compressors. More specifically, as the mixture of gas and oil passes through the surfaces to be lubricated, the release of the gaseous refrigerant from the mixture represents voids within the lubricant which can result in undue wear and galling of the bearing surfaces. Thus, it is a primary feature of this invention to provide means for separating the refrigerant gas from the oil and gas mixture and to route these unwanted gases to an area where they will not interfere with the proper lubrication of the compressor.

Rotation of shaft 11 as during operation of the compressor 10 causes lubricating fluid to pass upwardly through tube 49 and bore 51 to port 53. As stated above, this lubricating fluid is a mixture of oil and entrained refrigerant gas. The centrifugal force generated by the rotation of the shaft 11, however, causes the relatively heavy lubricating oil to be effectively centrifuged radially outwardly from the mixture in tube 49 and bore 51 leaving a relatively light frothy mixture of gas and oil in the center, or axial, portion of the bore 51. Concurrently, heat energy in shaft 11 causes separation of the relatively volatile refrigeration gas from the lubricating oil, thereby further effectively separating refrigerant gas from the oil in the radially outer portion of the bore 51 adjacent port 53. The relatively pure lubricating oil passes outwardly through port 53 to between shaft surface 54 and bearing surface 55 to lubricate the shaft. The lubricating oil is further conducted downwardly through the spiral groove 56 to lubricate the lower portion of the bearing surface 55 journalling the lower shaft surface 58. The lubricating oil subsequently passes out lower end 59 and back to sump 29.

The relatively pure lubricating oil passing outwardly through port 53 also flows upwardly between surfaces 54 and 55 to the annular groove 48 and the back blade openings 47 to lubricate the upper surface 64 of the front head 12 and the lower surface 65 of the rotor 13. This upward movement of the mixture and the oil is efficiently effected herein by the substantial pressure differential existing between the relatively high dome pressure acting on the lubricating oil in sump 29 and the relatively low pressures discussed above existing in the back blade openings 47, annular groove 48 and the major portion of chamber 14. Illustratively, the pressure in the openings 47, groove 48 and low pressure portions of chamber 14

may be approximately 100 p.s.i. and, thus, the oil pumping pressure differential as compared to the dome pressure may be approximately 100 p.s.i.

The mixture of oil and refrigerant gas in the center portion of the upper end of bore **51** moves upwardly through bore **52** to between the lower surface **61** of the rear head **16** and the upper surface **62** of the rotor **13** through a pair of diametrically opposed outwardly extending upwardly opening grooves **63** in the upper surface **62** of the rotor. The grooves, as illustrated in FIGURE 4, preferably do not extend fully to the radially outer circumference of the rotor **13** thereby to assure distribution of the desirable lubricating oil uniformly between surfaces **61** and **62** for improved efficient lubrication thereof. Thus, the lubricating oil reaching grooves **63** will flow between the surfaces **61** and **62** as it seeks the relatively low pressure area within the chamber **14**. The lubrication requirement between surfaces **61** and **62** is such that the relatively diluted lubricating fluid delivered therebetween (the mixture of lubricating fluid and refrigerant gas) suitably lubricates these surfaces. As the lubricating fluid leaves surfaces **61** and **62**, it passes into the chamber **14** and thereby suitably lubricates the outer end portion **46** of the rotor blades **44** as they slide against the wall surfaces of chamber **14**. Thus, the refrigerant gas in the mixture is efficiently returned to the suction side of the chamber **14** for compression with the returned vapor delivered through passage **38**.

It is desirable to preclude complete drainage of the lubricating oil from between the moving parts as during normal shutdown of the compressor. To this end, the cross section of spiral groove **56** is made to be relatively small so as to retain a quantity of the lubricating oil therein at all times. Further, as the delivery of lubricating oil through tube **49** and bore **51** occurs quite rapidly upon initiation of operation of the compressor, the normal lubrication of the moving parts discussed above is commenced substantially immediately upon start-up. It is further desirable to utilize the groove **56** as a means for routing undesirable foreign matter, etc., from between the bearing surfaces and, thus, while the groove is small in cross section, it is advantageously of sufficient size to pass sludge, metal chips, and other such foreign particles from the bearing surfaces to the sump **29** through lower end **59** of the groove. Re-entry of these materials to the tube **49** during recirculation of the oil thereto from sump **29** is effectively precluded herein by providing a boss **70** in the bottom wall **71** of the housing member **23** which causes the foreign matter **72** to collect around the base of the boss in an area **70***a* substantially removed from the tube inlet **50**.

In operation, motor **20** is suitably energized to rotate shaft **11** and thereby rotate rotor **13**. The low pressure refrigerant gas from conduit **17** is delivered through passage **38** (FIGURE 3) into the compression chamber **14** wherein the gas is compressed as it is carried around the chamber by the rotor blades **44** to be discharged as a high pressure, compressed gas through the outlet **42**. The high pressure gas after being precooled is then delivered into the space **28** and, thus, provides a high dome pressure acting against the lubricating oil **27** in sump **29** which, together with the action of the rotating shaft, causes the oil to rise upwardly through the tube **49** and shaft **11** to lubricate the moving parts of the compressor as discussed above. The lubricating oil is constantly returned to the sump **29** for recirculation to the moving parts thereby to provide continuous lubrication of the compressor during operation thereof.

Thus, as discussed above, the compressor **10** comprises an improved compressor structure of simple and economical construction which effectively minimizes noise and provides improved long life with minimum maintenance. The compressor provides for automatic separation of the refrigerant gas from the lubricating oil and return of the gas to the suction side of the compressor while providing improved relatively gas-free lubricating oil to the main bearing surfaces of the compressor. The compressor **10** further provides the highly desirable feature of self-cleaning of the bearing surfaces and separation of the foreign matter in the sump **29**. Still further, as a result of the improved arrangement of the rear head at the upper portion of the apparatus, the conventional muffler cover and gasket of the known apparatuses is eliminated, thereby further reducing the cost and simplifying the construction of the compressor.

While I have shown and described one embodiment of my invention, it is to be understood that it is capable of many modifications. Changes, therefore, in the construction and arrangement may be made without departing from the spirit and scope of the invention as defined in the appended claims.

The embodiment of the invention in which an exclusive property or privilege is claimed is defined as follows:

1. In a compressor having a shaft,
means journalling said shaft,
means defining a compression chamber, and
means on said shaft in said chamber slidably engaging said chamber means for pressurizing fluid in said chamber,
lubricating means comprising:
means for disposing a body of lubricating fluid to be contacted by the pressurized fluid;
means carried by said shaft for withdrawing a mixture of lubricating fluid and pressurized fluid from said disposing means;
means on said shaft for separating lubricating fluid from said mixture and delivering said separated lubricating fluid to between said journalling means and shaft; and
means on said shaft for delivering the residual mixture of lubricating fluid and pressurized fluid to between said chamber means and pressurizing means.

2. The compressor of claim **1** wherein said pressurizing means causes a portion of said chamber to be at a pressure below that of the pressurized fluid and said residual mixture delivering means is arranged to deliver said residual mixture to said chamber portion.

3. In a compressor having a shaft,
means journalling said shaft,
means defining a compression chamber, and
means on said shaft in said chamber slidably engaging said chamber means for pressurizing fluid in said chamber,
lubricating means comprising:
means for disposing a body of lubricating fluid to be contacted by the pressurized fluid;
means on said shaft for withdrawing a mixture of lubricating fluid and pressurized fluid from said disposing means;
means on said shaft for separating lubricating fluid from said mixture and forcibly flowing said separated lubricating fluid between said journalling means and shaft; and
means carried by said shaft for delivering the residual mixture of lubricating fluid and pressurized fluid to between said chamber means and pressurizing means.

4. The compressor of claim **3** wherein said pressurizing means causes a portion of said chamber to be at a pressure below that of the pressurized fluid and said residual mixture delivering means is arranged to deliver said residual mixture to said chamber portion.

5. The compressor of claim **3** wherein said separating means defines centrifugal pump means.

6. The compressor of claim **3** wherein said shaft extends vertically and said separating means is provided at an upper portion of said shaft, said flowing means extending downwardly from said separating means.

7. In a compressor:
a shaft;
means journalling said shaft for rotation about a vertical axis;

means defining a compression chamber;
means on an upper portion of said shaft and in said chamber slidably engaging said chamber means for pressurizing fluid in said chamber;
means for disposing a body of lubricating fluid at a lower portion of said shaft to be contacted by the pressurized fluid;
means on said shaft for withdrawing a mixture of lubricating fluid and pressurized fluid from said disposing means;
means on said shaft for separating lubricating fluid from said mixture and delivering said separated lubricating fluid to between said journalling means and shaft; and
means carried by said shaft for delivering the residual mixture of lubricating fluid and pressurized fluid to between said chamber means and pressurizing means.

8. In a compressor:
a shaft;
means journalling said shaft for rotation about a vertical axis;
means defining a compression chamber;
means on an upper portion of said shaft and in said chamber slidably engaging said chamber means for pressurizing fluid in said chamber;
means for disposing a body of lubricating fluid at a lower portion of said shaft to be contacted by the pressurized fluid;
means on said shaft for withdrawing a mixture of lubricating fluid and pressurized fluid from said disposing means;
means on an upper portion of said shaft for separating lubricating fluid from said mixture and delivering said separated lubricating fluid downwardly to between said journalling means and shaft; and
means carried by said shaft for delivering the residual mixture of lubricating fluid and pressurized fluid to between said chamber means and pressurizing means.

9. In a compressor:
a shaft;
means journalling said shaft;
means defining a compression chamber at one end of said shaft;
rotor means on said shaft in said chamber for pressurizing fluid in said chamber;
sump means at the other end of said shaft for disposing a body of lubricating fluid to be contacted by the pressurized fluid;
means on said shaft for withdrawing lubricating fluid from said sump means;
means on said shaft for delivering lubricating fluid downwardly to between said journalling means and shaft; and
means carried by said shaft for delivering lubricating fluid upwardly to between said chamber means and rotor means.

10. In a compressor having a shaft,
a rotor on said shaft,
a front head journalling said shaft,
a cylinder defining a compression chamber, said rotor being disposed in said chamber for compressing fluid therein,

said cylinder further defining a space for receiving high pressure fluid from said compression chamber,
a rear head defining means for conducting low pressure fluid to said chamber and high pressure fluid from said space,
a motor rotating said shaft,
a housing, and
means resiliently mounting said shaft, rotor, front head, rear head, and motor as a unit in said housing,
said rear head comprising a one-piece member defining a muffler chamber opening to said space and a delivery passage opening to said compression chamber.

11. In a rotary compressor having a rotatable shaft, means at one portion of the shaft for compressing a fluid as a result of rotation of said shaft and providing a pressure adjacent said one portion of the shaft lower than the pressure of the compressed fluid, and means journalling a second portion of said shaft, lubricating means comprising: means providing a mixture of lubricating oil and said compressed fluid; means responsive to the rotation of the shaft for separating said lubricating oil from the mixture and delivering a first portion of the separated oil to between said second shaft portion and said journalling means for lubricating the same; and means for conducting a second portion of said separated oil to said compressing means for lubricating the same, said second oil portion being flowed through said conducting means as a result of the differential between the pressure of the compressed fluid and said lower pressure.

12. In a rotary compressor having a rotatable shaft, means at one portion of the shaft for compressing a fluid as a result of rotation of said shaft and providing a pressure adjacent said one portion of the shaft lower than the pressure of the compressed fluid, and means journalling a second portion of said shaft, lubricating means comprising: means providing a mixture of lubricating oil and said compressed fluid; means responsive to the rotation of the shaft for separating said lubricating oil from the mixture and delivering a first portion of the separated oil to between said second shaft portion and said journalling means for lubricating the same; and means for conducting a second portion of said separated oil to said one portion of the shaft for lubricating the same, said second oil portion being flowed through said conducting means as a result of the differential between the pressure of the compressed fluid and said lower pressure.

13. The rotary compressor means of claim 12 wherein said conducting means further conducts separated lubricating oil to said compressing means for lubricating the same, as a result of said pressure differential.

References Cited by the Examiner

UNITED STATES PATENTS

2,040,641	5/1936	Bingham	230—207 X
3,008,628	11/1961	Gerteis et al.	230—206 X
3,098,604	7/1963	Dubberley	230—206
3,103,180	9/1963	Hyde	230—206 X

ROBERT M. WALKER, *Primary Examiner.*