July 25, 1972 P. L. FLEISCHNER 3,679,463

APPARATUS AND METHOD FOR CONTINUOUSLY DEPOSITING BERYLLIA THROUGH VAPORIZATION OF A BASIC FORMATE

Filed June 8, 1970

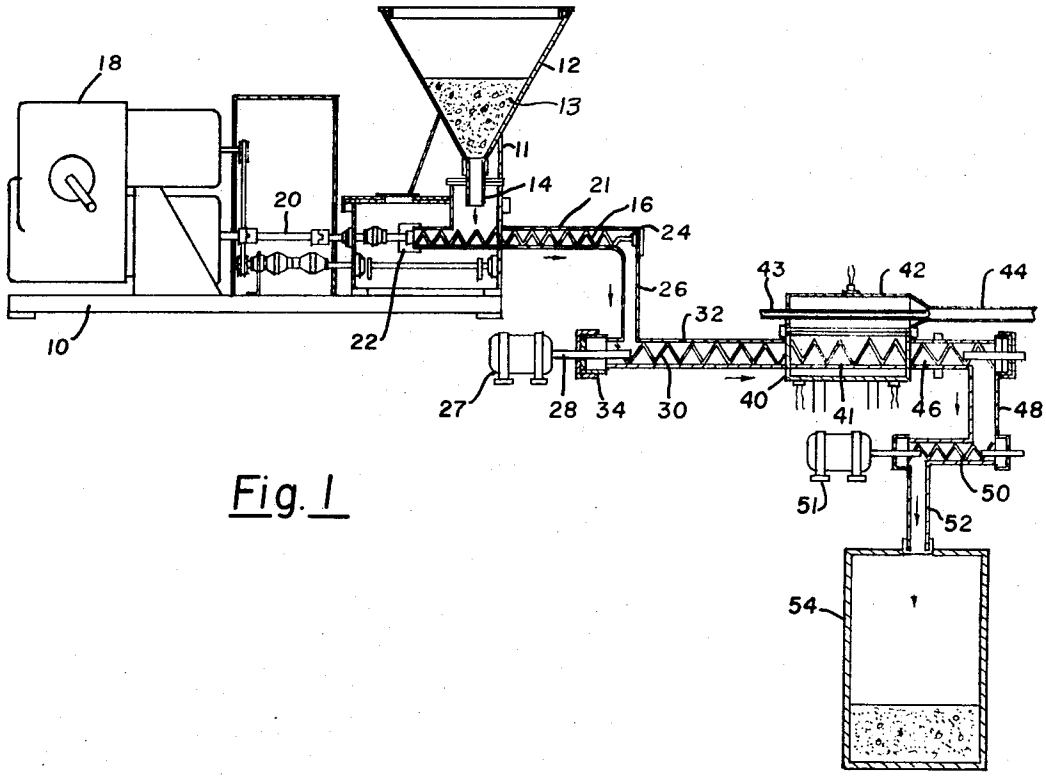

Fig. 1

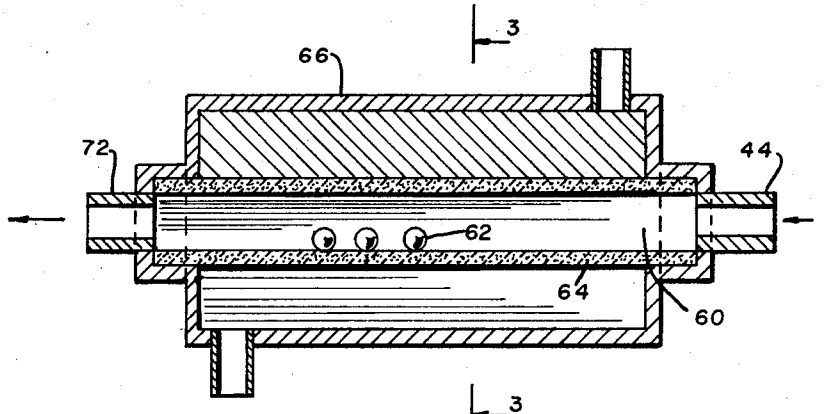

Fig. 2

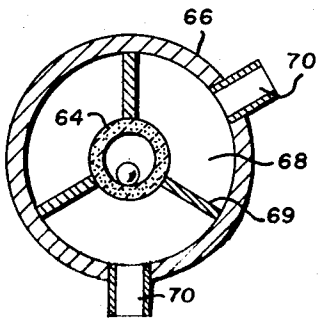

Fig. 3

INVENTOR.
PETER L. FLEISCHNER
BY
Ralph R. Roberts
AGENT

United States Patent Office 3,679,463 Patented July 25, 1972

3,679,463

APPARATUS AND METHOD FOR CONTINUOUSLY DEPOSITING BERYLLIA THROUGH VAPORIZATION OF A BASIC FORMATE

Peter L. Fleischner, New York, N.Y., assignor to National Beryllia Corporation, Haskell, N.J.

Filed June 8, 1970, Ser. No. 44,344
Int. Cl. C23c 11/00
U.S. Cl. 117—107.2 R 7 Claims

ABSTRACT OF THE DISCLOSURE

An apparatus and method for vaporizing a basic formate of beryllium by continuous means in which the beryllium basic formate is mixed with a granular inert carrier material such as sand and as an aggregate is fed from a storage hopper through a closed screw conveyor system through a heating zone whereat the basic formate of beryllium is vaporized and in a vaporized condition is delivered to a chamber in which the beryllium basic formate is thermally decomposed into beryllia and is deposited on a substrate. The granular inert material and unvaporized basic formate is discharged to a closed receiving hopper for reprocessing and the like.

BACKGROUND OF THE INVENTION

Field of the invention

With reference to the classification of art as established in the United States Patent Office, the art to which the present invention pertains is found generally in the class entitled "Metallurgical Apparatus," and the subclasses thereunder of "treating solid metal with heat;" "with gas heater;" "heating furnace;" and "retort." Also of significance is the class of "Coating: Processes and Miscellaneous Products," and the subclasses thereunder of "coating by vapor, gas, mist or smoke," as by "metal coating" and as "by decomposition of metallic compound." Of possible significance is the class entitled "Gas Separation," and the subclass thereunder of "metals or their compounds." Also of possible interest is the class entitled "Metallurgy," and the subclass thereunder of "alloys of beryllium."

Description of the prior art

The particular physical qualities of BeO has made the dense coating of substrates with BeO highly desirable and commercially used. One method or process for producing such a dense coating of BeO is disclosed in U.S. Pat. No. 3,484,278 which issued Dec. 16, 1969, with Tabel and Hoekstra as inventors. As seen in FIG. 1 of this patent, the reduction to practice and teaching discloses known laboratory equipment such as a bell jar. The resulting coating of substrates is satisfactory as to its composition, structure and use, but from an economical standpoint the labor cost per piece exceeds the desired practical level. It is also to be noted that all exposed surfaces within the bell jar **10** are given substantially the same amount of deposition of BeO. On the substrates to be plated this is desirous; on the equipment including the inside of the bell jar this is not only a waste, but often requires removal before the equipment can again be used. The information and description provided in U.S. Pat. No. 3,484,278 above-identified is incorporated by reference into this application.

Conveying systems are of course well known and certain processing systems are representatively shown in U.S. Pat. No. 3,176,970 to Holcroft of Apr. 6, 1965 and in U.S. Pat. No. 3,497,914 to Tybout of Mar. 3, 1970. In these and other systems, insofar as is known, there is no showing of a closed conveyor system wherein in one

portion there is provided a heating region whereat the metal is vaporized and collected and then is conducted or transported to a deposition chamber wherein the wall is made porous so as to enable passage therethrough of pressurized dry air and the like. This pressurized gas is forced inwardly through the wall so that the vaporized beryllium basic formate is prevented from coming in contact with the wall or walls of the deposition chamber.

Deposition chambers for gas or vapor plating are representatively shown in U.S. Pat. No. 2,905,573 to Marvin issuing Sept. 22, 1959; U.S. Pat. No. 2,921,868 to Berger issuing Jan. 19, 1960, and in U.S. Pat. No. 2,929,739 to to Breining et al., issuing Mar. 22, 1960. These and other patents show tubular inner chambers but, insofar as is known, the use of pressurized dry air or gas through a porous inner wall of a chamber to maintain the inner wall surface in an uncoated condition is novel and provides a means for commercial coating of substrates with dense beryllia.

SUMMARY OF THE INVENTION

The present invention may be summarized at least in part with reference to its objects. It is an object of this invention to provide, and it does provide, an apparatus and method for continuously producing a beryllium basic formate vapor by heating an aggregate containing a portion of basic formate of beryllium as the aggregate is transported by a screw conveyor through a heating zone. This formate vapor is collected in a hood chamber and from this chamber is fed through a conductor or pipe to a chamber in which the substrates to be coated are placed.

It is a further object of this invention to provide, and it does provide, an apparatus and method for producing and depositing beryllia on substrates in which a basic formate of beryllium is mixed with an inert granular material such as sand and by and in a closed conveyor system is brought to and through a heating zone whereat the basic formate of beryllium is vaporized and in a gaseous condition is fed to a deposition chamber in which substrates are placed for thermally decomposing beryllium basic formate to provide hard dense beryllia deposits on a substrate heated to a temperature of 250–600 degrees centigrade. The inner walls of the deposition chamber are of a porous construction to the extent that dry air, gas and the like may be forced through the porous wall to provide a gas liner or curtain inhibiting the deposition of the beryllia on the inner surface of the chamber walls.

In the apparatus and method to be more fully described hereinafter, a beryllium basic formate is mixed with a granular inert material such as sand. The mixture is preferably about five to ten percent basic formate by weight with the balance an inert carrier material such as sand. From a hopper, this mixture is discharged to a screw conveyor which is sealed except for the inlet from the hopper and an outlet into a sealed vertical discharge chute to the inlet end of yet another sealed screw conveyor. Towards the discharge end of this conveyor, the trough walls are made porous and are enclosed in a heat zone or chamber provided to locally heat this area to one hundred fifty to three hundred degrees centigrade. This temperature is sufficient to vaporize the basic formate of beryllium at an eighty to ninety percent efficiency. The vapor passes through the porous passageways while residue granular ash and sand are discharged at the end of the conveyor into a sealed chute and into another sealed conveyor to discharge into another sealed chute and sealed hopper where it is accumulated for disposal or reprocessing.

The vaporized basic formate of beryllium is collected in an aspirating chamber above the conveyor and from this chamber is fed by a tubular conductor to a deposi-

tion chamber having an inner wall of a porous construction. The vapor is fed to and into this inner chamber so as to be brought in way of the substrates to be coated. The outer portion of the deposition chamber is fed with pressurized dry air or the like which is permitted to flow in a determined amount through the porous wall so as to push the vaporized basic formate of beryllium delivered into the inner chamber from any plating contact with the wall of the inner chamber.

INTENT OF THE DISCLOSURE

Although the following disclosure offered for public dissemination is detailed to insure adequacy and aid in understanding of the invention, this is not intended to prejudice that purpose of a patent which is to cover each new inventive concept therein no matter how it may later be disguised by variations in form or additions of further improvements. The claims at the end hereof are intended as the chief aid toward this purpose, as it is these that meet the requirement of pointing out the parts, improvements or methods in which the inventive concept is found.

There has been chosen a specific embodiment of the apparatus for continuously vaporizing a basic formate of beryllium and through a conductor feeding this vapor to a preferred deposition chamber for plating substrates with dense BeO. This specific embodiment has been chosen for the purposes of illustration and description as shown in the accompanying drawings.

BRIEF DESCRIPTION OF THE DRAWING

FIG. 2 represents an enlarged sectional side view of a a preferred conveying and vaporizing apparatus of this invention;

FIG. 2 represents an enlarged sectional side view of a deposition chamber adapted for transmitting a vaporized basic formate of beryllium into the inner chamber for depositing dense BeO on a substrate; and

FIG. 3 represents a sectional view taken on the line 3—3 of the chamber of FIG. 2.

In the following description and in the claims various details will be identified by specific names for convenience; these names, however, are intended to be generic in their application. Corresponding reference characters refer to like members throughout the several figures of the drawing.

The drawing accompanying, and forming part of, this specification discloses certain details of construction for the purpose of explanation of the broader aspects of the invention, but it should be understood that structural details may be modified in various respects without departure from the concept and principles of the invention and that the invention may be incorporated in other structural forms than shown.

DESCRIPTION OF THE PREFERRED EMBODIMENT

Referring now to the schematic side view of FIG. 1 it is to be noted that a conveying and vaporizing apparatus includes a base **10** upon which a support **11** carries a hopper **12** within which is stored an aggregate **13** consisting of a basic formate of beryllium and a granular inert carrier material such as sand. This hopper is provided with a discharge chute **14** disposed to control the flow of aggregate material from hopper **12** to a screw conveyor **16** driven by a motor **18** through coupling shaft **20**. The housing **21** for the conveyor **16** is sealed with the rear end of the conveyor housing **21** having a closed end member **22** to prevent any gas backup or dust from the conveyor **16** to and out the rear end of the conveyor as beryllium compounds and their vapors are highly toxic. A bearing **24** supports the conveyor **16** and is mounted on a closed right end of the housing **21**. The screw **16** in this conveyor is a choked auger type designed so that the choked auger fills the flutes of the screw to act as a gas seal to prevent any vapor from flowing back and into the hopper. When the aggregate in the conveyor reaches the discharge outlet at the right end, the housing **21** is substantially full. Attached to the discharge end of the conveyor **16** is a drop chute **26** through which the aggregate is fed downwardly to yet another screw conveyor also of a closed type. This conveyor is driven by means of a motor **27** through shaft **28** coupled to the shaft of conveyor **30** disposed to carry the aggregate rightwardly as indicated by the arrow. The housing **32** has its left or drive end particularly closed or sealed wtih a cap end **34** adapted to prevent any escape of any vapor or dust to and out the conveyor. Intermediate the ends of the conveyor **30** there is provided a closed heating chamber **40** which is sealed to housing **32**. In this chamber the aggregate containing the basic formate of beryllium is heated to a determined degree which is contemplated to be one hundred fifty to three hundred degrees centigrade. This aggregate is transported by screw **30** so as to be fed through this heating chamber **40** with the beryllium basic formate heated sufficiently to vaporize as described in U.S. Pat. No. 3,484,278 above-identified. The vaporized beryllium basic formate is collected in an upper chamber **42** from whence it is conducted by a duct **44**. The conveyor screw **30** carries the aggregate into the chamber **40** wherein the screw is continued but the housing **32** is terminated and becomes an open top trough **41**. The trough **41** is preferably constructed of porous metal through which heated dry air is passed to vaporize and transport the beryllium basic formate from the aggregate passing along the screw conveyor. The metal trough **41** opens into upper chamber **42** which is an aspirating chamber with duct **43** carrying pressurized gas or air which is discharged into the vapor conveying duct **44**. The aspirating chamber creates a negative pressure above the trough **41** so that the subliming material as it is volatilized is drawn to duct **44**.

After the basic formate of beryllium has been vaporized in heating chamber **40** the residue containing some organic ash with the balance mainly sand or like inert material is caused to be moved into the closed conveyor **46** and to drop through discharge chute **48** into a return screw conveyor **50** of closed construction and driven by motor **51**. The aggregate is delivered for discharge into a drop chute **52** and then into closed accumulating container **54** where it is retained in a sealed condition until disposal or reclamation is to be made. Like conveyor **16** the return screw conveyor **50** is of the choked auger type which receives the residue from chute **48** and before discharge through chute **52** the residue fills the conveyor housing. The filled flutes of the choked auger act as a gas seal to prevent any vapor from flowing into accumulating container **54**.

Deposition chamber of FIGS. 2 and 3

Referring now to FIGS. 2 and 3 there is shown a deposition chamber **55** where vaporized basic formate of beryllium from the heating chamber **40** is fed through duct **44** into an inner chamber area **60** in which substrates **62** to be plated are placed. An inner wall **64** is preferably of a porous composition and in the preferred embodiment is shown as a tube. Through this wall dry air and/or any of several gases such as nitrogen, oxygen and the like may be caused to flow under the influence of a determined amount of pressure. Inner wall **64** is supported and enclosed by an outer housing **66** having end walls so disposed as to provide a closed gas chamber area **68**. Baffles or partitions **69** are attached to and are carried by outer housing **66** so as to provide conveying passageways for the controlled flow of gas in chamber **68**. The baffles may be in the nature of plates radially arranged in a longitudinal array as in FIG. 3 or, if desired, may be helically arranged or may be arranged in other combinations or configurations providing for a desired controlled gas flow. These baffles may be contoured

on their inner faces to provide a support for tube **64**. One or more inlets **70** are provided in outer housing **66** so that the pressurized dry air, gas and the like can be fed to the several closed gas chamber areas. An outlet **72** is provided at the end of inner wall **64** which is opposite duct **44** providing the inlet for the vaporized basic formate of beryllium to the inner chamber.

Use and operation

In the apparatus as shown in FIGS. 1 through 3 and above-described, an initial aggregate of basic formate of beryllium is mixed with an inert granular material such as sand. The inert material acts as a carrier for the basic formate and for the granular ash after eighty to ninety percent of the basic formate of beryllium has been vaporized. The system is sealed at one end by the choked conveyor **16** so that the vapor flow will be caused to go into duct **44** rather than back into the hopper, and so that no dust or vapor can escape to endanger the operator of the equipment. This aggregate is stored in hopper **12** from which it is fed through a metering discharge chute **14** to a first conveyor **16**. This conveyor is sealed as to its housing and the flow of aggregate in the conveyor is sealed by a high level choked auger to prevent any back flow of heated air, vapor and the like from subsequent operations.

From conveyor **16** the aggregate is fed through chute **26** to the conveyor **30** which is driven by motor **27** and carries the aggregate into the heating zone of chamber **40**. This portion of the conveyor is disposed to spread and agitate the aggregate so that as it is brought into the porous heated trough **41** it is heated as evenly as possible. The vaporized basic formate of beryllium is drawn into chamber **42** and is then fed to deposition chamber **55** through flue conductor **44**. The residue is conveyor **30** is fed into conveyor section **46** from whence it is discharged into chute **48** into return conveyor **50**. This conveyor is a choked auger preventing any gas flow to subsequent discharge operations and is of a length and size disposed to cool the residue a determined amount before it is discharged into chute **52** and accumulating container **54**.

The vaporized basic formate of beryllium fed to deposition chamber **55** is brought to and into the inner chamber **62** which is at a temperature of two hundred fifty to six hundred degrees centigrade. To prevent the deposition of BeO on the inner surface of wall of tube **64** the vaporized basic formate of beryllium is urged from engagement with the wall by means of dry air, nitrogen, oxygen or other gaseous mixtures. This flow through the wall provides a gas flow normal to the inner wall of tube **64** tending to keep the vaporized basic formate from engagement with the wall. That vaporized beryllium basic formate not deposited on the heated substrates **62** in the inner chamber is fed with the gas flowing through the wall to and out exit **72** to a reclaiming process or disposal.

Elecrtronic sensors and controls providing determined rates of flow of the aggregate and residue and heating temperatures for both heating chamber **40** and deposition chamber **55** as well as many other controls have been omitted from the above drawing and description as these are known components whose selection and use are determined by the circumstances of the particular operation and result. Although the conveyors **16** and **50** are preferably of the choked auger construction it is also to be noted that conveyors with metering bulkhead constructions may be used to provide the desired vapor seal of the conveyor.

The apparatus and method above-described has been reduced to practice and extensively and successfully used in vaporizing beryllium basic formate. The basic disclosure of the sublimation of a solid chemical compound as is beryllium basic formate is shown in U.S. Pat. No. 3,484,278 but the continuous method and apparatus of this invention may be used for other solid sublimable chemical compounds. Examples of said other solid sublimable chemical compounds are beryllium acetyl acetonate and acetylacetonato (1,5-cyclooctadiene) iridium. Any oxide of metal or metal alloy can be deposited by the vapors of organo metallic compounds such as metal alkylates, carboxylates and phenolates. Further compounds are identified in a book entitled, "Decomposition of Organo Metallic Compounds to Refractory Ceramics, Metals and Metal Alloys." Edited by K. S. Mazdiyasni, published by the University of Dayton Press (Dayton, Ohio), copyright 1968.

Terms such as "left," "right," "up," "down," "bottom," "top," "front," "back," "in," "out" and the like are applicable to the embodiment shown and described in conjunction with the drawing. These terms are merely for the purposes of description and do not necessarily apply to the position in which the apparatus for continuously producing and depositing vaporized basic formate of beryllia may be constructed or used.

The conception of the vaporization and deposition apparatus and its application is not limited to the specific embodiment shown but departures therefrom may be made within the scope of the accompanying claims and without sacrificing its chief advantages and protection is sought to the broadest extent the prior art allows.

What is claimed is:

1. The method of producing a determined continuous supply of a vaporized solid sublimable organo-metalloid compound for delivery to a deposition chamber, said method including the steps of: (a) providing and storing in closable hopper a supply of aggregate which includes a solid sublimable organo-metalloid compound and a granular inert carrier material; (b) receiving and transporting a controlled flow of said aggregate through a closed first conductor; (c) slowing the flow of aggregate through a portion of said closed first conductor so as to fill with aggregate substantially all the available conducting passageway at this portion of the conductor and provide thereby a seal to the unwanted flow of vapor through the conductor; (d) receiving and transporting the aggregate through a closed second conductor and to and through a heating chamber; (e) passing heated gas to, through, and around the aggregate so as to vaporize the solid sublimable organo-metalloid compound and remove the vaporized material from the aggregate; (f) collecting the vaporized solid sublimable organo-metalloid compound in a chamber and transporting the vapor from this chamber to a deposition chamber to deposit a metal alloy or metal oxide; (g) receiving and transporting the residue from the heating chamber through a closed third conductor; (h) slowing the flow of residue through a portion of this closed third conductor so as to fill with residue substantially all the available conducting passageway and provide thereby a seal to the unwanted flow of vapor with the residue; and (i) discharging the residue from the third conductor to an accumulating closed container.

2. The method of producing a determined supply of a vaporized solid sublimable organo-metalloid compound as in claim **1** in which the passing of heated gas through the aggregate includes passing the heated gas through a porous metal wall providing the conveyor housing portion of the heating chamber.

3. The method of producing a determined supply of a vaporized solid sublimable organo-metalloid compound as in claim **1** in which the collecting of the vaporized solid sublimable organo-metalloid compound is in a collection chamber and includes the step of causing a differential of pressure to be developed between the heating chamber and the collection chamber with the collection chamber operated at the lower pressure.

4. The method of producing a determined supply of a vaporized solid sublimable organo-metalloid compound as in claim **3** in which the pressure differential is achieved

by aspiration and results in creating a negative pressure in the collection chamber.

5. The method of producing a determined supply of a vaporized solid sublimable organo-metalloid compound as in claim 1 in which the vaporized solid sublimable organo-metalloid compound from the collection chamber includes the step of passing the vaporized solid sublimable organo-metalloid compound into the heated inner chamber of the deposition chamber for the purpose of depositing the solid sublimable organo-metalloid compound on a heated substrate.

6. The method of producing a determined supply of a vaporized solid sublimable organo-metalloid compound as in claim 5 in which the wall of the inner chamber is porous and the depositing of the solid sublimable organo-metalloid compound on a substrate includes the step of passing a flow of heated dry air and the like through the porous wall so as to prevent the deposition of the solid sublimable organo-metalloid compound on the inner surface of the inner wall of the deposition chamber.

7. The method of producing a determined supply of a vaporized solid sublimable organo-metalloid compound as in claim 6 in which the inner wall of the deposition chamber is enclosed by a gas chamber into which the

heated dry air is fed and there are baffles disposed therein providing for the step of metering and directing the flow of heated dry air and the like through the porous inner wall so as to guide and direct the flow of vaporized solid sublimable organo-metalloid compound over the substrate.

References Cited

UNITED STATES PATENTS

2,422,874	6/1947	Zenlea	23—264 X
1,409,338	3/1922	Fenton	23—294
2,793,914	5/1957	Gardeniers et al.	302—50
3,104,020	9/1963	Klapp	302—50 X
3,484,278	12/1969	Taebel et al.	117—106
3,176,970	4/1965	Holcroft	266—4
3,497,914	3/1970	Tybout	18—12
2,929,739	3/1960	Breining et al.	117—107
1,987,282	1/1935	Comte	23—264
3,449,159	6/1969	Baldi	117—107.2
3,414,428	12/1968	Kelly et al.	117—107.2

RALPH S. KENDALL, Primary Examiner

U.S. Cl. X.R.

117—66, 106 R; 118—48; 302—50