GEORGE E. MORRIS & C. W. GREGORY.

Improvement in Railway-Rail Joints.

No. 115,630. Patented June 6, 1871.

Fig. 1.

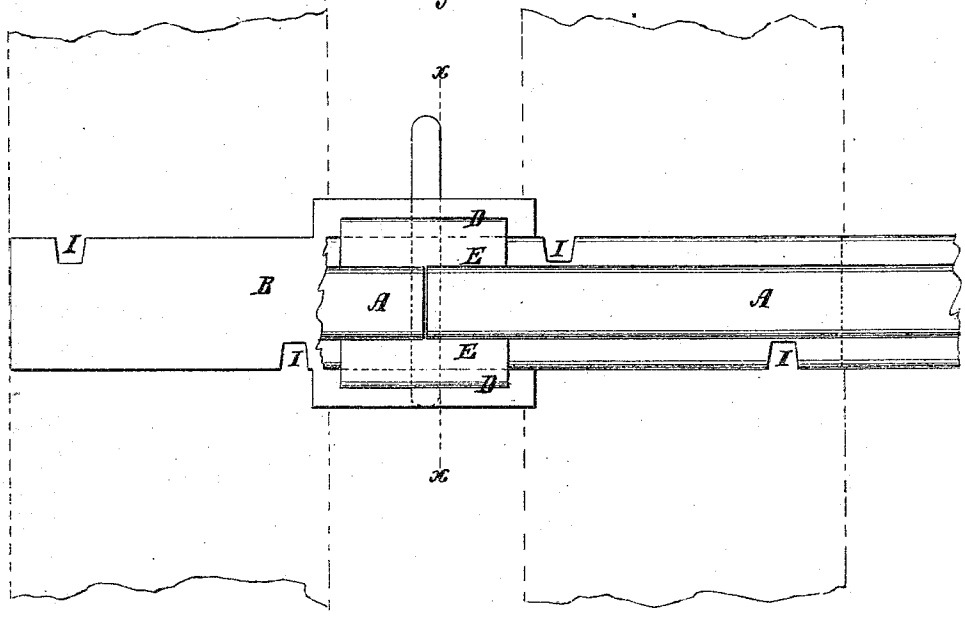

Fig. 2.

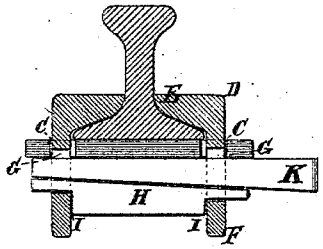

Witnesses:
A. Bennenendorf
L. L. Mabee

Inventor:
G. E. Morris
C. W. Gregory
Per Munn & Co
Attorneys.

AM. PHOTO-LITHOGRAPHIC CO. N.Y. (OSBORNE'S PROCESS)

UNITED STATES PATENT OFFICE.

GEORGE E. MORRIS AND CHARLES W. GREGORY, OF DANVILLE, ILLINOIS.

IMPROVEMENT IN RAILWAY-RAIL JOINTS.

Specification forming part of Letters Patent No. 115,630, dated June 6, 1871.

To all whom it may concern:

Be it known that we, GEORGE E. MORRIS and CHARLES W. GREGORY, of Danville, in the county of Vermilion and State of Illinois, have invented new and useful Improvements in Rail-Joints; and we do hereby declare that the following is a full, clear, and exact description thereof, which will enable others skilled in the art to make and use the same, reference being had to the accompanying drawing forming part of this specification.

This invention relates to improvements in joints for railroad rails; and

It consists in a long flat plate having vertical slots, one on each side, near the center, two clips with upper ends catching on the base of the rail, and lower parts projecting down through the slots in the plate, the latter being placed under the rails; a gib for holding the ends of the clips below the plate from being forced together, and a key for clamping the clips and the plate together, said key passing under the plate transversely and through holes in the clips, and the plate resting at the ends on the ties, all as hereinafter more fully described.

Figure 1 is a plan view of our improved joint, and Fig. 2 is a transverse section on the line *x x* of Fig. 1.

Similar letters of reference indicate corresponding parts.

A represents the ends of the rails, and B the plate which is to be placed under them. This plate is made long enough to extend each way from the joint between the rails, which is intended to be between the ties to rest at the ends on the said ties. Near the center it is made wider than the base of the rails, and has two long vertical slots, C, one near each edge, a space being left between nearly as wide as the base of a rail. D represents clips of wrought metal, with upper ends E hooking over the base of the rail, while the parts F extend down through the slots C. These parts F have holes G through them, below the plate B, in which a gib, H, with shoulders, I, is first inserted, as shown, so that the said parts cannot be moved toward each other, and then a key, K, is driven in between the bottom of the plate and the gib to clamp the rails and plate firmly together and make a strong splice or joint, the clips being arranged over the joint between the ends of the rails. I propose to employ a split key, having the ends so shaped that it will be prevented from working out. The plate B may have notches I on the edges of the part resting on the ties, coinciding with the notches in the edges of the bases of the rails, for reception of the spikes used to hold the rails down and to prevent end movement.

The several parts forming this apparatus for joining the ends of the rails are all very simple in form, and may be made in wrought metal, either by rolling or stamping, making a very cheap, simple, and efficient joint.

Having thus described our invention, we claim as new and desire to secure by Letters Patent—

The double-slotted plate B and the two slotted clips D, having upper ends E and slotted lower ends F, combined, as described, with a shouldered inclined gib, H, and key K, for the purpose specified.

GEORGE E. MORRIS.
CHARLES W. GREGORY.

Witnesses:
JOHN J. PARTLOW,
WILLIAM A. PAYTON.