June 13, 1950 S. W. BAIER ET AL 2,511,395

PROCESS FOR THE ELECTRODEPOSITION OF TIN ALLOYS

Filed March 29, 1945

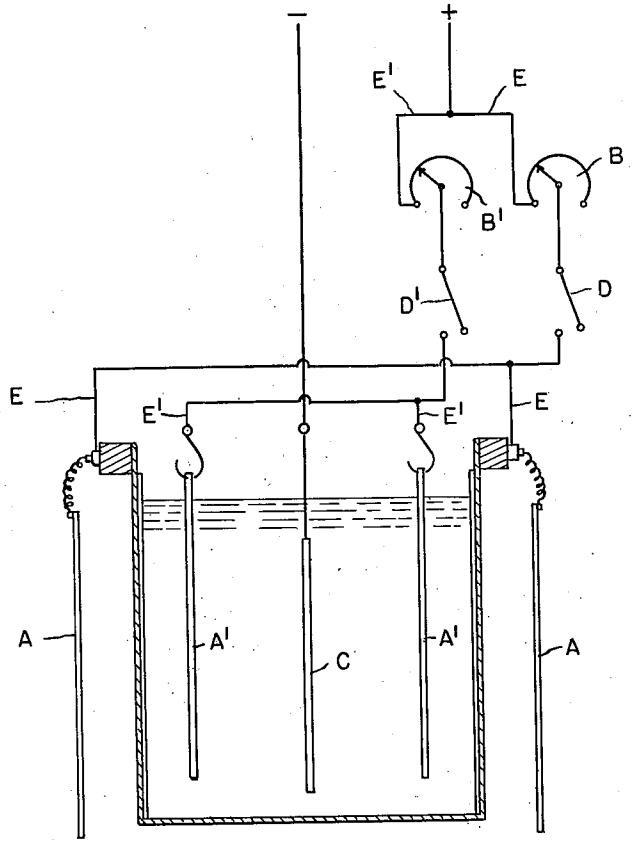

INVENTORS
SYDNEY WALTER BAIER
DUNCON JAMES MacNAUGHTAN
BY Whittemore, Hulbert & Belknap
ATTORNEYS

Patented June 13, 1950 2,511,395

UNITED STATES PATENT OFFICE

2,511,395

PROCESS FOR THE ELECTRODEPOSITION OF TIN ALLOYS

Sydney Walter Baier and Duncan James Macnaughtan, London, England, assignors to The City Auto Stamping Company, Toledo, Ohio, a corporation of Ohio

Application March 29, 1945, Serial No. 585,576
In Great Britain February 20, 1939

11 Claims. (Cl. 204—44)

1

This invention relates to a process for electrodepositing alloys. More particularly, it is concerned with the electrodeposition of alloys of tin with such metals as copper, cadmium, zinc and antimony, and it is especially concerned with the electrodeposition of bronze alloys containing in excess of 30% of tin.

Although the electrodeposition of tin alloys has been attempted by numerous investigators, heretofore there has been no commercially satisfactory method for obtaining the desired deposit. This is especially true in the case of alloys containing an appreciable amount of tin, for example, in excess of 30% of tin.

This application is a continuation-in-part of our application, Serial No. 319,978, filed February 20, 1940, now abandoned. Attention is also directed to the copending application of Sydney Walter Baier, Serial No. 362,667, filed October 24, 1940, now Patent No. 2,397,522 issued April 2, 1946, wherein there is disclosed and claimed a modification of the present invention.

Batten and Welcome, in U. S. Patents Nos. 1,970,548 and 1,970,549, have proposed a method for the deposition of copper-tin alloys containing from 10 to 25% of tin. However, in the use of this method the conditions must be rigorously controlled in order to maintain the tin-copper ratio in the desired range. The process uses cast bronze anodes which, in some cases, tend to be rather brittle and somewhat difficult to handle. Difficulty is also experienced in obtaining balanced anode and cathode efficiencies. There is also a tendency for the formation of passive anodes unless the anode composition is restricted to certain rather limited ranges.

Bechard, Journal of Electrodepositor's Technical Society, volume XI, 1936, has proposed a method for producing a bronze electroplate using tin and copper anodes, with the provision of insoluble anodes in an attempt to maintain the bath in operating condition. Although this bath is capable of operation for a short period of time, it is not adaptable for commercial electroplating; on extended use, the deposits tend to become spongy and nonadherent.

In the electrodeposition of tin from alkaline baths, it is well known that the presence of appreciable amounts of tin in solution as divalent or stannous tin causes the deposit to become rough and nonadherent. We have found that this problem is much more serious in the electrodeposition of alloys containing appreciable amounts of tin. The presence of very small amounts of divalent or stannous tin in the solution is sufficient to cause plating difficulties.

2

We have also found that, in the electrodeposition of tin alloys whether alloy anodes or separate anodes of tin and copper are used, there is a definite tendency for the tin constituent to dissolve in the form of divalent salts, for example, as sodium stannite, rather than in the form of quadrivalent salts, for example, as sodium stannate. Although this tendency is sometimes negligible in the deposition of alloys containing low tin contents, it becomes quite marked when alloys of higher tin contents are deposited, for example, in alloys containing in excess of 30% of tin, and prevents the production of commercially acceptable plates. Also, the maintenance of balanced anode and cathode efficiencies is much more important in alloy plating baths than when single metals are deposited. With the latter, a difference between the anode and cathode efficiency is not always rapidly reflected in the character of the deposit; often considerable strengthening or weakening of the plating bath has but little effect on either the efficiency of the deposit or the character of the deposit. In alloy plating baths, the ratio of metals in the plating solution is generally entirely different from the ratio in the deposit. Consequently, differences between anode and cathode efficiencies rapidly cause an alteration in the metal ratio in the solution, which is soon reflected by a change of the composition of the deposits. For example, a tin-copper alloy containing 10% of tin may be deposited from a bath containing about 30 to 35% of tin. With this bath, a low anode efficiency would soon cause the bath to get depleted in copper, leading to a higher and higher percentage of tin in the alloy deposits.

It is, therefore, a primary object of our invention to provide a commercially practicable method for the electrodeposition of tin alloys.

Another object of this invention is to provide a method of maintaining a tin alloy plating bath in operating condition.

Still a further object is to provide a method of producing adherent electrodeposits of a tin alloy without the use of insoluble anodes.

Yet another object of this invention is to provide a method of producing alloys of tin and copper, cadmium, zinc, and antimony, containing in excess of 30% of tin, under conditions which are practicable for commercial operation.

Yet a further object of our invention is to provide a commercially practicable method for the electrodeposition of tin alloys using an anode system with which solution of the tin in the divalent form is prevented.

Other and further objects of our invention will be apparent from the following description and from the drawing wherein, the figure shows an electrical diagram for an apparatus for practicing the process of the invention.

For the purposes of illustration, our invention will be described primarily in relation to its use in the production of bronze alloys; however, it is to be understood that the scientific principles involved in the process are adaptable with only minor changes to the electrodeposition of other alloys, such as alloys of tin with cadmium, zinc and antimony.

We have discovered that commercially satisfactory tin alloys can be electrodeposited by the use of the proper electrolyte in which is maintained the desired copper-tin ratio and in which the tin is maintained in the stannic form by the use of a double anode circuit as shown in the drawing. The desired control is achieved by passing a selected portion of the current through the tin anodes A, in one branch E of the anode circuit and the balance through the copper anodes A' in the other branch E' of the anode circuit so that there is maintained on the tin anode a surface condition which causes the anode to dissolve in the stannic or quadrivalent form. Inasmuch as this surface condition is not subject to rigorous definition, it will be referred to herein as an electroconductive surface film. Usually this film is pale yellow or greenish yellow in color; however, under certain conditions it may actually be invisible.

We have found that the electroconductive surface film may be formed in several ways. As a very desirable method, the film may be formed by subjecting the tin anode to a high current density in the electroplating solution. In general, a current density of at least 60 or more amperes per square foot is required. This may be accomplished by subjecting the tin anode to the required current density at the start of the plating operation; however, unless the bath temperature and the bath alkalinity are relatively low, sufficient stannous tin may be introduced before the current is applied to cause trouble in subsequent plating. As an alternative procedure, filming may be accomplished by gradually lowering the tin anodes into the plating solution after immersing the cathodes while they are both electrically connected to the current supply. It is significant that, if a portion of the electroconductive surface film is produced on the tin anode by the application of the necessary current density, the film tends to spread to the rest of the anode if the current density on the whole is maintained at or above the minimum required for maintaining the film. Alternatively, the electroconductive film may be produced by an electrolytic treatment in a separaty alkaline bath, or it may be produced by an oxidizing treatment, such as, for example, by treatment in an oxidizing solution or by an oxidizing heat treatment. This suggests that the film may be a tin oxide-containing coating. In any event, it is necessary to

introduce the tin anodes into the electroplating solution with the current on, in order to prevent the film from being dissolved by the action of the alkaline electrolyte.

Not only must the electroconductive surface film be formed on the tin anode, for example, by one of the methods outlined above, but it must also be maintained during the plating operation. We have discovered that the film can be maintained if provision is made that the current density on the tin anode is maintained in excess of at least 10 amperes per square foot during the entire time the tin anode is in contact with the solution.

The electrolyte composition required for our process is sufficiently broad that the process may be readily carried out on a commercial basis. Using, as an example, a bath for the deposition of a tin-copper alloy, we have found the following composition to be quite applicable.

	Grams/liter
Tin (as sodium stannate)	10–100
Copper (as sodium cuprocyanide)	2–20
Free cyanide (as sodium cyanide)	5–30
Rochelle salts	10–100
Free cautic sufficient to give a pH in excess of 13.	

However, for best commercial control and for best results, we prefer to use a bath within the following composition range:

	Grams/liter
Tin (as sodium stannate)	35–65
Copper (as sodium cuprocyanide)	5–15
Free cyanide (as sodium cyanide)	10–20
Rochelle salts	20–50
Free cautic sufficient to give a pH from 13.4 to 13.6.	

In general, we prefer to keep the ratio of tin to copper in the bath between about 2.5 and about 6.0.

If the free cyanide content becomes too low, the copper content of the deposit tends to increase and the copper anodes tend to become passive. Low free caustic content (low pH) tends to increase the tin content of the deposit and to lower the efficiency of the dissolution of the tin anodes, thereby causing depletion of the tin content of the bath. Although the presence of Rochelle salts, or sodium potassium tartrate, is not absolutely essential to proper operation of the process, its presence increases the brightness of the deposit and assists the anode dissolution. The effect of Rochelle salts is obtained, however, only in the absence of divalent tin.

In the event that traces of divalent tin are introduced inadvertently into the bath, they may be eliminated by oxidizing with sodium peroxide, hydrogen peroxide, or sodium perborate. Inasmuch as sodium peroxide reacts with the bath with almost explosive violence, additions of this material should be made cautiously.

In order to prevent deposition of tin by replacement on the tank walls, and subsequent dissolution as stannous tin, we prefer to use nonmetallic tanks, such as, for example, those with glass or rubber linings.

As mentioned hereinbefore, we employ separate anodes A and A' of tin and copper, respectively, and we prefer to use separate anode circuits so that the current throughout may be separately controlled. For example, the positive lead from the current supply may be divided into two branches E and E', each provided with separate rheostats B and B', or, alternatively, two sep-

arate sources of current may be used with their negative poles connected together The branch circuits E and E' also have the separate switches D and D' respectively which control the current to the anodes A and A'. The negative lead from the current supply is connected to the cathode C.

The use of separate circuits not only facilitates formation and maintenance of the electroconductive surface film, but it also allows the proportion of the tin and copper dissolving in the solution to be regulated at will.

In general, the current passing through the separate anode circuits is adjusted so that the proper ratio of copper and tin is maintained in the bath. For example, in the production of an alloy containing from 35 to 45% of tin, we have found it desirable to pass approximately 70% of the total current through tin anodes and 30% through the copper anodes.

The temperature of the bath during the plating operation should be maintained between 50° and 100° C., and, preferably, between 60° and 75° C. As the temperature approaches the upper limit, loss of cyanide becomes excessive, and, depending upon the composition of the solution and the plating conditions, there may be a tendency for the electroconductive surface film to be dissolved. Low temperatures tend to decrease the tin content of the deposit and also to decrease the efficiency.

Cathode current densities up to 100 amperes per square foot or more may be used; however, in general, we prefer to operate with a cathode current density of from 20 to 60 amperes per square foot. Below a current density of 20 amperes per square foot, rough deposits may be obtained. Current densities on the copper anode up to around 25 amperes per square foot are satisfactory, but, for best results, we prefer to maintain the current density at a value of from 10 to 20 amperes per square foot. When the current density is too high, the copper anode tends to become passive. As mentioned hereinbefore, a current density of at least 10 amperes per square foot must be maintained on the tin anode at all times it is in the plating solution. Although current densities in excess of 60 amperes per square foot are used to form the electroconductive surface film, the current density for plating should not greatly exceed 40 amperes per square foot, and we prefer to use a current density of from 15 to 20 amperes. With too high a current density, the tin anode tends to become passive. The tin anodes are preferably in the form of narrow strips in order to insure a fairly even distribution of the current density over the entire area.

In general, a voltage drop of from 2 to 3 volts is desired between the copper anode and the cathode, while the drop between the tin anode and the cathode should be from 3 to 5 volts. In any event, the voltage drop between the tin anode and the cathode should be at least 1 volt higher than that between the copper anode and the cathode. If the voltage on the tin anodes is too low, it is a sign that they have lost their film and are dissolving to form divalent tin. On the other hand, if the voltage on the copper anodes is too high, it is a sign that they are becoming passive.

If the difference in potential between the tin and the copper anodes becomes less than 1 to 1½ volts, and the copper anodes do not become passive, tin will be introduced into the bath as divalent tin. Tin deposits by chemical displacement from stannite solutions containing cyanide. Usually, the tin displaced in this way is very finely divided and nonadherent. It tends to be washed off the copper anode, to float about in the bath, and to become a continual source of stannite, or divalent tin, which can be removed only by filtration.

As has already been briefly discussed, the tin anodes must be removed from the solution at all times when the current is not passing between them and a cathode in order to prevent solution of the electroconductive surface film. The copper anodes should also be removed when they are not in operation because there is a tendency for tin to plate on the copper by replacement during inactive periods even with no divalent tin present and then to redissolve as divalent or stannous tin when the anode is again placed in operation.

In order to insure relative freedom from solution of tin in the divalent form, we have found the following routine for starting and finishing plating operations to be desirable:

Starting

1. Load work or dummy cathodes on cathode rod.
2. Insert copper anodes on anode bar.
3. Switch current onto copper anodes immediately after they are inserted.
4. Switch current on for tin anodes.
5. Lower tin anodes into the bath.

Re-loading

Unload plated articles one rack at a time and replace with fresh work so that a load is always maintained on the cathode bar.

Final unloading

1. Lift out tin anodes.
2. Switch off current from tin anodes.
3. Switch off current from copper anodes.
4. Remove copper anodes as soon as current is turned off.
5. Remove plated work.

As illustration of a few of the possible variations of our process, the following specific examples are given:

Example 1

A bath having the following composition was prepared:

	Grams/liter
Tin (as sodium stannate)	38
Copper (as sodium cuprocyanide)	7
Free sodium cyanide	15
Free sodium hydroxide	10

Using the principles hereinbefore disclosed, this bath produced an alloy electrodeposit containing 45% of tin and 55% of copper when operated at a bath temperature of 65° C. and at a current density of 25 amperes per square foot.

Example 2

The bath composition shown in Example 1 was altered by increasing the free sodium hydroxide to 20 grams per liter. When operated under the conditions shown in Example 1, this bath produced a deposit containing 35% of tin and 65% of copper.

Example 3

A bath having the composition shown in Example 1 was operated at a bath temperature of 75° C. and at a current density of 25 amperes

per square foot. An alloy deposit containing 52% of tin and 48% of copper was formed.

Example 4

The following bath composition was prepared:

	Grams/liter
Tin (as sodium stannate)	50
Copper (as sodium cuprocyanide)	12
Free sodium cyanide	15
Rochelle salts	37

Sufficient sodium hydroxide was added to bring the pH of the solution to 13.5. At a bath temperature of 65° C. and a current density of 30 amperes per square foot, a plate containing 16% of copper and 84% of tin was produced.

Example 5

An alloy containing 44% of tin and 56% of copper was formed at a bath temperature of 65° C. using a current density of 30 amperes per square foot, in an electrolyte containing the following constituents:

	Grams/liter
Tin (as sodium stannate)	38
Copper (as sodium cuprocyanide)	7
Free sodium cyanide	15
Rochelle salts	37

Free sodium hydroxide sufficient to give a pH of 13.4.

Example 6

A plating solution with the following composition was prepared:

	Grams/liter
Tin (as sodium stannate)	65
Copper (as sodium cuprocyanide)	13
Free sodium cyanide	5
Free sodium hydroxide	8

When this plating solution was operated at a temperature of 65° C. and at a current density of 25 amperes per square foot, a deposit containing 40% of tin and 60% of copper was obtained.

Example 7

The free sodium cyanide content of the bath shown in Example 6 was increased to 20 grams per liter. Under the conditions outlined in Example 6, this bath produced a deposit containing 61% of tin and 39% of copper.

Example 8

A plating solution with the following composition is prepared:

	Grams/liter
Tin (as sodium stannate)	46
Copper (as sodium cuprocyanide)	14
Free caustic soda	10
Free sodium cyanide	15
Rochelle salts	37

This solution has a pH value between 13 and 14 and is maintained in this range by additions of caustic soda if necessary.

The tin anodes A and copper anodes A' are connected to the positive pole of the plating dynamo or other current source through two separate rheostats B and B' and the current is regulated so that $\frac{7}{10}$ of the total passes through the tin anodes, and $\frac{3}{10}$ through the copper anodes which, at the anode efficiencies established, provides a ratio of 40 parts by weight of tin to every 60 parts of copper entering the solution. The temperature of the bath is maintained at about 65° C. and the area of the polarized tin anodes is maintained such that the current density at their working faces is substantially at 20 amperes per square foot, the area of the copper anodes is such that the current density does not exceed 20 amperes per square foot, while the current density at the cathode is, say, 30 amperes per square foot.

This, we believe, constitutes a new and novel process for the commercial electrodeposition of tin alloys. As mentioned hereinbefore, the method is particularly applicable for alloys containing in excess of 30% of tin.

Tin-copper alloys containing from 30 to 60% of tin have properties which fit them for many commercial applications. They are hard coatings with a hardness about halfway between normal nickel and chromium, and, therefore, not easily scratched. They are extremely easy to polish to a high luster, being similar in this respect to red bronze coatings which are noted for their ease of polishing. They are of a pleasing white color, free from both the yellowish tint associated with nickel and the blue tint of chromium. They are very resistant to corrosion and tarnishing. Higher tin contents, for example, in excess of 70% of tin give coatings similar to pure tin but somewhat harder. These alloys, in spite of their high tin content, are also very easy to buff to a high luster. The high tin alloys may prove quite useful in bearings and in similar applications.

Although our invention has been described primarily with reference to its use in connection with the production of tin-copper alloys, it will be readily apparent to one skilled in the art that the principles of the invention can readily be adapted for use in connection with the deposition of other tin alloys, for example, alloys of tin with cadmium, zinc and antimony.

It will also be understood that our invention is not intended to be limited to the particular details and conditions set forth as illustrations. Indeed, possible variations have been suggested in this disclosure as examples of how the basic features may be varied by those skilled in the art without departure from the spirit of the invention. In addition, for example, it will be readily apparent that potassium salts may be substituted for the sodium salts used in the illustrations.

What we claim as our invention is:

1. The process of electrodepositing an alloy of the class consisting of copper, cadmium, zinc composed essentially of tin and an alloying metal and antimony, from an aqueous electrolyte consisting essentially of 10 to 100 grams per liter of a soluble tin compound in stannate form and 2 to 20 grams per liter of a cyanide-soluble compound of said alloying metal, using a soluble tin anode, a separate soluble anode of said alloying metal, and a cathode upon which the alloy is deposited, comprising forming on the surface of said tin anode an electroconductive surface film and maintaining at all times when said tin anode is in contact with said electrolyte a substantially uninterrupted flow of current, the current density at the tin anode being from 10 to 40 amperes per square foot during the electrodeposition of said alloy, the current density of said anode of alloying metal being from 10 to 25 amperes per square foot and the cathode current density being 20 to 100 amperes per square foot.

2. The process of claim 1 in which the electroconductive surface film is formed by subjecting the tin anode to a current density at least 60

amperes per square foot for a sufficient length of time at the commencement of the plating operation to form said electroconductive surface film.

3. The process for the electrodeposition of a bronze composed essentially of copper and tin, comprising passing an electric current from a tin anode having an electroconductive surface film thereby causing anodic dissolution of the tin in the stannic form and from an anode of copper to a cathode through an aqueous electrolyte consisting essentially of 10 to 100 grams per liter of a soluble tin compound in stannate form and 2 to 20 grams per liter of a soluble cuprocyanide compound, and maintaining said film on the tin anode during electrodeposition by supplying a substantially uninterrupted flow of current during the entire time said tin anode is in the electrolyte, the current density at the tin anode being from 10 to 40 amperes per square foot during the electrodeposition of said bronze.

4. A process for the electrodeposition of a bronze composed essentially of tin and copper and containing at least 30% of tin which comprises passing controlled amounts of electric current in separate circuits from a tin anode having an electroconductive surface film causing anodic dissolution of the tin in the stannic form and from a copper anode to a cathode through an aqueous electrolyte consisting essentially of 35 to 65 grams per liter of a soluble tin compound in stannate form and 5 to 15 grams per liter of a soluble cuprocyanide compound, and maintaining said electroconductive surface film on said tin anode by supplying a substantially uninterrupted flow of current during the entire time said tin anode is in the electrolyte, the current density at the tin anode being from 10 to 40 amperes per square foot during the electrodeposition of said bronze.

5. A process for the electrodeposition of a bronze containing at least 30% of tin which comprises passing controlled amounts of electric current in separate anode circuits from a tin anode having an electroconductive surface film causing anodic dissolution of the tin in the stannic form and from a copper anode to a cathode comprising the article to be plated through an aqueous electrolyte consisting essentially of 35 to 65 grams per liter of alkali metal stannate, 5 to 15 grams per liter of alkali metal cuprocyanide, free alkali metal cyanide and free caustic sufficient to give a pH of at least 13, maintaining the dissolution ratio of the tin and the copper approximately the same as the deposition ratio on the cathode by controlling the amount of the electric current passed through said separate anode circuit, and maintaining said electroconductive surface film on the tin anode by supplying a substantially uninterrupted flow of current during the entire time said tin anode is in the electrolyte, the current density at the tin anode being from 10 to 40 amperes per square foot during electrodeposition of said bronze.

6. A process for the electrodeposition of bronze containing at least 30% of tin which comprises passing an electric current from a tin anode having an electroconductive surface film causing anodic dissolution of the tin in the stannic form and from a copper anode to a cathode through an aqueous electrolyte consisting essentially of 35 to 65 grams per liter of sodium stannate, 5 to 15 grams per liter of sodium cuprocyanide, free caustic soda, and free sodium cyanide, maintaining the pH of said electrolyte at least 13, and maintaining said electrolyte substantially free from divalent tin compounds by supplying a substantially uninterrupted flow of current from said tin anode during the entire time said tin anode is in the electrolyte and from said copper anode during the entire time said copper anode is in the electrolyte the current density at the tin anode being from 10 to 40 amperes per square foot and the current density at the copper anode being from 10 to 25 amperes per square foot, the cathode current density being 20 to 100 amperes per square foot.

7. The process of electrodepositing an alloy composed essentially of tin and an alloying metal of the class consisting of copper, cadmium, zinc and antimony, from an aqueous electrolyte consisting essentially of 35 to 65 grams per liter of a soluble tin compound in stannate form and 5 to 15 grams per liter of a cyanide-soluble compound of said alloying metal, using a soluble tin anode, a separate soluble anode of said alloying metal, and a cathode upon which the alloy is deposited, comprising forming on the surface of said tin anode an electroconductive surface film, passing a current from said anodes to said cathode and maintaining the current density during electrodeposition from 10 to 40 amperes per square foot at the tin anode, from 10 to 25 amperes per square foot at said anode of alloying metal, and from 20 to 100 amperes per square foot at the cathode.

8. The process of electrodepositing an alloy composed essentially of tin and an alloying metal of the class consisting of copper, cadmium, zinc and antimony, from an aqueous electrolyte consisting essentially of 35 to 65 grams per liter of a soluble tin compound in stannate form and 5 to 15 grams per liter of a cyanide-soluble compound of said alloying metal, using a soluble tin anode, a separate soluble anode of said alloying metal, and a cathode upon which the alloy is deposited, comprising forming on the surface of said tin anode an electro-conductive surface film, passing a current from said anodes to said cathode and maintaining the current density during electrodeposition from 15 to 20 amperes per square foot at the tin anode, from 10 to 20 amperes per square foot at said anode of alloying metal, and from 20 to 60 amperes per square foot at the cathode.

9. The process of electrodepositing a bronze alloy composed essentially of tin and copper from an aqueous electrolyte consisting essentially of 10 to 100 grams per liter of a soluble tin compound in stannate form and 5 to 15 grams per liter of a soluble cuprocyanide compound, using a soluble tin anode, a separate soluble copper anode and a cathode upon which the alloy is deposited, comprising forming on the surface of said tin anode an electroconductive surface film, passing a current from said anodes to said cathode, and maintaining the current density during electrodeposition from 10 to 40 amperes per square foot at the tin anode, from 10 to 25 amperes per square foot at the copper anode and from 20 to 100 amperes per square foot at the cathode.

10. The process of electrodepositing a bronze alloy composed essentially of tin and copper from an aqueous electrolyte consisting essentially of 35 to 65 grams per liter of a soluble tin compound in stannate form and 5 to 15 grains per liter of a soluble cuprocyanide compound, using a soluble tin anode, a separate soluble copper anode and a cathode upon which the alloy is

deposited, comprising forming on the surface of said tin anode an electroconductive surface film, passing a current from said anodes to said cathode, and maintaining the current density during electrodeposition from 15 to 20 amperes per square foot at the tin anode, from 10 to 20 amperes per square foot at the copper anode and from 20 to 60 amperes per square foot at the cathode.

11. The process of electrodepositing an alloy composed essentially of tin and copper and containing at least 30% tin from an aqueous electrolyte consisting essentially of 35 to 65 grams per liter of alkali metal stannate, 5 to 15 grams per liter of alkali metal cuprocyanide, free alkali metal cyanide and free caustic sufficient to give a pH of at least 13, using a soluble tin anode, a separate soluble copper anode, and a cathode upon which the alloy is deposited, comprising forming on the surface of said tin anode an electroconductive surface film, passing a current from said anodes to said cathode, and maintaining the current density during electrodeposition at approximately 20 amperes per square foot at the tin anode and at the copper anode and approximately 30 amperes per square foot at the cathode.

SYDNEY WALTER BAIER.
DUNCAN JAMES MACNAUGHTAN.

REFERENCES CITED

The following references are of record in the file of this patent:

UNITED STATES PATENTS

Number	Name	Date
1,918,605	Jones	July 18, 1933
1,919,000	Wernlund et al.	July 18, 1933
1,970,549	Batten et al.	Aug. 21, 1934

OTHER REFERENCES

Journal, Electrodepositor's Technical Society, vol. XI, (1935–36), pages 15–22; vol. XV (1939), pages 1–30.

Hansel, Z. Electrochem. 41 (1935), pages 314–321.

Baier, Publication No. 92 of International Tin Research and Development Counsel, page 5, April 1939.

Metals Handbook, 1939 edition, American Society for Metals, pages 1364, 1365.