2 Sheets—Sheet 1.

A. BURBANK.

LAMPS.

No. 194,071. Patented Aug. 14, 1877.

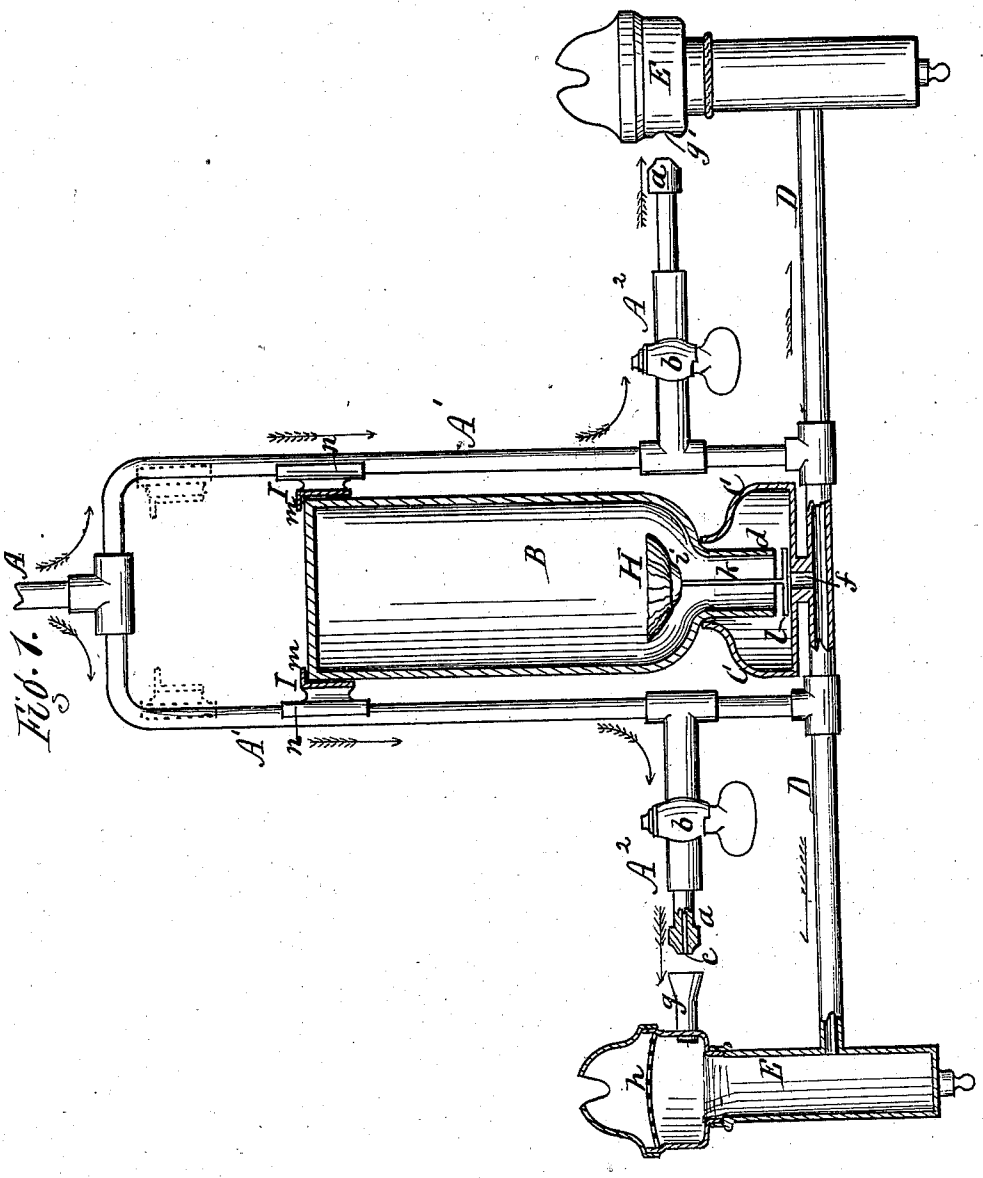

FIG. 1.

Attest
Jacob Spahn
R. E. White

Inventor.
Abner Burbank,
per R. F. Osgood,
Atty.

N. PETERS, PHOTO-LITHOGRAPHER, WASHINGTON, D. C.

2 Sheets—Sheet 2.

A. BURBANK.

LAMPS.

No. 194,071. Patented Aug. 14, 1877.

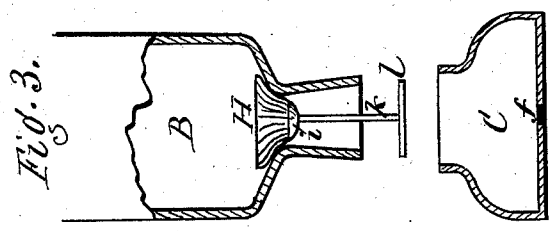

Fig. 3.

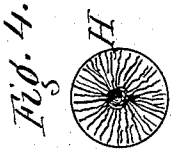

Fig. 4.

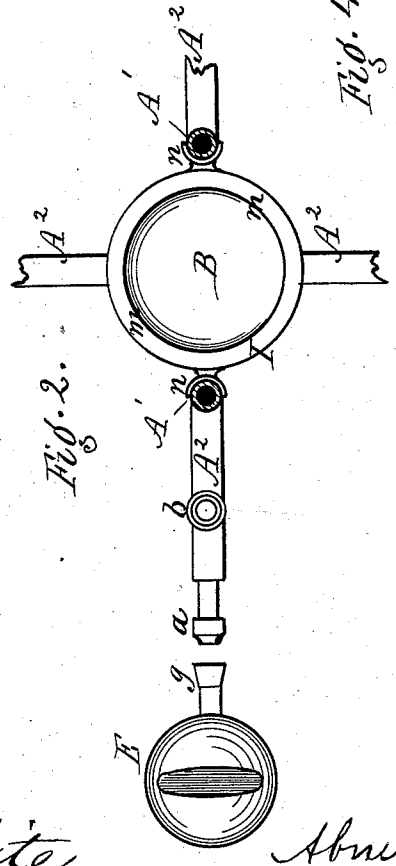

Fig. 2.

Attest.
R. E. White
Jacob Spahn

Inventor.
Abner Burbank,
per R. F. Osgood,
Atty.

N. PETERS, PHOTO-LITHOGRAPHER, WASHINGTON, D. C.

UNITED STATES PATENT OFFICE.

ABNER BURBANK, OF ROCHESTER, NEW YORK, ASSIGNOR OF TWO-THIRDS HIS RIGHT TO DOUGLASS HOVEY AND ETHAN A. CHASE, OF SAME PLACE.

IMPROVEMENT IN LAMPS.

Specification forming part of Letters Patent No. **194,071**, dated August 14, 1877; application filed May 25, 1877.

To all whom it may concern:

Be it known that I, ABNER BURBANK, of the city of Rochester, in the county of Monroe and State of New York, have invented a certain new and useful Improvement in Lamps; and I do hereby declare that the following is a full, clear, and exact description of the construction and operation of the same, reference being had to the accompanying drawings, in which—

Figure 1 is a side elevation of a hanging lamp or chandelier, showing my improvement. Fig. 2 is a section looking downward. Fig. 3 is a sectional elevation of part of the transparent receptacle and receiver separated. Fig. 4 is a plan of the flexible valve.

My improvement relates to that class of lamps in which injectors are employed for forcing a current of outside air into the blaze to support the combustion, dispensing with the use of chimneys. It also embodies the well-known principle of the German student lamp, adapted to a chandelier or bracket lamp.

The invention consists in the construction and arrangement of parts, hereinafter more fully described and definitely claimed.

A represents a pipe leading from the main pipes distributed through a building, or from any other supply. A^1 A^1 are branch pipes leading from this main pipe and extending downward and leaving space between them sufficient to receive the oil-receptacle and its receiver. A^2 A^2 are lateral pipes, extending out horizontally, and having at their outer ends the air-injecting nozzles *a a*, with cocks or cut-offs *b b* intermediate with the injectors and upright pipes. The air is forced through these pipes by any suitable blowing or forcing apparatus, in the direction indicated by the whole arrows in Fig. 1, and the nozzles are provided with small, fine passages *c c*, through which this impelled air is blown in fine jets and with great force. The force of the jets can be regulated by the cocks or openings in the nozzles.

B is the oil-receptacle. It is made of glass, so as to be transparent, and is in the form of a bottle, having a contracted, open-ended mouth, *d*, at one end, while the other end is closed. It may be of cylindrical, square, or other form, and of any desired size.

C is the receiver, consisting of an open-topped metallic vessel, set in the center at the bottom of the fixture. Its mouth is of sufficient size to receive the neck of the receptacle.

D D are oil-pipes beneath the receiver, extending outward laterally, and connecting at their outer ends with the burners E E. At the center the oil-pipes connect with the bottom of the receiver by a duct, *f*, by which the oil is allowed to pass to the burners. The burners are of the style similar to those used in the German student lamp, and the oil is furnished to the burners in the same manner by the intermittent admission of air to the receiver through the oil-pipes.

g is an open-ended tube in the burner, resting in line with the nozzle *a*, as shown at the left in Fig. 1. The jet of air, blowing directly therein from the nozzle, carries in a body of the outer air by the frictional contact, thereby supporting the combustion of the lamp without the use of a chimney. A screen of wire-cloth or perforated plate, *h*, is placed above the inlet to break the force of the current. Instead of the tube *g*, a simple hole, *g'*, may be employed, as shown at the right.

H is a valve, made of any suitable material, resting in the neck of the oil-receptacle B. It is of the conical form shown, and is attached to a metallic head, *i*, from which depends a stiff stem, *k*, passing down through the mouth of the receptacle, and having at its lower end a cross-head, *l*. When the neck of the recptacle is inserted in the mouth of the receiver, the cross-head strikes the bottom of the latter and raises the valve, so that the oil can flow out.

I is a holder for retaining the upper end of the transparent receptacle. It is a ring embracing the upper end of the receptacle, and having a rim or flange, *m*, which rests over the top. It has two bearings or feet, *n n*, which slide up and down upon the pipes A^1 A^1 as ways. The holder is thus movable up and down upon the pipes. To insert the receptacle in place, the holder is raised to the position

shown in dotted lines, Fig. 1. When the receptacle is in place, the holder is slid down to embrace the upper end of the receptacle.

By the construction before described, the inverted glass receptacle is always in sight, and, being transparent, the oil can always be seen, which enables it to be replenished without running low. In filling, also, it prevents the overrunning of the oil.

The advantage of the shallow receiver at the bottom, in contradistinction to one which covers the whole receptacle, as in the German student lamp, is, first, that it enables the transparent receptacle to be seen at all times, as before stated; and, second, it enables the loop or arch which incloses the receptacle (consisting of the pipes A^1 A^1) to be made shorter and occupy less space than would otherwise be necessary, in order to insert and remove the receptacle. This is an important matter, especially in chandeliers.

The lamp may be made with any number of burners, from one upward. It may be made in the form of a chandelier, a hanging lamp, a bracket lamp, or a standard lamp, as may be necessary or desirable.

Having thus described my invention, I do not claim, broadly, a receiver inclosing a portion or the whole of the receptacle; but

What I claim as my invention is—

1. An air-injecting lamp constructed with air-pipes A^1 A^1, inclosing the oil-receptacle B, branch pipes A^2 A^2, provided with the injectors *a a*, and oil-pipes D D, connected at one end with the receiver C and at the other with the burners E E, as shown and described, and for the purpose specified.

2. The combination, with the transparent receptacle B, constructed with the narrow neck *d* of the shallow receiver C contracted at its top so as to embrace only the neck, leaving the whole body of the receptacle exposed, as shown and described, and for the purpose specified.

3. The combination, with the transparent receptacle B and air-pipes A^1 A^1, of the sliding holder I, arranged to operate in the manner and for the purpose specified.

In witness whereof I have hereunto signed my name in the presence of two subscribing witnesses.

ABNER BURBANK.

Witnesses:
R. F. OSGOOD,
DOUGLASS HOVEY.