July 28, 1931. H. R. SEGAL 1,816,658

AUTOMATIC SAFETY RAZOR

Filed Jan. 25, 1929 2 Sheets-Sheet 1

Fig. 1.

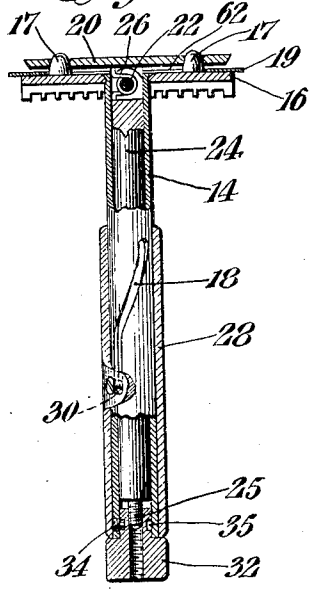

Fig. 2.

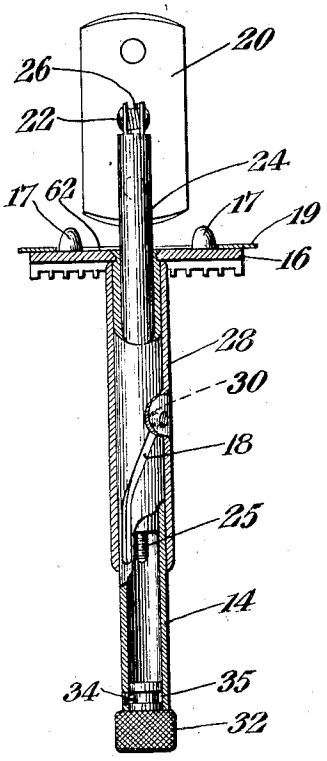

Fig. 3.

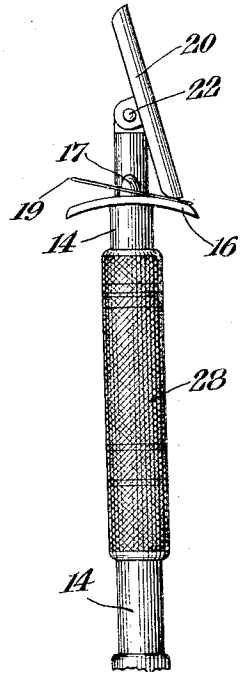

Fig. 4.

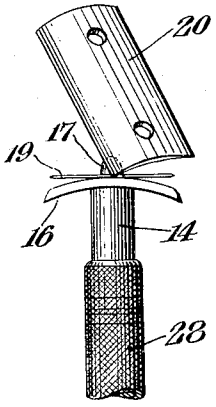

Fig. 5.

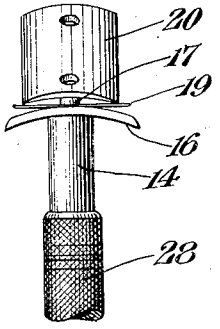

INVENTOR
H. R. Segal
BY
Duell Dunn & Anderson
ATTORNEYS

July 28, 1931. H. R. SEGAL 1,816,658

AUTOMATIC SAFETY RAZOR

Filed Jan. 25, 1929 2 Sheets-Sheet 2

Fig. 6.

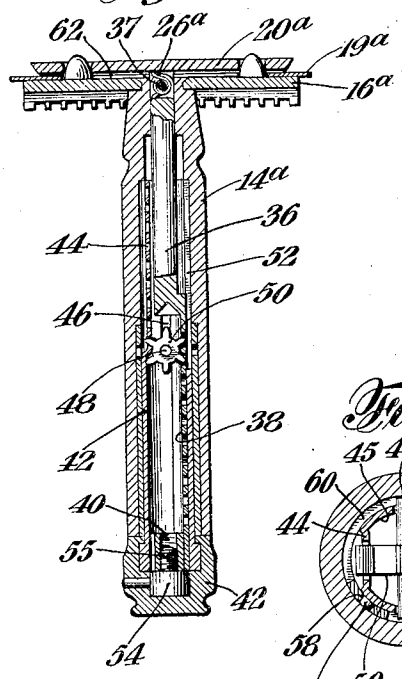

Fig. 7.

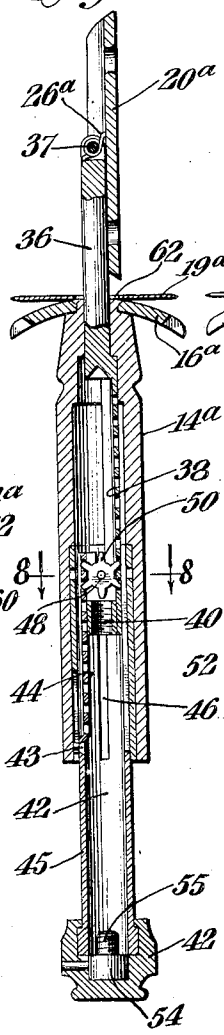

Fig. 13.

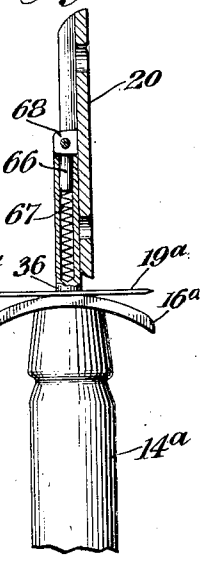

Fig. 8.

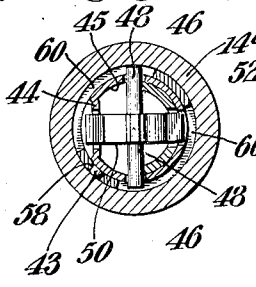

Fig. 9.

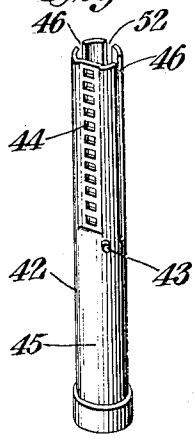

Fig. 10.

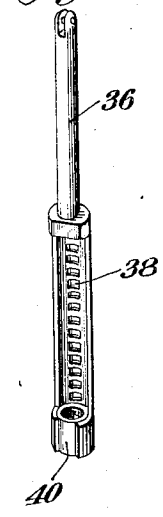

Fig. 11.

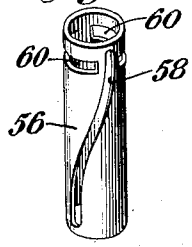

Fig. 12.

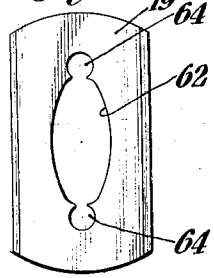

INVENTOR
H. R. Segal
BY
Duell, Dunn & Anderson
ATTORNEY

Patented July 28, 1931

1,816,658

UNITED STATES PATENT OFFICE

HYMAN R. SEGAL, OF NEW YORK, N. Y., ASSIGNOR TO SEGAL SAFETY RAZOR CORPORATION, OF NEW YORK, N. Y., A CORPORATION OF NEW YORK

AUTOMATIC SAFETY RAZOR

Application filed January 25, 1929. Serial No. 335,032.

This invention relates to improvements in safety razors.

It is a primary object of the invention to facilitate the introduction and removal of a blade to blade-holding position on the razor frame.

It is a further object to provide for this feature by guiding the blade holding plate in its rotational movement with respect to the shank of the razor.

A still further object relates to a new and improved razor blade particularly useful in connection with the razor shown.

These and other objects will appear more fully from the following description when considered in connection with the drawings in which:

Fig. 1 is a longitudinal sectional view showing one form of my invention.

Fig. 2 is a similar view showing the parts moved to different position.

Figs. 3, 4 and 5 illustrate the movement of the blade-holding plate during the movement of the same to blade-holding position.

Fig. 6 is a longitudinal sectional view illustrating a modified form of my invention.

Fig. 7 is a longitudinal sectional view taken at right angles to Fig. 6 and showing the blade moved to blade-removing position.

Fig. 8 is a transverse central view taken on the line 8—8 of Fig. 7.

Figs. 9, 10 and 11 are perspective views of portions of the apparatus shown in sections 6 and 8.

Fig. 12 is a detail view of the blade employed.

Fig. 13 is a detail illustrating a different type of spring construction for holding the blade in its adjusted positions.

Referring to the details of the drawings and particularly to Figs. 1 to 5, the razor includes a main shank 14 carrying a rigid guard 16 the latter being provided with suitable anchoring lugs 17 for positioning the blade 19 in shaving position. The shank 14 is formed throughout a portion of its length with a slot 18 the two extremes of which are joined by an angular portion for giving a turning movement of substantially ninety degrees to the movable elements of the razor. The end portions of the slot 18 extend in a substantially parallel direction and are connected to each other by a tangential central portion to form the completed slot.

The outer plate 20 is formed with openings for accommodating the studs 17 and is pivoted as at 22 to the inner stem 24. The end portions of the plate 20 are preferably curved as indicated in Fig. 2 and are inclined upwardly and outwardly, as shown, for a purpose referred to below. A torsion spring 26, engaged with the stem 24 and plate 20, serves to tilt the plate to the position shown in Fig. 2 whenever the plate is removed from the guard. The inner end of the stem 24 has a reduced screw-threaded portion 25 for co-action with the securing nut referred to below.

An actuating collar 28 encircles the shank 14 and is of sufficient length to cover the entire length of the slot 18 during its movement with the stem 24. A pin 30 passes inwardly through the collar 28 and slot 18 and into the stem 24 where it is secured. A securing nut 32 may be held to the shank 14 by means of an attachment pin 34 which passes inwardly into a slot 35 in the reduced portion of the nut to permit rotation of the attachment nut but without longitudinal movement thereof. The nut 32 is provided with inner screw threads coacting with the screw-threaded portion 25 for drawing the plate 20 securely against the blade 19 and guard 16.

In Fig. 12 I have shown a form of blade which has been found particularly useful in connection with my new razor. The blade 19 is formed with a central slotted portion 62 the side edges of which correspond substantially with the outer curved surface of the plate 20 shown in Fig. 1. The slot 62 terminates in circular apertures 64 the periphery of each of which is circular and represents slightly less than a complete circle.

When the blade 19 shown in Fig. 12 is introduced onto the guard 16 and anchor-

ing studs 17 the openings 64 fit snugly around the studs 17 so as to prevent any substantial movement between the blade and guard.

In the use of the above described razor the plate 20 may be separated from the guard 16 and blade 19 by unscrewing the nut 32 and moving the collar 28 outwardly to the position shown in Fig. 2. During outward movement of the collar 28, stem 24 and plate 20 these parts are rotated about the axis of the stem substantially ninety degrees due to the slot 18. As the plate 20 moves away from the blade and guard the spring 26 maintains one end of the plate on the surface of the blade until when the plate is in its outermost position the plate is pivoted to a longitudinal position with respect to the stem 24. The blade may then be removed upwardly over the plate 20 and a new blade introduced. After the new blade has been inserted onto the guard 16 and studs 17 movement of the collar 28 inwardly or downwardly along the shank 14 draws the bolt 24 with it and causes the plate 20 to engage upon the outer surface of the blade 19 as illustrated in Fig. 3. This movement is rendered more certain by reason of the inclined edges of the outer plate which reach outward beyond the slotted portion of the blade. Further movement of the collar 28 toward the nut 32 draws the plate progressively inwardly toward the guard and blade and causes the plate to bear against the blade 19 and to move to the positions shown in Figs. 4 and 5 in succession. The nut 32 may then be screwed onto the screw-threaded end of the stem 24 for securing the parts in shaving position.

In the form of the invention shown in Figs. 6 to 11 the outer plate 20*a* is movable with respect to the guard 16*a* and blade 19*a* for movement toward or from blade-holding position. The plate 16 is pivotally attached to the outer operating member 36 as indicated at 37. The plate may be spring-turned into inclined position, if desired, by means of the torsion spring 26*a* as in the first form of the invention. The member 36 is formed with a rack-forming portion 38 occupying slightly less than a semi-circular portion within the hollow interior of the shank 14*a*. The extended end of the rack-forming portion 38 carries a screw-threaded bushing 40 for securing the parts in their shaving position.

An inner operating member 42 is provided with a rack portion 44 and a cylindrical portion 45 positioned respectively in the outer and inner portions of the recess within the shank 14*a*. The rack-forming portion of the member 42 has opposite slots 46 for receiving the pivot stud 48 of the pinion 50. The member 42 may also be slotted as indicated at 52 for accommodating the outer ends of the pinion 50 during the operating of the latter.

An operating piece 54 is rotatively secured on the lower end of the member 42 and includes an inner screw-threaded portion 55 co-operating with the screw-threaded portion 40 of the member 38 for securing these parts against relative longitudinal movement in the shaving position of the parts.

A supporting sleeve 56, provided with an angular slot 58 and opposed semi-circular slots 60, may be employed for assembling the rack-forming members 36 and 42. The sleeve member 56 is arranged to encircle the members 36 and 42 and to receive the extended ends of pivot stud 48 within the slots 60. An additional pin 43 is provided on the operating member 42 and positioned within the slot 58 for rotating the members 36 and 42 as the latter are moved oppositely in the shank 14*a*.

The pinion 50 serves to move the member 36 in one direction when the other member 42 is moved in the opposite direction, due to the engagement of racks with opposite sides of the pinion. The engagement of the extended ends of stud 48 in the slots 48 causes all of the operating elements, described above, to be rotated together within the shank 14*a* upon the movement of the rack-forming members in the said shank.

In use this apparatus operates in substantially the same manner as in the first form of the invention except that after the operating member 54 has been unscrewed from the threaded portion 40 a downward movement of the members 54 and 42, with respect to the shank 14*a*, serves to extend the plate-holding member 36 oppositely to the position shown in Fig. 2. The torsion spring tilts the outer plate 20*a* so that the blade may be inserted and moved from the outer guard.

If desired the torsion spring may be omitted and either no spring employed or else a spring of the type shown in Fig. 13 may be used. This construction includes a movable plunger 66 pressed outwardly by means of the spring 67 into engagement with the pivot-forming lug 68 of the outer plate shown. The pivot portion 68 is formed with substantially square shoulders so that engagement of the plunger 66 with any of the relatively flat edges of the pivot-forming portion 68 serves to maintain the blade in any of its adjusted positions.

With the form of spring device shown in Fig. 13 the plate will be moved outwardly as described in connection with Figs. 1 to 12. However the plate will remain in its adjusted position until independently moved to longitudinal or transverse position with respect to the razor shank. It will be understood also that the invention is useful even without any spring for controlling the

plate 20. In this case the natural tilting of the plate 20 or 20*a* may be relied upon for maintaining the same in vertical position longitudinally of the razor shank.

It will be understood that the invention described herein is applicable either to a flexible blade employing curved coacting surfaces on the guard and plate or with a rigid blade employing relatively plain surfaces on the plate and guard.

Having now described my invention, I claim:

1. In a safety razor, a rigid frame, a supporting stem slidably arranged with respect to said frame, a blade engaging plate pivotally attached to said stem, and means for rotating said stem about its own axis as said stem moves outwardly of said frame, said plate having an end portion thereof inclined outwardly and upwardly.

2. In a safety razor, a frame including a shank and a guard, a stem mounted for longitudinal movement within said shank, a plate pivotally attached to one end of said stem, and means for rotating said stem and plate, automatically actuated during longitudinal movement of said stem with respect to said shank, said means including a pin attached to said stem and a coacting slot formed in said shank and a collar slidably mounted on said shank and engaged by said pin for causing said stem and collar to be moved together.

3. In a safety razor, a combined guard and shank, a combined supporting stem and outer blade engaging plate pivotally secured to said stem and means for moving said stem and plate outwardly with respect to said shank and guard and simultaneously rotating the former with respect to the latter and spring means for controlling the relative angular position of said plate and stem when moved outwardly from said shank.

4. A razor including, in combination, a clamping plate, a guard, a rod pivotally mounting said plate and movable with respect to said guard and means for simultaneously effecting a rocking of said plate with respect to said rod and an axial turning of said plate with respect to said guard as said rod is shifted with respect to the latter.

5. A razor including, in combination, a barrel, a guard mounted by said barrel, a rod movable along said barrel, a clamping plate secured to said rod and means associated with said rod and barrel for effecting a relative turning of said elements and said guard and clamping plate as said rod is moved along said barrel.

6. A razor including, in combination, a barrel, a rod movable along said barrel, a guard associated with one of said elements, a clamping plate pivotally secured to the other of said elements, means associated with said barrel and rod for effecting a relative turning of the same as said rod is moved along said barrel and means for clamping said rod and barrel against relative movements.

7. A razor including, in combination, a rod, a barrel for enclosing said rod, means extending from said rod and in engagement with said barrel to effect relative turning of said elements as said rod is shifted within said barrel, a guard associated with said barrel, a clamping plate carried by said rod and means exterior of said barrel for effecting such shifting of the rod.

8. In a safety razor, a frame including a shank and a guard, a stem mounted for longitudinal movement within said shank, a plate pivotally attached to one end of said stem, and means for rotating said stem and plate, automatically actuated during longitudinal movement of said stem with respect to said shank, said means including a slot formed with an inclined portion.

9. In a safety razor, a rigid frame, a supporting stem slidably arranged with respect to said frame, a blade engaging plate pivotally attached to said stem, means for rotating said stem about its own axis as said stem moves outwardly of said frame, said plate having an end portion thereof inclined outwardly and upwardly and spring means tensioned to incline said plate longitudinally with respect to said stem.

10. In a safety razor, a frame including a shank and a guard, a stem mounted for longitudinal movement within said shank, a plate pivotally attached to one end of said stem, spring means tensioned to tilt said plate longitudinally on said stem and means for rotating said stem and plate, automatically actuated during longitudinal movement of said stem with respect to said shank.

11. In a safety razor, a frame including a shank and a guard, a stem mounted for longitudinal movement within said shank, a plate pivotally attached to one end of said stem and spring means tensioned to tilt said plate longitudinally on said stem.

12. A razor including, in combination, a barrel, a rod movable along said barrel, a guard associated with one of said elements, a clamping plate pivotally secured to the other of said elements, means associated with said barrel and rod for effecting a relative turning of the same as said rod is moved along said barrel, means for clamping said rod and barrel against relative movements, and means for rocking said plate automatically with respect to said rod as the latter is shifted along said barrel.

13. A razor including, in combination, a rod, a barrel for enclosing said rod, means extending from said rod and in engagement with said barrel to effect relative turning of said elements as said rod is shifted within

said barrel, a guard associated with said barrel, a clamping plate carried by said rod, means exterior of said barrel for effecting such shifting of the rod and means within said barrel for preventing such shifting.

14. A razor including, in combination, a barrel, a rod within said barrel, said barrel being formed with a spirally extending slot, means extending from said rod and riding within said slot to effect relative turning between said rod and barrel as the former is shifted along the latter, a guard carried by said barrel and a clamping plate carried by said rod.

15. A razor including, in combination, a barrel, a rod shiftable within said barrel, the latter being formed with a slot presenting substantially longitudinally extending end portions offset from each other and a tangentially extending central connecting portion, a clamping plate carried by said rod, a guard carried by said barrel and means extending from said rod and riding within said slot for effecting a relative turning of said barrel and rod as the latter is shifted along the former.

16. A razor including, in combination, a barrel, a rod shiftable within said barrel, the latter being formed with a slot presenting substantially longitudinally extending end portions offset from each other and a tangentially extending central connecting portion, a clamping plate carried by said rod, a guard carried by said barrel, means extending from said rod and riding within said slot for effecting a relative turning of said barrel and rod as the latter is shifted along the former and a sleeve slidably mounted upon said barrel and engaged by said last named means whereby said rod may be shifted within said barrel.

17. A razor including, in combination, a barrel, a rod shiftable within said barrel, the latter being formed with a slot presenting substantially longitudinally extending end portions offset from each other and a tangentially extending central connecting portion, a clamping plate carried by said rod, a guard carried by said barrel, means extending from said rod and riding within said slot for effecting a relative turning of said barrel and rod as the latter is shifted along the former and means carried by said barrel and engaging said rod to lock the latter against movement with respect to said barrel.

18. A razor including, in combination, a barrel, a rod shiftable within said barrel, the latter being formed with a slot presenting substantially longitudinally extending end portions offset from each other and a tangentially extending central connecting portion, a clamping plate carried by said rod, a guard carried by said barrel, means extending from said rod and riding within said slot for effecting a relative turning of said barrel and rod as the latter is shifted along the former, means carried by said barrel and engaging said rod to lock the latter against movement with respect to said barrel, said clamping plate being pivotally secured to said rod and means whereby said plate will assume an inclined position automatically upon said rod being projected from within said barrel.

19. A razor including, in combination, a barrel, a guard secured to said barrel, a rod extendable along said barrel, a clamping plate pivotally secured to said rod, said guard being adapted to receive a blade, means whereby said clamping plate assumes an inclined position upon the projection of said rod from within said barrel and means acting to deflect said clamping plate from contact with the edge of said blade during the rocking of said plate with respect to said rod.

20. A razor including, in combination, a barrel, a guard secured to said barrel and to mount a razor blade, a rod within said barrel and to be projected beyond the same, a clamping plate pivotally secured to said rod, means for rocking said plate automatically upon said rod being projected, means for axially rotating said rod with respect to said barrel during such projection and means acting automatically to maintain all parts of said plate out of contact with the cutting edges of said blade and during the rocking and turning of said plate with respect to said guard.

21. In a safety razor, a frame including a shank and a guard, a stem mounted for longitudinal movement within said shank, a plate pivotally attached to one end of said stem, and means for rotating said stem and plate, automatically actuated during longitudinal movement of said stem with respect to said shank, said means including a pin attached to said stem and a co-acting slot formed in said shank.

22. In a safety razor, a frame including a shank and a guard, a stem mounted for longitudinal movement within said shank, a plate pivotally attached to one end of said stem, and means for rotating said stem and plate, automatically actuated during longitudinal movement of said stem with respect to said shank, said means including a pin attached to said stem and a co-acting slot formed in said shank and a movable collar encircling said shank and engaged with said pin for moving said stem and plate longitudinally of said shank.

23. In a safety razor, a frame including a shank and a guard, a stem mounted for longitudinal movement within said shank, a plate pivotally attached to one end of said stem, and means for rotating said stem

and plate, automatically actuated during longitudinal movement of said stem with respect to said shank, said means including a pin attached to said stem and a co-acting slot formed in said shank and a movable collar encircling said shank and engaged with said pin for moving said stem and plate longitudinally of said shank said collar extending over and obscuring said slot in all normal positions to which the same may be moved.

Signed at New York, in the county of New York and State of New York, this 23rd day of January, A. D. 1929.

HYMAN R. SEGAL.