April 12, 1949. G. F. ROONEY, JR 2,467,097

APPLICATOR FOR PARTICULATE MATERIAL

Filed April 3, 1946 2 Sheets-Sheet 1

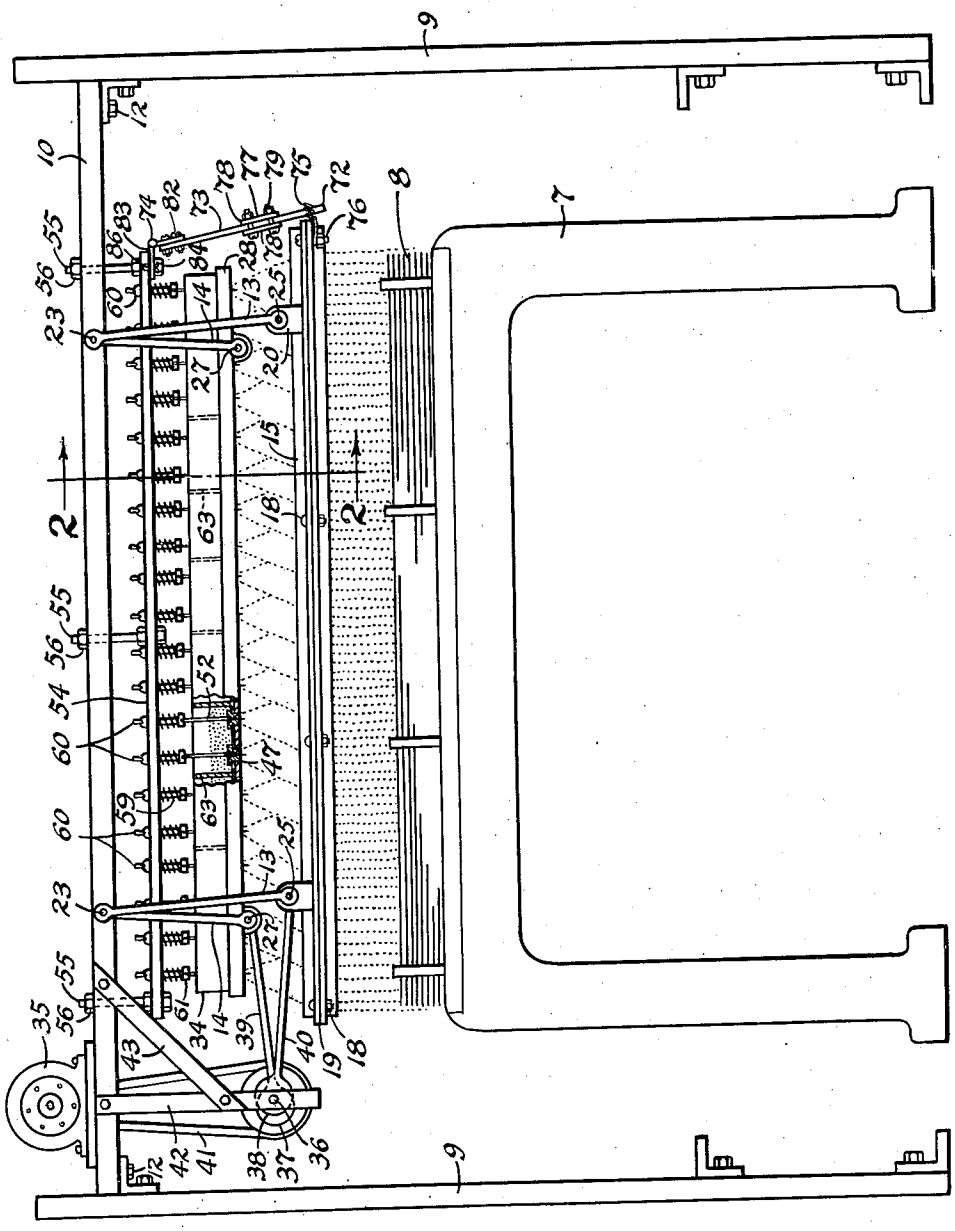

Fig. 1.

INVENTOR.
George F. Rooney Jr.
BY Zugelter & Zugelter
Attys.

April 12, 1949. G. F. ROONEY, JR 2,467,097

APPLICATOR FOR PARTICULATE MATERIAL

Filed April 3, 1946 2 Sheets-Sheet 2

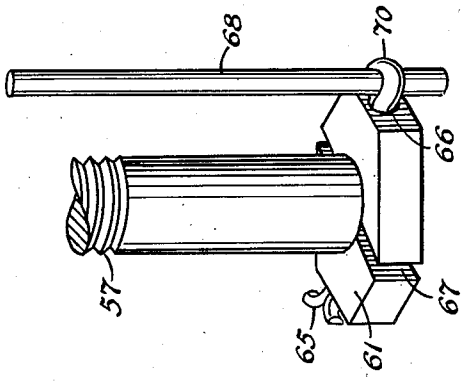

Fig. 4.

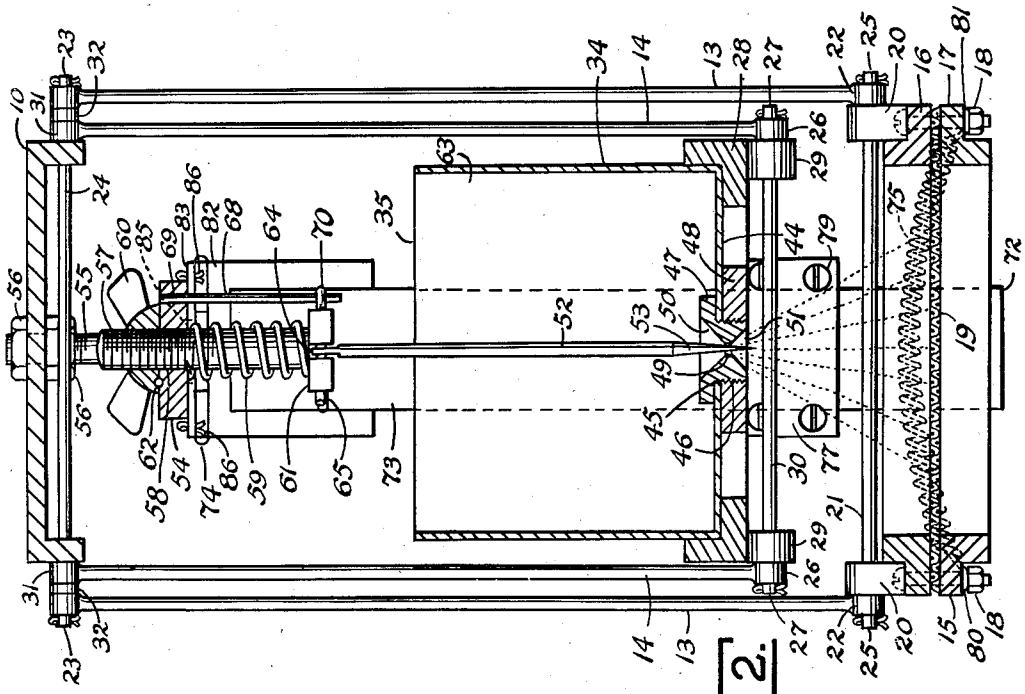

Fig. 2.

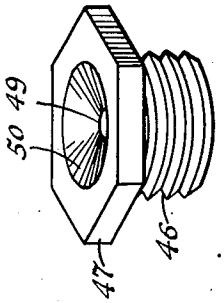

Fig. 3.

INVENTOR.
George F. Rooney Jr.
BY
Zugelter & Zugelter
Attys.

Patented Apr. 12, 1949 2,467,097

UNITED STATES PATENT OFFICE

2,467,097

APPLICATOR FOR PARTICULATE MATERIAL

George F. Rooney, Jr., Cincinnati, Ohio

Application April 3, 1946, Serial No. 659,395

10 Claims. (Cl. 91—43)

1

The present invention relates to an applicator, such as may be used for automatically directing a dust, powder, or granulated material onto an article or surface to be coated.

An object of the invention is to provide an applicator which is efficient, reliable, and dependable in its uniformity of operation under all ordinary conditions of temperature and humidity.

Another object of the invention is to provide an applicator which will definitely effect a substantial saving in coating costs, and in maintenance and servicing expenses.

A further object is to provide an apparatus of the character stated, which is simple of construction and assembly, with parts so designed and arranged as to insure continuous trouble-free operation with a minimum of noise and destructive vibration.

Another object is to provide an apparatus of the kind referred to, with improved means for the control and adjustment of the feed for powder, dust, or granules to be applied uniformly and selectively to a surface requiring coating.

Another object is to provide a simple and inexpensive applicator which is capable of being expeditiously shifted from one location to another when necessary.

The foregoing and other objects are attained by the means described herein and disclosed in the accompanying drawings, in which:

Fig. 1 is a side elevational view of the improved applicator.

Fig. 2 is an enlarged cross-sectional view taken on line 2—2 of Fig. 1.

Fig. 3 is an enlarged perspective view of a needle valve bushing which constitutes part of the present invention.

Fig. 4 is an enlarged fragmental perspective view of a needle valve mount constituting a detail of the invention.

As a sifter or applicator of powder, dust, flour or granular material, the device of the present invention is capable of use in environments and for purposes almost limitless in number, as will be evident. It might be employed, for example, in the manufacture of abrasive sheets, plates, or bars; in the manufacture of baked goods; in the coating of ceramics or glazed articles; in the application of absorptive powders for offset elimination in printing, and in countless other ways. Since it is impossible to anticipate, and impractical to show, within the limits of the following explanation, the many uses to which the device of the invention is applicable, a single application will be referred to herein by way of example with the understanding that the invention is not to be limited by the choice of the example cited. The selected example has to do with use of the applicator or sifter as an offset eliminator in the art of printing.

2

Common practice in offset elimination heretofore has consisted of applying a spray of liquid to the moving web or sheet of the printing press or other machine. This character of treatment for offset elimination is known to be highly objectionable for a number of reasons. For example, the spray contaminated the atmosphere of the printing establishment to such an extent as to impair the health of workers, and in the effort to avoid this objection, most printing establishments have resorted to the installation of expensive exhaust systems. The exhaust systems, in turn, presented difficulties of maintaining proper conditions of temperature and humidity in the press room, and it was usual to sacrifice the health of the workers in order to maintain proper conditions favorable to operation of the printing presses. Moreover, the spray material invariably found its way to the bearings and other sensitive parts of the machinery, with the result that frequent servicing and replacement of parts were necessary. The spray material also was known to impair the function and reduce the life of printing rollers in the printing machine.

All of the foregoing objections have been eliminated by means of the present invention, and in addition, a number of meritorious advantages have been attained by its adoption.

Referring to the drawings, 7 indicates that portion of a printing press frame which receives the stack of printed sheets 8. As will be understood, the printed sheets or the printed web while in motion, are to be treated for offset elimination, so that in the type of machine illustrated by way of example, the offset eliminator is located ahead of the stack 8 and at a position such that the treatment will be applied to the sheets as they advance toward the stack. In some other types of printing presses, the sheet material instead of being stacked as indicated in the drawing, will simply be wound upon a roll, and in that event the offset eliminating treatment will be applied before winding of the sheet or web to roll condition. The device of the invention is adapted for use in connection with either of the press structures mentioned.

The offset eliminator of the invention is adapted to straddle the printing machine, and for that purpose it is mounted upon a pair of frame members or standards 9 which extend

above the web or sheet surface to be treated. Between the standards is supported a substantially horizontal beam 10, which as illustrated by Fig. 2, may be of shallow channel iron construction, the ends of the beam being secured to the standards at 12.

Depending from opposite sides of the horizontal beam 10 are pairs of movable hanger elements 13 and 14, the pairs of hanger elements 13 being adapted to swingingly support a sieve frame 15 in substantial parallelism with the horizontal beam 10. The sieve frame may comprise a pair of open frame members 16 and 17 of angle iron construction, bolted together as at 18 with a fine mesh screen 19 interposed therebetween. One of the frame members such as 16, may be furnished with pairs of upright perforated lugs 20 adapted to receive a horizontal pin or shaft 21, to the ends of which shaft are pivotally mounted the lower ends 22 of the hanger elements 13. The upper ends of these hanger elements likewise may be supported pivotally by means of extending studs 23 carried by the horizontal beam 10. The studs may be separate elements, or if desired, they may be simply the opposite ends of a shaft or pin 24 passing through perforations in the side walls of the beam. In like manner, the extending ends 25 of shaft 21 might be in the form of studs projecting outwardly from the lugs 20 of the sieve frame.

The same studs 23 may be utilized for swingingly suspending the hanger elements 14—14, the lower ends 26 of which are pivotally supported by means of extending stud members 27 of a hopper support frame 28. The hopper support frame may be constructed of angle irons or any other suitable strip material formed as an elongated open frame having depending apertured lugs 29 in which the studs 27 are supported. If desired, studs 27 may constitute the free ends of a shaft or rod 30 spanning the hopper support frame as shown. By means of the multiple pairs of hanger elements 14, the hopper support frame is suspended for longitudinal reciprocating movement above the sieve frame. The upper ends of hanger elements 14 may be pivoted at 31 upon the members 23. The characters 32 indicate spacers for the hanger elements.

From the foregoing, it will be understood that the sieve frame and the hopper support frame are independently suspended from the horizontal beam 10 in spaced relationship, so that both of said frames may be longitudinally reciprocated or vibrated above the sheet material to be treated for offset elimination. The hanger elements, although herein illustrated as rigid sections of bar or rod stock, may just as well be in the form of flexible leaf springs having their upper ends securely fixed or clamped to the horizontal beam 10 while the lower ends thereof are similarly fixed to the hopper support frame and the sieve frame, with obviously similar results.

The hopper support frame 28 is adapted to accommodate an elongated hopper or receptacle 34 of elongated trough shape, the upper end of the hopper being open as indicated at 35. By means of a series of equally spaced dividing walls 63, the hopper or receptacle is to be compartmented, so that each compartment defined by the dividing walls may receive and hold a quantity of ink absorbing material in the form of a powder or dust. The purpose of the dividing walls in the hopper, is to preclude piling up of the absorbent material at oposite ends of the hopper as the hopper frame is subjected to rapid longitudinal reciprocating movement, this to be explained in the following paragraph.

In accordance with the invention, means are provided for vibrating or longitudinally reciprocating the hopper support frame 28 and the sieve frame 15. By way of example, the vibratory or reciprocatory movements are initiated, either directly or indirectly, by electrical means. By the indirect method, the movements may be initiated from an electric motor 35 conveniently mounted upon the horizontal beam 10 at one end thereof, the pulley of the motor being belted or otherwise placed in driving relationship with a shaft 36 carrying a pair of eccentrics 37 and 38 which, by means of connecting rods 39 and 40, respectively, transmit vibratory or reciprocatory movements to the frames 28 and 15, respectively. The character 41 indicates either a belt or a chain for transmitting motion from the motor shaft to the eccentric shaft 36. Shaft 36 may be supported in suitable bearings mounted upon the lower ends of a pair of depending arms 42 braced to the beam as at 43.

As above stated, the motion to be imparted to the frames 15 and 28 may be initiated either directly or indirectly by electric means. By the direct method, the eccentrics are to be replaced by electromagnetic means, for example solenoids or electromagnets operative directly upon the frames or upon suitable armatures attached thereto. In either case, however, the frames are to be reciprocated in synchronism, but always in opposite directions to neutralize the movements of the frames and thereby avoid objectionable bodily vibration of the apparatus. Thus, as illustrated by Fig. 1, the heels of the eccentrics are disposed at 180° to one another for obtaining the desired synchronous movements of the frames 15 and 28.

In the example illustrated, the ends of the connecting rods 39 and 40 which attach to the frames 28 and 15, respectively, may be pivotally or rockingly mounted upon the studs or pivots 27 and 25, respectively.

As is most clearly illustrated by Fig. 2, the various compartments of the hopper are each provided with a solid bottom wall 44 having a central opening 45 in which is fitted the externally threaded neck 46 of a needle valve bushing having an enlarged head 47 which bears firmly upon the bottom wall 44 about the aperture 45. This bushing may be attached to a longitudinally extending elongated attachment bar 48 having opposite ends thereof securely fixed to the ends of the hopper support frame 28. The attachment may be provided by means of the threads indicated at 46, which engage a threaded bore extending vertically through the bar 48. The construction described serves to maintain the receptacle 34 in connected relationship with the hopper frame 28.

As will be noted by reference to Fig. 1, each individual compartment of the hopper may carry a pair of needle valve bushings of the character just described, so that the hopper along its entire length may be securely mounted upon the attachment bar 48. In some instances, it may be desirable to increase or decrease the number of needle valve bushings associated with each compartment of the hopper, but for purposes of illustration, the valve bushings are shown duplicated in each compartment.

The various needle valve bushings disclosed are identical in character wherefore a description of one will suffice for the others also. Referring to

Fig. 2, it will be observed that the bushing has a central needle receptive bore 49 flanked by upper and lower counterbores 50 and 51, respectively. These counterbores preferably are aligned, and the bases thereof substantially meet at the bore 49, so that the bore is located well within the body of the bushing. The bushings may be applied and removed by simply unscrewing them from the threaded bore of bar 48 as indicated at 46.

Operatively associated with each needle valve bushing is a depending pin or needle valve 52, the lower end 53 of which is tapered to substantially a point and projected loosely through the bore 49 of the valve bushing. The point of the needle is arranged to dangle loosely within the bushing bore as the hopper is reciprocated, so that a flow of powdered material within the hopper compartment will be kept continuously in motion. As the powdered material drops through the valve bushing aperture onto the rapidly vibrating screen 19, it is thoroughly broken up and scattered with a high degree of uniformity onto the web or sheet that is moving beneath the sieve frame. With a multiplicity of valves operating in the manner just described, and as illustrated by Fig. 1, an exceedingly uniform and even sifting of the absorbent powder is deposited through the screen onto the web or sheet to be treated for offset elimination.

Means are provided for pivotally suspending and adjusting the valve needles relative to their respective valve bushings, both independently and collectively. Said means comprises a needle support bar 54, and means in the form of a series of vertically adjustable hanger bolts 55 normally fixed to the bar, and to the horizontal beam 10, so as to suspend the needle support bar substantially horizontally beneath the beam and over the hopper. By means of the adjusting nuts 56 at the upper ends of the hanger bolts, the needle support bar may be bodily adjusted as to elevation for establishing the position of all the valve needles generally relative to their cooperative valve bushings.

The individual adjustable mounts for the needles may be constructed substantially as depicted by Fig. 2, wherein 57 indicates a threaded bolt or rod freely slidable through an aperture 58 of bar 54, said bolt or rod being preferably surrounded by a compression spring 59 serving constantly to depress the rod or bolt downwardly to a limit determined by the thumb nut 60, which is threaded onto the upper end of the rod or bolt above the bar 54. The upper end of spring 59 may abut the underface of the bar, while the lower end thereof seats upon an abutment 61, which conveniently may be the head of the bolt 57. To lock the adjustment afforded by the thumb nut, the assembly may be provided with any suitable retainer, for example, a steel ball 62 seated within a depression on the upper face of bar 54 and adapted to engage any one of a series of depressions or notches in the lower face of the thumb nut.

The needle 52 is to have a swivel or pivotal connection with the lower end of the adjustable member 57, so that the needle may swing in correspondency with the longitudinal reciprocatory movements of the hopper and the needle bushings carried thereby. As a simple exemplary means of so pivoting or swiveling the needle, the needle may be provided at its upper end with an eye 64 adapted to loosely accommodate a pivot member 65 that passes through a transverse bore formed in the head 61 of the bolt. Said bore is

indicated at 66 upon Fig. 4. The head 61 may be milled or sawed as at 67 to accommodate the eye of the valve needle. The pivot member 65 may be in the form of a cotter pin, as shown.

To preclude rotation of the vertically adjustable bolt or rod 57 as the thumb screw is turned, or as the machine is operated, a rigid depending guide pin 68 may be fixed at 69 to the needle support bar and projected through the eye 70 of the cotter pin. The guide pin slides freely through the eye 70 as the bolt or rod 57 is elevated and lowered by means of the thumb nut. It will be understood, of course, that the details of construction of the needle regulator may be varied considerably within the skill of the mechanic, to provide the desired individual adjustments for the needles.

The operation of the device is as follows. The several compartments of the hopper are to be supplied with a quantity of absorbent material in powdered form, the needles having been previously adjusted to an approximately correct elevation within the needle valve bushings 46, by means of the adjusting nuts 56. Individual adjustments may then be made upon the needles separately at the thumb nuts 60, so that all the needles will effect the release of approximately equal quantities of the absorbent powder.

Upon then energizing the motor 35, the eccentrics 37 and 38 will be rotated with the driven shaft 36, to rapidly reciprocate the hopper 34 and the screen 19 synchronously, but in opposite directions. As these parts reciprocate, or vibrate, the multiplicity of needles 52 are laterally swung with the hopper to and fro, the pointed ends of the needles being thereby jiggled within the bushing bores 49 with a slight up and down movement. This causes agitation of the powdered material within the upper counterbores 50, accompanied by a driving of the powdered material through the bushing and onto the vibrating screen 19 carried by frame 15. The amount of material released by the needle valves will be dependent upon the extent to which the needles are lowered into the bushings. To regulate the flow of powdered material through the various needle valves, it is necessary only to effect the required adjustment at the thumb nuts 60.

In the event that the web or sheet of printed material requires offset elimination treatment at certain areas only of its width, the operator may selectively lower those needle valves which are above the area to remain untreated, thereby to stop the flow of powder through those valves in much the same manner as he would adjust an ink fountain blade. By this adjustment, a great saving of powder may be achieved with a consequent reduction in printing costs. Likewise, in the treatment of printed webs or sheets having areas which are lightly inked, and others which are heavily inked, the needle valves may readily be adjusted selectively to apply the proper amount of powder to the different areas without overtreating one area and undertreating the other area, in the effort to adequately overcome offsetting.

Under close observation, it is found that the hopper vibrations keep the particles of powdered material in a state of suspension within the several hopper compartments, so that a floating or dancing effect of the particles is maintained, aiding materially the uniformity and reliability of feed through the dry valves constituted by the needles and bushings.

As the operation of the apparatus continues,

the several compartments of the vibrating hopper may require refilling with powdered absorbent material. The replenishment of the compartments may be accomplished in any suitable manner, either by automatic means, or manually with the use of a scoop or other container. The function of the vibratory screen is to break up and uniformly distribute the powder deposited thereon by the valves.

As was previously explained, the apparatus is smooth and quiet in operation, due largely to the fact that the hopper frame and the sieve frame are synchronized to reciprocate at the same rate, but in opposite directions, thereby avoiding bodily vibration of the beam 10 and the standards which support it.

Under certain conditions of operation, the effectiveness of the apparatus may be enhanced by slightly modifying the vibratory movements of the sieve frame. This may be accomplished by means of a hammer held in yielding contact with one end of the reciprocating sieve frame. A representative form of hammer is illustrated by Figs. 1 and 2, wherein 73 indicates a bar or strip of metal swingingly depending from any stationary part of the apparatus, as at hinge 74, the part 73 having a lower end 72 constituting a striker in contact with frame 15. A weight 77 is mounted upon the hammer member 73 for adjustment along the length of the latter, this adjustment serving to regulate the value of the hammer blow and to synchronize its movements with the vibratory movements of the sieve frame. Weight 77 may comprise two metallic plates 78—78 clamped to opposite faces of hinged member 73 in any suitable manner, as by means of bolts or other fasteners 79.

The lower end 72 of the hammer is to be held yieldingly in contact with the adjacent end of the sieve frame, for maintaining coordination of movements of said frame and the hammer. This may be accomplished in any suitable manner, as by means of a length of coil spring 75 spanning the end corners of the frame and passing around the hammer end 72, as shown in Fig. 1. The opposite ends of the spring may be anchored to the frame at the locations 80 and 81, using the bolts 18—18 as anchorages.

From the foregoing, it should be apparent that rapid reciprocations of the sieve frame will be accompanied by a succession of hammer blows coordinated with the frame movements, to impart thereto abrupt impulses which serve to effectively move the powdered material through the screen of the sieve frame at a uniform rate. The adjustability of weight 77 enables the operator to regulate and synchronize the hammer movements with those of the sieve frame, to ensure efficiency of operation.

At the hinge end of member 73, the hinge leaf 82 may be applied in any suitable manner to said member, whereas leaf 83 may be adjustably secured to the needle support bar 54 by means of the nut 84 of the suspension bolt 55. An elongated slot 85 in leaf 83 permits bodily movement of the hinge lengthwise of the needle support bar 54, for purposes of regulation and detachment of the hammer. Retainers for precluding rotation of leaf 83 from axial alignment with bar 54, may be in the form of cotter pins or other abutment means 86 passing through holes in the leaf adjacent to the edges of the bar.

In the light of the foregoing description, it will be at once appreciated that all of the previously noted objectives are attainable with the use of simple and effective means which require but little servicing and a minimum of maintenance expense. The apparatus easily may be moved bodily for use upon different machines at various locations, and as previously pointed out herein, the apparatus is applicable to many different types of machines other than printing presses, for the performance of various types of services involving coating, dusting, and powdering operations.

It is to be understood that various modifications and changes in the structural details of the device may be made, within the scope of the appended claims without departing from the spirit of the invention.

What is claimed is:

1. An applicator comprising in combination, a vibratory sieve, a superposed vibratory sectional hopper for dry coating material including a series of compartments each having a perforated bottom and confining side walls, means for vibrating the sieve and the hopper, means including valve needles within the perforations of the hopper bottom for regulating the flow of coating material therethrough and onto the sieve beneath, a stationary overhead support for the valve needles, and individual means pivoting the needles for rocking movement relative to said support.

2. An applicator comprising in combination, a vibratory sieve, a superpose vibratory sectional hopper for dry coating material including a series of compartments each having a perforated bottom and confining side walls, means for vibrating the sieve and the hopper, means including valve needles within the perforations of the hopper bottom for regulating the flow of coating material therethrough and onto the sieve beneath, a normally stationary overhead support for the valve needles, means pivoting the needles for rocking movement relative to said support, and individually adjustable means for varying the extent of entry of each of the valve needles into the corresponding perforation of the hopper bottom.

3. An applicator comprising in combination, a vibratory sieve, a superposed vibratory sectional hopper for dry coating material including a series of compartments each having a perforated bottom and confining side walls, means for vibrating the sieve and the hopper, means including valve needles within the perforations of the hopper bottom for regulating the flow of coating material therethrough and onto the sieve beneath, a normally stationary overhead support for the valve needles, means pivoting the needles for rocking movement relative to said support, individually adjustable means for varying the extent of entry of each of the valve needles into the corresponding perforation of the hopper bottom, and means for adjusting the elevation of the normally stationary overhead support relative to the hopper bottom, for collectively varying the extent of entry of the needles into the hopper perforations.

4. An applicator comprising in combination, a vibratory sieve, a superposed vibratory sectional hopper for dry coating material including a series of compartments each having a perforated bottom and confining side walls, means for vibrating the sieve and the hopper, means including valve needles within the perforations of the hopper bottom for regulating the flow of coating material therethrough and onto the sieve beneath, a normally stationary overhead support for the valve needles, means pivoting the needles for rocking movement relative to said support,

individually adjustable means for varying the extent of entry of each of the valve needles into the corresponding perforation of the hopper bottom, means for adjusting the elevation of the normally stationary overhead support relative to the hopper bottom, for collectively varying the extent of entry of the needles into the hopper perforations, and means associated with the vibratory sieve for modifying the movements of the latter to enhance the sifting function.

5. Offset elimination apparatus comprising in combination, an elevated substantially horizontal normally stationary beam to span a printing machine, a vibratory screen suspended substantially horizontally beneath the beam, a vibratory hopper suspended from the beam above the screen, and comprising a series of compartments each having a perforated bottom and upright walls for confining a quantity of powdered material, a series of upright valve needles equal in number to the number of perforations in the hopper bottom, said needles each having an upper end and a tapered lower end, the lower ends of the needles being loosely received in the hopper perforations, and means attached to the beam for pivotally suspending the needles from their upper ends so that the needles move in correspondency with the hopper vibrations.

6. Offset elimination apparatus comprising in combination, an elevated substantially horizontal normally stationary beam to span a printing machine, a vibratory screen suspended substantially horizontally beneath the beam, a vibratory hopper suspended from the beam above the screen, and comprising a series of compartments each having a perforated bottom and upright walls for confining a quantity of powdered material, a series of upright valve needles equal in number to the number of perforations in the hopper bottom, said needles each having an upper end and a tapered lower end, the lower ends of the needles being loosely received in the hopper perforations, means attached to the beam for pivotally suspending the needles from their upper ends so that the needles move in correspondency with the hopper vibrations, and means associated with each needle for regulating the extent to which the needles enter the perforations in the hopper bottoms.

7. Offset elimination apparatus comprising in combination, an elevated substantially horizontal normally stationary beam to span a printing machine, a vibratory screen suspended substantially horizontally beneath the beam, a vibratory hopper suspended from the beam above the screen, and comprising a series of compartments each having a perforated bottom and upright walls for confining a quantity of powdered material, a series of upright valve needles equal in number to the number of perforations in the hopper bottom, said needles each having an upper end and a tapered lower end, the lower ends of the needles being loosely received in the hopper perforations, means attached to the beam for pivotally suspending the needles from their upper ends so that the needles move in correspondency with the hopper vibrations, and means for vibrating the suspended screen and the hopper in the general direction of extension of the beam, and at a common rate but in opposite directions.

8. Offset elimination apparatus comprising in combination, an elevated substantially horizontal normally stationary beam to span a printing machine, a vibratory screen suspended substantially horizontally beneath the beam, a vibratory hopper suspended from the beam above the screen, and comprising a series of compartments each having a perforated bottom and upright walls for confining a quantity of powdered material, a series of upright valve needles equal in number to the number of perforations in the hopper bottom, said needles each having an upper end and a tapered lower end, the lower ends of the needles being loosely received in the hopper perforations, means attached to the beam for pivotally suspending the needles from their upper ends so that the needles move in correspondency with the hopper vibrations, means for vibrating the suspended screen and the hopper in the general direction of extension of the beam, and at a common rate but in opposite directions, and means associated with the vibratory sieve for modifying the movements thereof to enhance the sifting function.

9. Offset elimination apparatus comprising in combination, an elevated substantially horizontal normally stationary beam to span a printing machine, a vibratory hopper suspended from the beam, and comprising a series of compartments each having a perforated bottom and upright walls for confining a quantity of powdered material, a series of upright valve needles equal in number to the number of perforations in the hopper bottom, said needles each having an upper end and a tapered lower end, the lower ends of the needles being loosely received in the hopper perforations, and means attached to the beam for pivotally suspending the needles from their upper ends so that the lower ends thereof move in correspondency with the hopper vibrations.

10. An applicator for dry powdered coating material which comprises in combination a vibratory sieve and a superposed vibratory hopper, means for vibrating the sieve and the hopper, said hopper having a plurality of perforations in the bottom thereof, a plurality of valve needles in the perforations of the hopper bottom, a needle for each perforation to regulate the flow of coating material therethrough onto the sieve beneath, and a stationary overhead support for the needles, each of said needles being pivotally mounted on said support for rocking movement relative thereto.

GEORGE F. ROONEY, JR.

REFERENCES CITED

The following references are of record in the file of this patent:

UNITED STATES PATENTS

Number	Name	Date
457,923	Morse	Aug. 18, 1891
1,310,543	Racy	July 22, 1919
1,872,628	Esch	Aug. 16, 1932
2,173,032	Wintermute	Sept. 12, 1939
2,223,476	Amstutz	Dec. 3, 1940