(12) PATENT
(19) AUSTRALIAN PATENT OFFICE

(11) Application No. AU 199939968 B2
(10) Patent No. 751339

(54) Title
Pressure feed coating application system

(51)[6] International Patent Classification(s)
B05C 001/08 B05C 003/18

(21) Application No: 199939968 (22) Application Date: 1999 .05 .18

(87) WIPO No: WO99/59731

(30) Priority Data

(31) Number	(32) Date	(33) Country
60/086047	1998 .05 .19	US

(43) Publication Date : 1999 .12 .06
(43) Publication Journal Date : 2000 .02 .17
(44) Accepted Journal Date : 2002 .08 .15

(71) Applicant(s)
Eugene A. Pankake

(72) Inventor(s)
Eugene A. Pankake

(74) Agent/Attorney
SPRUSON and FERGUSON,GPO Box 3898,SYDNEY NSW 2001

(56) Related Art
US 4351264
US 4839201
US 5484482

39968/99

PCT WORLD INTELLECTUAL PROPERTY ORGANIZATION
International Bureau

INTERNATIONAL APPLICATION PUBLISHED UNDER THE PATENT COOPERATION TREATY (PCT)

(51) International Patent Classification 6 : B05C 1/08, 3/18, C05C 3/12, 1/08 — A2

(11) International Publication Number: **WO 99/59731**

(43) International Publication Date: 25 November 1999 (25.11.99)

(21) International Application Number: PCT/US99/10819

(22) International Filing Date: 18 May 1999 (18.05.99)

(30) Priority Data:
60/086,047 19 May 1998 (19.05.98) US

(71)(72) Applicant and Inventor: PANKAKE, Eugene, A. [US/US]; 2499 Fuquay Road, Newburgh, IN 47630 (US).

(74) Agent: CAMORIANO, Theresa, F.; Wheat, Camoriano, Smith & Beres, 8225 Shelbyville Road, Louisville, KY 40222 (US).

(81) Designated States: AL, AM, AT, AU, AZ, BA, BB, BG, BR, BY, CA, CH, CN, CU, CZ, DE, DK, EE, ES, FI, GB, GE, GH, GM, HR, HU, ID, IL, IS, JP, KE, KG, KP, KR, KZ, LC, LK, LR, LS, LT, LU, LV, MD, MG, MK, MN, MW, MX, NO, NZ, PL, PT, RO, RU, SD, SE, SG, SI, SK, SL, TJ, TM, TR, TT, UA, UG, US, UZ, VN, YU, ZW, ARIPO patent (GH, GM, KE, LS, MW, SD, SL, SZ, UG, ZW), Eurasian patent (AM, AZ, BY, KG, KZ, MD, RU, TJ, TM), European patent (AT, BE, CH, CY, DE, DK, ES, FI, FR, GB, GR, IE, IT, LU, MC, NL, PT, SE), OAPI patent (BF, BJ, CF, CG, CI, CM, GA, GN, GW, ML, MR, NE, SN, TD, TG).

Published
Without international search report and to be republished upon receipt of that report.

(54) Title: PRESSURE FEED COATING APPLICATION SYSTEM

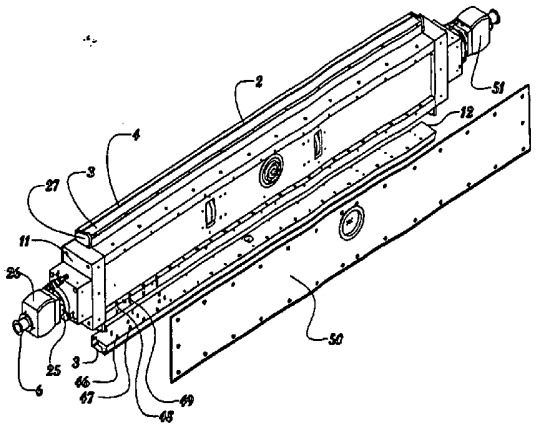

(57) Abstract

The present invention is a device and a method of applying a coating to a web. The device comprises a feed nozzle (2) coupled to stiffener (11) coupled to a spring (30) coupled to a feed nozzle slide position/force adjuster (17). The feed nozzle (2) comprises a fluid reservoir (12), a feed pipe (6), a metering surface (4), end seals (27) and a back seal (3). The stiffener spring, as the frame deflects and polymer covered rolls deform, permits the rotation of the feed nozzle (2) so a proper geometry is maintained, permitting increased control and a wider film thickness control range for a specific nozzle shape. This device permits greater film thickness control, ability to process at much higher speeds than currently achievable, and a wider range of film thickness. This device permits coatings to be applied at much wider ranges of rheological characteristics. Coatings can be applied at higher percent solids with improved characteristics.

Pressure Feed Coating Application System

Background of the Invention

Field of the Invention

This invention relates to a device that is a pressure feed coating application device for applying coatings such as, but not restricted to; solvent or water based coatings to webs such as, but not restricted to steel, aluminum, textiles, paper or film.

Background Information

This is a much simpler and significantly different way to apply a coating to a web such as, but not restricted to, a web of aluminum, steel textiles, paper or film.

Prior art that this replaces includes:

2,761,419	9/04/56	Torpey et al
3,526,528	9/01/70	Takahashi et al
3,884,611	5/20/75	Anderson et al
3,940,221	2/24/76	Nissel
4,332,543	6/01/82	Fulton et al
4,480,898	11/06/84	Talor
5,234,500	10/10/93	Korokayl
5,320,679	6/14/94	Derezinski et al
5,329,964	7/19/94	Derezinski et al
5,395,653	3/07/95	Baum
5,743,964	4/28/98	Pankake

As can be seen from the above, this is a crowded art.

Pankake, U.S. Patent 5,743,964 exemplifies prior art roll coating. The rest of the patents referred to above involve various die and slot approaches, including slots

combined with chambers.

The primary technology for application of film in the 1 milligram/square inch to 30+ milligrams/square inch of fluid on a substrate at speeds greater than 250 feet/minute involves a process known as roll coating. This consists of picking up a fluid out of an open pan with a pick-up roll or feeding the fluid by gravity into a top nip. The fluid is then transferred from that roll to the next or transmitted through a nip to the next roll. Eventually the fluid is transferred from a roll to the substrate.

Another approach commonly used for application of fluid to a substrate involves use of a die or slot. This process is normally limited to speeds of approximately 200 feet/minute. The fluid may be deposited to a roll for transfer to the substrate or directly onto the substrate with this method.

Coating being picked up out of a pan, sprayed or nip fed is exposed to ambient conditions and the atmosphere. This permits "dry out" or "skinning-over", evaporation of volatiles that contribute to product variability and environmental pollution, "foaming", and splashing. Numerous other defects are also associated with unstable or uncontrolled fluid dynamics that occur at the entry point of the roll into the fluid contained in the pan, the exit point of the roll out of the fluid in the pan, or at the nip point. By nip point is meant the pinch point between rollers. Some of these defects are often labeled as skips, seashore, ribbing, blisters, voids, shinnies, or splotching. The fluid picked up out of a pan is susceptible of being slung from the roll ends creating a safety hazard, product defects, and a mess. The appearance and thickness of the applied fluid is governed by a very complex relationship between the equipment configuration, equipment settings, and the fluid characteristics. Some of these variables include number of rolls, rotation direction of rolls, roll material, roll finish, roll diameter, roll hardness, roll geometry, nip pressures, fluid viscosity, and fluid rheology. The relationships of all of these variables in the roll coating process today provide a relatively small window for successful application of specific fluid at a specific thickness. Fluids

are very often applied at viscosities of 10 to 500 centistokes depending on the desired applied film thickness. This requires addition of large volumes of solvents or carrier fluid in many cases. As these large volumes of solvents evaporate into the atmosphere, this is very undesirable from an environmental standpoint.

Set-up of the above process must also be done in a way to achieve the desired film thickness while miminizing an appearance defect known as ribbing in the roll coating process. Typically fluids are reduced in viscosity and long flow-out zones are provided, these flow-out zones permit the ribs to be leveled out.

Uses of open pans create major limitations to rapid, repeatable product changes. Typically a product change for a feed system requires between 10 minutes and several hours. To achieve product changes in less than 30 minutes it usually mandates additional investments of millions of dollars in capital equipment and labor intense activities on major web processing lines.

Object of the Invention

It is an object of the present invention to substantially overcome or at least ameliorate one or more of the disadvantages of the prior art, or at least to provide a useful alternative.

Summary of the Invention

In a first aspect, the present invention provides a coating apparatus for coating a moving surface with a liquid, the surface having a width and moving in a first direction, the apparatus comprising:

a stiffener having first and second ends and rotatable about an axis, the axis parallel with the surface, the stiffener elongated in the axial direction, the stiffener comprising a first nozzle and a second nozzle, each of the first nozzle and the second nozzle elongated in the axial direction;

the stiffener movable between first and second positions, the stiffener in said first position juxtaposing the first nozzle with the moving surface, the stiffener in said second position juxtaposing the second nozzle with the moving surface;

each of the first nozzle and the second nozzle comprising a metering surface, a back seal, and end seals at respective first and second ends of the stiffener, the metering surface and back seal each elongated in the axial direction and parallel with each other and with the end seals defining a reservoir cavity;

the stiffener further comprising first and second feed pipes corresponding with the first and second nozzles, each feed pipe feeding to the reservoir cavity of the respective nozzle;

AUSTRALIAN PATENT OFFICE

the nozzles less wide in the axial direction than the width of the surface, the arrangement of the back seal and the metering surface such that the surface when moving in the first direction encounters first the back seal and afterwards the metering surface;

the liquid provided to a reservoir, when juxtaposed with the moving surface, from either gravity or a low pressure pump.

In a second aspect, the present invention provides a method for use with a coating apparatus for coating a moving surface with a liquid, the surface having a width and moving in a first direction, the apparatus comprising a stiffener having first and second ends and rotatable about an axis, the axis parallel with the surface, the stiffener elongated in the axial direction, the stiffener comprising a first nozzle and a second nozzle, each of the first nozzle and the second nozzle elongated in the axial direction; the stiffener movable between first and second positions, the stiffener in said first position juxtaposing the first nozzle with the moving surface, the stiffener in said second position juxtaposing the second nozzle with the moving surface; each of the first nozzle and the second nozzle comprising a metering surface, a back seal, and end seals at respective first and second ends of the stiffener, the metering surface and back seal each elongated in the axial direction and parallel with each other and with the end seals defining a reservoir cavity; the stiffener further comprising first and second feed pipes corresponding with the first and second nozzles, each feed pipe feeding to the reservoir cavity of the respective nozzle; the nozzles less wide in the axial direction than the width of the surface, the arrangement of the back seal and the metering surface such that the surface when moving in the first direction encounters first the back seal and afterwards the metering surface; the method comprising the steps of:

placing the stiffener in the first position;

providing the liquid to the reservoir of the first nozzle by either gravity or a low pressure pump;

applying liquid to the surface via the first nozzle;

ceasing provision of the liquid to the reservoir of the first nozzle;

rotating the stiffener to the second position;

providing the liquid to the reservoir of the second nozzle by either gravity or a low pressure pump;

applying liquid to the surface via the second nozzle;

ceasing provision of the liquid to the reservoir of the second nozzle; and

rotating the stiffener to the first position.

AUSTRALIAN PATENT OFFICE

The preferred embodiment is a device for and a method of applying a coating to a material web such as, but not restricted to a sheet of steel, aluminium, textile, paper, or film. The device for and method of comprises a feed nozzle through which coating material is fed under pressure supplied by gravity or a low pressure pump. The feed nozzle seals up against either the web or a roll that transfers the coating material to the web. The feed nozzle is comprised of a fluid reservoir, a metering surface, end seals, and a back seal. The fluid reservoir in conjunction with the end seals and the back seal form a cavity which contains the fluid as it is

AUSTRALIAN PATENT OFFICE
[RALIBLL]13235.doc:cas

being fed through the feed nozzle. The device further comprises a support spring, support bearings, nozzle contact angle adjustment assembly, profile adjustment device, feed nozzle force sensor, nozzle contact angle adjustment assembly 32, a profile control device, a rotational locking mechanism 25, a feed nozzle cleaning assembly 39, a applicator roll cleaning assembly 54 and a stiffener. The stiffener can be integral with the feed nozzle or can be a separate stiffener attached to the feed nozzle. The support spring is coupled to the stiffener through low friction angular bearings on both ends of the stiffener. The bearing on one end of the stiffener must also be a low friction axial bearing. These bearings must be capable of carrying the feed nozzle force, the weight of the assembly, force created by the drag of the web or applicator roll on the metering surface and prevent rotation of the Pressure Feed Coating Application Assembly. The support spring is also coupled to a feed bar slide position/force adjuster permitting position adjustment and adjustments of the feed nozzle pressure against the roll or the web. This embodiment permits feed nozzle force control and contact surface angle control to be operated independent of one another that cannot be achieved with die or slot coating. These technologies require precise control of clearances. The support spring, as the frame deflects and polymer covered rolls deform, permits the rotation of the feed nozzle so a proper geometry is maintained, permitting increased control and a wider film thickness control range for a specific nozzle shape. The Pressure Feed Coating Application Assembly and concept permits addition of multiple feed nozzles incorporated onto the stiffener permitting fast replacement of the feed nozzle by another feed nozzle for product changes and clean-up. The additional dynamic actuators of nozzle force and metering surface adds new quality, speed and film thickness capability to web coating. Dynamic feed nozzle force control can be accomplished independent of reservoir cavity pressure and metering surface contact angle.

The feed nozzle and support frame can include a profile adjustment device to control the bending or profile across the bar permitting variable coating thickness

profiles or correcting variable thickness profiles across the web with this feed system. Profile control of the housing or support can be done via hydraulic cylinders, stepper motors, pneumatic cylinders, manual linkages, etc. The profile control is not limited to the aforementioned but may be done in any manner that will permit controlled and repeatable flexing of the member. Profile thickness control is the control of film thickness across the width of the product.

Control of pressurized coating and coating build-up at ends of the feed bar is accomplished by means of an end seal in the feed bar. The end seal may have several different configurations. It basically uses hydrodynamics or a labyrinth effect to seal the ends of the pressurized feed bar, without damaging the application surface. The coating material being applied determines the shape. The end seal is designed to accommodate changing angulation of the nozzle and different surface shapes of an applicator roll or web surface. The excess coating bead at the end may be eliminated using an external taper and internal groove on the end seal.

The back seal may be made of any flexible blade compatible with the coating being applied that will seal and remain sealed against the surface being coated without causing damage. Examples of suitable materials include, but are not restricted to aluminum, steel, plastic.

Brief Description of the Drawings

Fig. 1 illustrates an end view of the preferred embodiment of the present invention, a pressure feed coating application assembly applied to an applicator roll.

Fig. 2 illustrates details of the present invention.

Fig. 3 is a cross section view of details of the present invention.

Fig. 4 is an exploded view illustrating a profile control system.

Fig. 5 illustrates a locking mechanism.

Fig. 6 illustrates a nozzle cleaning assembly.

Fig. 7 illustrates an alternate (directly to web) application of the present invention.

Fig. 8 illustrates a second alternate application of the present invention.

Fig. 9 illustrates a roll cleaning assembly.

Description of the Preferred Embodiments

Referring to Figs. 1, 2, 3, 4, and 5, the preferred embodiment of the present invention, a pressure feed coating application system 1 comprises at least one feed nozzle 2, at least one feed pipe 6, a support spring 30, a stiffener 11, at least one support bearing 26, nozzle contact angle adjustment assembly 32, a profile control device, a rotational locking mechanism 25, a feed nozzle cleaning assembly 39, a applicator roll cleaning assembly 54, a feed nozzle force sensor 28 and a feed nozzle position slide position/force adjuster 17. Each feed nozzle 2 comprises a back seal 3, end seals 27, a reservoir 12, a metering surface 4, and a reservoir cavity 5. Coating material typically, but not always, suspended in a solvent is fed as a fluid into the feed pipe 6, under pressure from either gravity or a low pressure pump into the reservoir cavity 5. The metering surface 4 is metering the fluid as it flows out of the reservoir cavity 5 which is contained within the reservoir 12. The back seal 3 is coupled to the reservoir 12. The end seals 27 are coupled to the reservoir 12 sealing the ends of the reservoir 12. The reservoir 12 in conjunction with the end seals 27, the back seal 3, forms the reservoir cavity 5, which contains fluid to be metered from the metering surface 4 which is a surface of the reservoir 12.
The metering surface 4 of the feed bar 2 is forced against an applicator roll 35 which then transfers the coating material to a web 15 which is pulled around a backing roll 42.

As shown in Figs. 3 and 4, the feed nozzle 2 is coupled to and reinforced by a stiffener 11, typically a fabricated beam adjacent to, around, and along the length of the feed nozzle 2. The stiffener is supported by at least one support bearing 26 which is coupled to a support spring 30. The support spring 30 is coupled to a

feed nozzle force sensor 28 which is coupled to a feed nozzle slide position/force adjuster 17. The feed nozzle force sensor 28 may be incorporated into the support spring 30, mounted under the support spring 30, or be incorporated into the feed nozzle slide position/force adjuster 17. The stiffener 11 may be integral with the feed nozzle 2. In the preferred embodiment of the present invention, the feed bar slide position/force adjuster 17 is typically an electric motor driving a ball screw 20, with a ball nut housing 21. As obvious to anyone skilled in the art, there are other ways such as hydraulic motors, hydraulic cylinders, hand cranks to name a few. There is also an applicator roll position/force 18, used when the initial application surface is a roll, said adjuster 18 including a ball screw 20 and a ball nut housing 21. The applicator roll position/force adjuster 18 is coupled to a base 19.

A seal is maintained between the feed bar 2 and the initial application surface 7. The back seal, 3 in the preferred embodiment of the present invention, is a strip of spring steel. This strip may be made of any flexible material that exhibits the seal characteristics and coating characteristics necessary without damage to the application surface. The purpose of the attachment of the feed nozzle 2 to the support spring 30 is, as fluid pressure builds up, to permit rotation of the feed nozzle 2 so a proper metering gap, for the thickness of fluid coating application desired, is maintained at the metering surface 4.

By adjusting the shape of the reservoir cavity 5, the heat build up from the turbulence of the coating material can be controlled. As the ratio of reservoir cavity 5 cross sectional area to the exposed surface being coated increases heat is added to the coating.

A drip pan 8 is shown in fig. 1 as a convenience for collecting spillage.

Figs. 2 and 4 show roll supports 14 for supporting a roll when used as the initial application surface 7.

The pressure feed coating application assembly 1 is supported by and rotateable within the stiffener rotational bearings 10 by the nozzle contact angle adjustment assemble 32. The rotation of said pressure feed coating application assembly 1 permits rapid change from one feed nozzle to another feed nozzle 2 permitting rapid product changes. The nozzle contact angle adjustment assembly 32 also serves as the device for precise control of the contact angle for the metering surface 4. Contact force, reservoir cavity pressure, shape of the metering surface and contact angle are all control actuators. These actuators provide a wide operating control window. Contact force, reservoir pressure and metering surface contact angle are all actuators that can be fully automated and dynamically controlled via mathematical algorithms or product feedback.

The pressure feed coating application system 1 enables complete control of the fluid through the application process. Pre-filtered and conditioned fluid is applied under pressure directly to the product or the applicator roll. There is no opportunity for the phenomena that create foam, skips, voids, shinnies, splotching, or slings to develop. The fluid is not open to the atmosphere, therefore the fluid cannot "skin-over" or "dry-out". The shape of the nozzle, the nozzle pressure, and the roll hardness provides precise control of the film thickness. Defects associated with unstable or uncontrolled fluid dynamics are eliminated. The elimination of large dip pans permits design of equipment for rapid product changes. Coatings may be applied with very good appearance (no ribs) at a much wider range of fluid viscosities.

Fig. 1 shows the shows the pressure feed coating application assembly 1 applied to an applicator roll 35, applied fluid to said applicator roll 35. The applicator roll 35 then applies the fluid to the web 15 which is shown pulled over a backing roll 42. Application of fluid directly to the product or to an applicator roll for transfer to the product provides significant improvements over conventional two and three roll coating systems. Application of pre-metered coating to the applicator roll eliminates the need for using a second or third roll. Improved product

characteristics can be achieved with one roll using this method.

Under certain circumstances it may be advantageous to use this system to apply coating to a roll one removed from an applicator roll. This roll may be operated in either the forward or reverse direction. This system still provides many advantages over conventional two or three roll, Roll Coating Systems.

The pressure feed coating application feed system 1 feeds pressurized coating into the sealed feed bar with pressurized fluid against the roll or substrate as opposed to designed clearances used in die, slot and curtain application systems.

The feed nozzle is supported in location to permit even application of fluid to the substrate or roll while sealing the ends and leading the edge of the feed nozzle without damaging the roll or substrate. The leading edge of the feed bar is sealed using the back seal 3. This back seal 3 is a flexible material that runs the full width of the feed nozzle. The blade rests against the substrate or applicator roll 35. Contact pressure (sealing pressure) can be developed several different ways. The methods include mechanical deflection or stressing of the back seal 3, deflection of the back seal 3 against the applicator roll 35 or substrate with internal pressure in the feed nozzle or a combination of the two. The downstream edge or application metering surface of the feed nozzle 4 is shaped specifically to provide the desired thickness and appearance characteristics for the specific substrate or roll and fluid. It may be flat, rounded, grooved, or any number of shapes. The ends of the feed nozzle 2 are sealed to the substrate or roll 35 by the end seals 27 to insure the inside of the feed nozzle 2 remains evenly pressurized across the width of the feed nozzle 2. The end seals 27 may be a labyrinth design, a mechanically contacting seals, or pressurized fluid seals.

In the preferred embodiment of the present invention, the materials would typically be metal, usually steel or aluminum.

In Fig. 4 a means of varying a coating thickness across the width of the web 15 is achieved by altering the profile of the feed nozzle 2. The stiffener 11 has a multiplicity of stiffener frame pulling apertures 48 and stiffener frame pusher threaded apertures 49. In the reservoir 12 there are a multiplicity of feed nozzle pulling threaded apertures 46 and feed nozzle pusher surfaces 47. Adjacent to each stiffener clearance 48 is a feeder nozzle pulling threaded aperture 46. Bolts are inserted through said clearance 48 to pull the reservoir 12 towards the stiffener 11. Bolts are threaded through the stiffener threaded apertures 49 to push against the feeder nozzle pusher surfaces. By this means, the feeder nozzle is distorted as required to achieve a variation in coating thickness applied to the web 15 as desired. This method for creating deflection of the metering surface illustrated in Figure 4. The axial shape control of the feed nozzle profile by deflecting the feed nozzle from the stiffener comprises of jacking fixtures, and pull down fixtures whereas these fixture may be manually adjusted or automatically adjusted by electro-mechanical or any other means.

Fig. 6 illustrates a feed nozzle cleaning assembly 39 which pivots about a pivot 51 to encompass the feed nozzle 2 that is off line. Pivot 51 must be located above the feed nozzle force sensor 28 to not interfere with the quality of coating film deposition. It comprises feed nozzle cleaning nozzles 9 through which a cleaning fluid can be sprayed to clean the feed nozzle 2 encompassed by the feed nozzle cleaning assembly 39. Also, as each feed nozzle 2 has its own feed pipe 6, cleaning fluid can be run through the feed pipe 6 for the off line feed nozzle 2 to flush out the feed nozzle 2 in addition to the cleaning action from the feed nozzle cleaning assembly 39. The equipment permits cleaning of an off-line nozzle while an on-line nozzle remains in service.

Fig 7 illustrates an alternate application of the pressure feed coating application assembly 1 where the feed nozzle 2 is applied directly to a web 15 against the backing roll 42.

Fig. 8 illustrates a second alternate application of the pressure feed coating application assembly 1 where the feed nozzle 2 is applied to the applicator roll 35 which applies fluid dispensed from the feed nozzle 2 onto the applicator roll 35 directly to the web 15 without a backup roll.

Fig. 9 illustrates a applicator roll cleaning assembly 54 which is a means of cleaning the applicator roll 35. In the preferred embodiment of the present invention this comprises a cleaning blade 36 coupled to a cleaning blade actuator 37 which pivots about a pivot 51, and comprises an applicator roll solvent applicator 33 with applicator roll cleaning nozzles 34. While said means of cleaning the applicator roll 35 is manually operable, as obvious to anyone skilled in the art, said means of cleaning the applicator roll 35 lends itself to automatic application in production applications. The design and positioning of the Pressure Feed Coating Application Assembly permits implementation of such cleaning system that cannot be accomplished with other current technology.

Although the description above contains many specificity's, these should not be construed as limiting the scope of the invention but as merely providing illustrations of some of the presently preferred embodiments of this invention.

Thus the scope of the invention should be determined by the appended claims in the formal application and their legal equivalents, rather than by the examples given.

The claims defining the invention are as follows:

1. Coating apparatus for coating a moving surface with a liquid, the surface having a width and moving in a first direction, the apparatus comprising:

a stiffener having first and second ends and rotatable about an axis, the axis parallel with the surface, the stiffener elongated in the axial direction, the stiffener comprising a first nozzle and a second nozzle, each of the first nozzle and the second nozzle elongated in the axial direction;

the stiffener movable between first and second positions, the stiffener in said first position juxtaposing the first nozzle with the moving surface, the stiffener in said second position juxtaposing the second nozzle with the moving surface;

each of the first nozzle and the second nozzle comprising a metering surface, a back seal, and end seals at respective first and second ends of the stiffener, the metering surface and back seal each elongated in the axial direction and parallel with each other and with the end seals defining a reservoir cavity;

the stiffener further comprising first and second feed pipes corresponding with the first and second nozzles, each feed pipe feeding to the reservoir cavity of the respective nozzle;

the nozzles less wide in the axial direction than the width of the surface, the arrangement of the back seal and the metering surface such that the surface when moving in the first direction encounters first the back seal and afterwards the metering surface;

the liquid provided to a reservoir, when juxtaposed with the moving surface, from either gravity or a low pressure pump.

2. The apparatus of claim 1 further comprising a feed nozzle cleaning assembly movable between first and second positions, said first position juxtaposing said feed nozzle cleaning assembly with said second nozzle when said first nozzle is juxtaposed with said moving surface, and said second position positioning said feed nozzle cleaning assembly away from said second nozzle when said first nozzle is juxtaposed with said moving surface.

3. The apparatus of claim 2 wherein said first position juxtaposing said feed nozzle cleaning assembly with said first nozzle when said second nozzle is juxtaposed with said moving surface, and said second position positioning said feed nozzle cleaning assembly away from said first nozzle when said second nozzle is juxtaposed with said moving surface.

4. The apparatus of claim 1 wherein the surface is an applicator roll, said roll transferring the liquid to a web.

AUSTRALIAN PATENT OFFICE

5. The apparatus of claim 1 wherein the surface is a web.

6. The apparatus of claim 1 wherein the liquid is paint.

7. The apparatus of claim 4 or 5 wherein the web is metal and the liquid is paint.

8. A method for use with a coating apparatus for coating a moving surface with a liquid, the surface having a width and moving in a first direction, the apparatus comprising a stiffener having first and second ends and rotatable about an axis, the axis parallel with the surface, the stiffener elongated in the axial direction, the stiffener comprising a first nozzle and a second nozzle, each of the first nozzle and the second nozzle elongated in the axial direction; the stiffener movable between first and second positions, the stiffener in said first position juxtaposing the first nozzle with the moving surface, the stiffener in said second position juxtaposing the second nozzle with the moving surface; each of the first nozzle and the second nozzle comprising a metering surface, a back seal, and end seals at respective first and second ends of the stiffener, the metering surface and back seal each elongated in the axial direction and parallel with each other and with the end seals defining a reservoir cavity; the stiffener further comprising first and second feed pipes corresponding with the first and second nozzles, each feed pipe feeding to the reservoir cavity of the respective nozzle; the nozzles less wide in the axial direction than the width of the surface, the arrangement of the back seal and the metering surface such that the surface when moving in the first direction encounters first the back seal and afterwards the metering surface; the method including the steps of:

placing the stiffener in the first position;

providing the liquid to the reservoir of the first nozzle by either gravity or a low pressure pump;

applying liquid to the surface via the first nozzle;

ceasing provision of the liquid to the reservoir of the first nozzle;

rotating the stiffener to the second position;

providing the liquid to the reservoir of the second nozzle by either gravity or a low pressure pump;

applying liquid to the surface via the second nozzle;

ceasing provision of the liquid to the reservoir of the second nozzle; and

rotating the stiffener to the first position.

9. The method of claim 8 further comprising the step, when the stiffener is in the first position, of juxtaposing a cleaning assembly with the second nozzle and cleaning the second nozzle.

AUSTRALIAN PATENT OFFICE

10. The method of claim 9 further comprising the step, when the stiffener is in the first position, of passing solvent into the feed pipe of the second nozzle.

11. The method of claim 9 further comprising the step, when the stiffener is in the second position, of juxtaposing the cleaning assembly with the first nozzle and cleaning the first nozzle.

12. The method of claim 11 further comprising the step, when the stiffener is in the second position, of passing solvent into the feed pipe of the first nozzle.

13. A coating apparatus for coating a moving surface with a liquid, the surface having a width and moving in a first direction substantially as hereinbefore described with reference to any one of the embodiments as that embodiment is shown in the accompanying drawings.

14. A method for use with a coating apparatus for coating a moving surface with a liquid, the surface having a width and moving in a first direction substantially as hereinbefore described with reference to any one of the embodiments as that embodiment is shown in the accompanying drawings.

Dated 25 June, 2002
Eugene A Pankake
Patent Attorneys for the Applicant/Nominated Person
SPRUSON & FERGUSON

AUSTRALIAN PATENT OFFICE

Figure 1

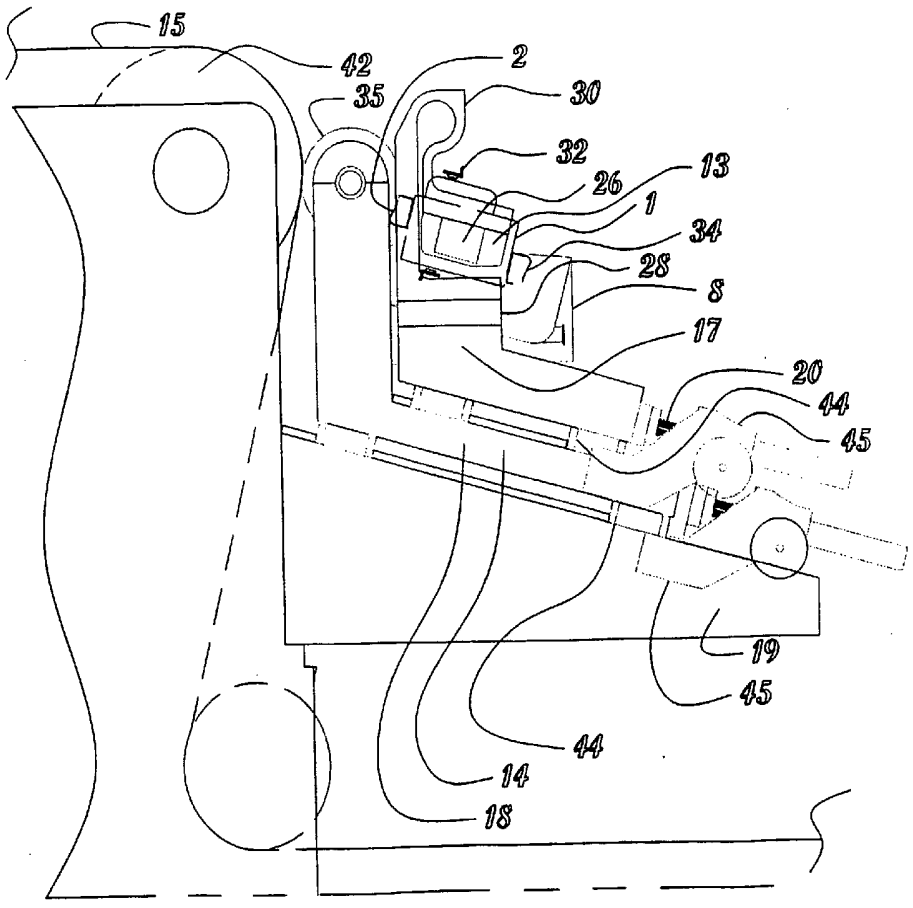

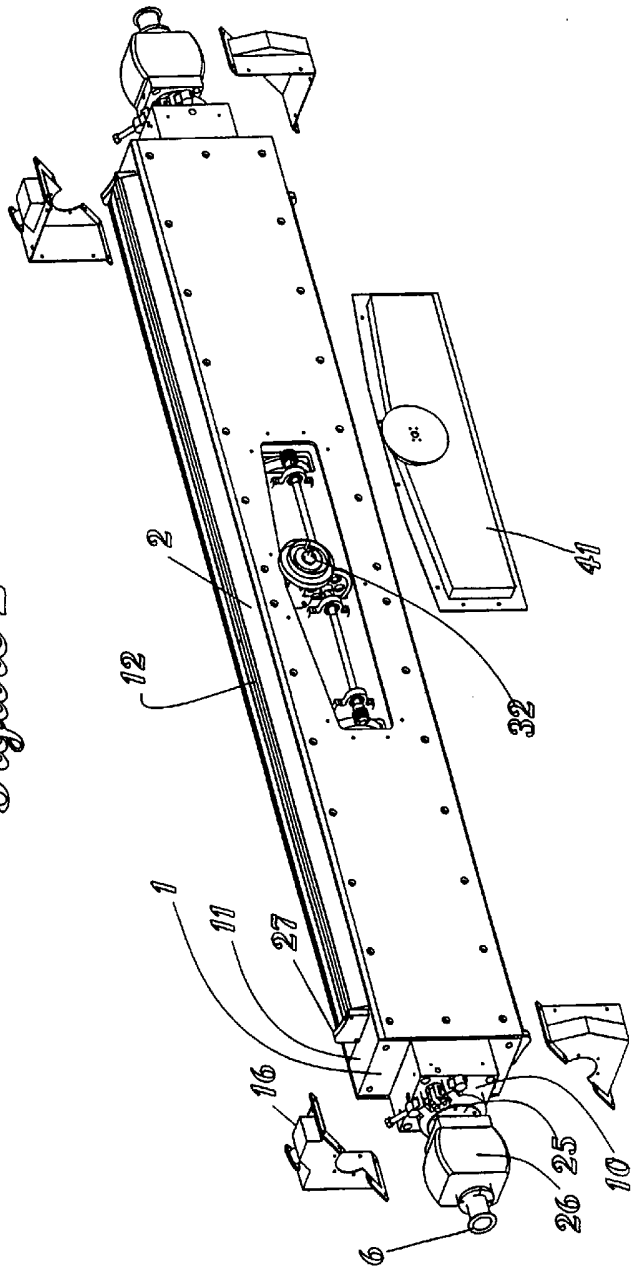

Figure 2

Figure 3

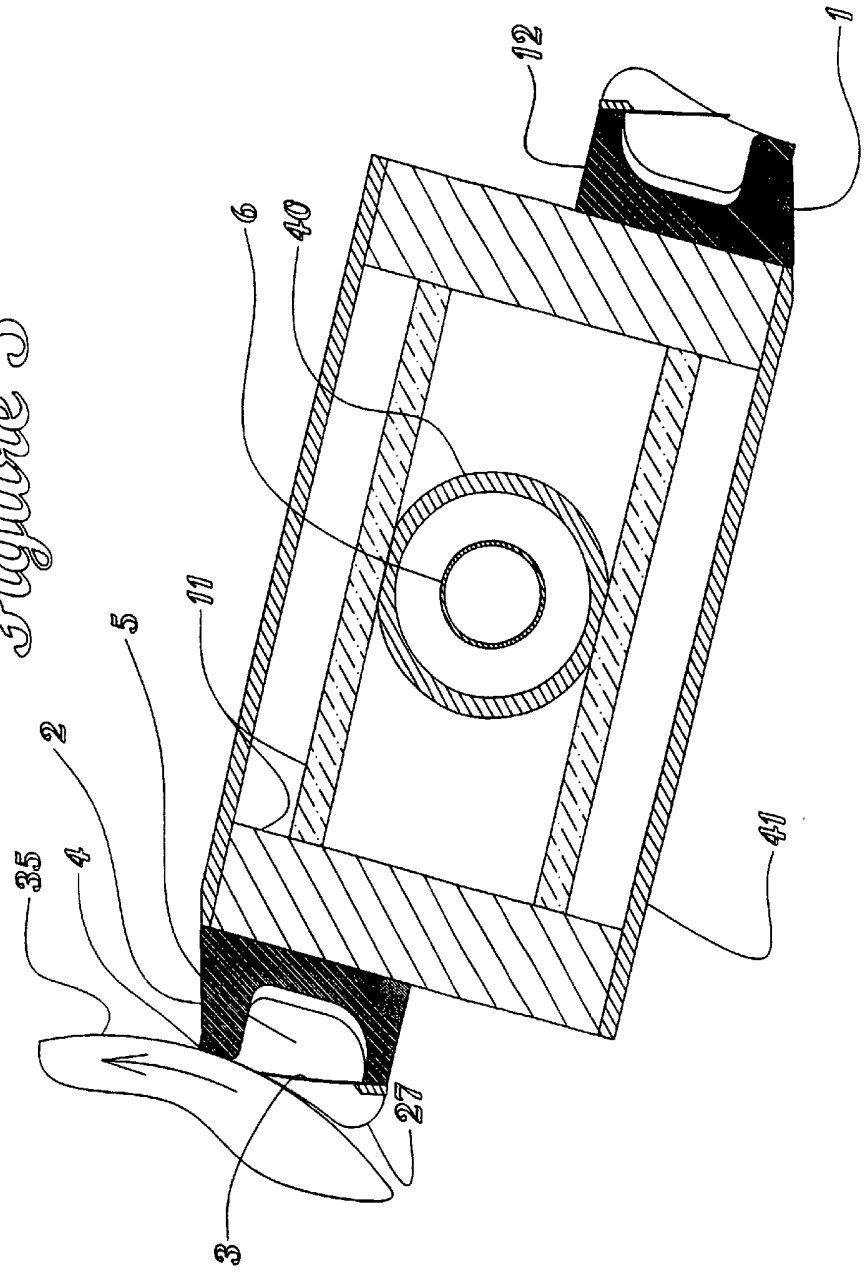

Figure 4

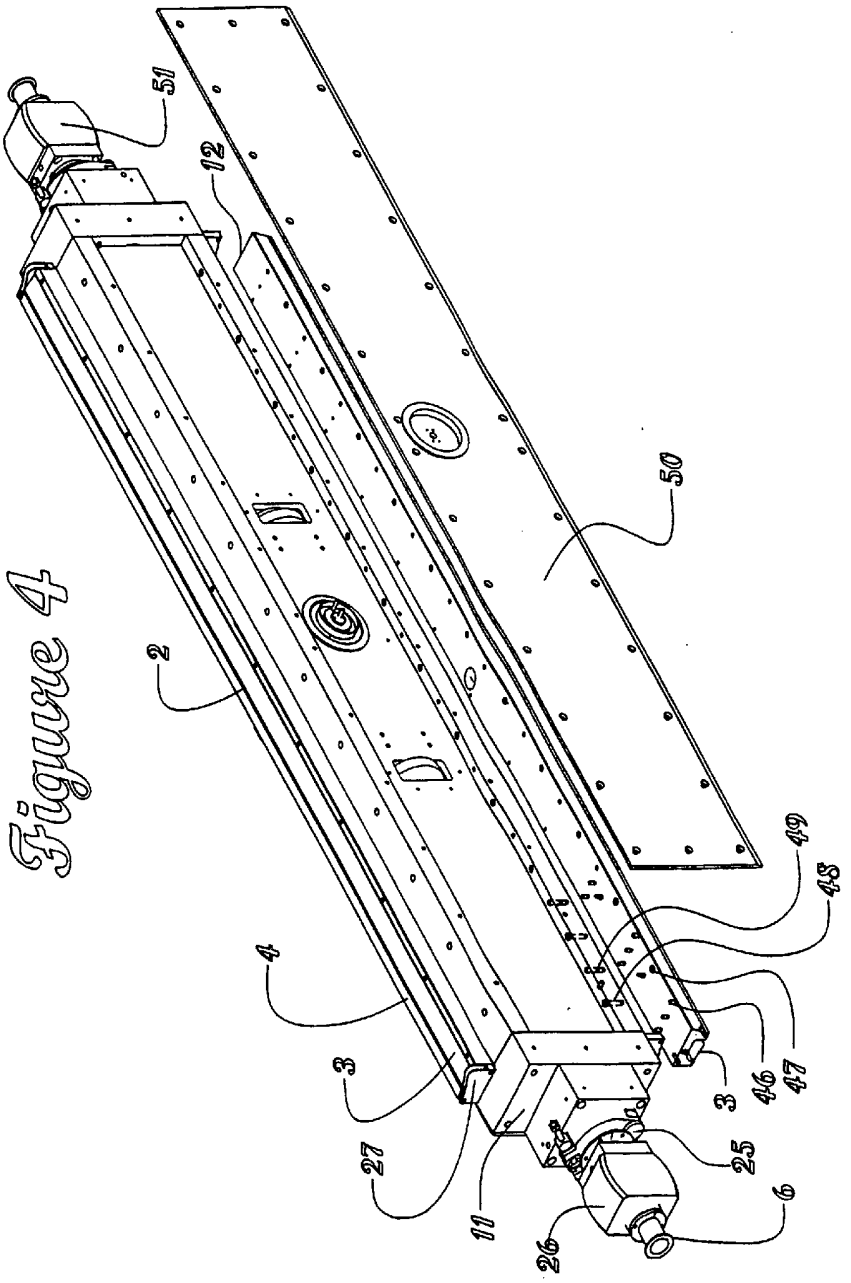

Figure 5

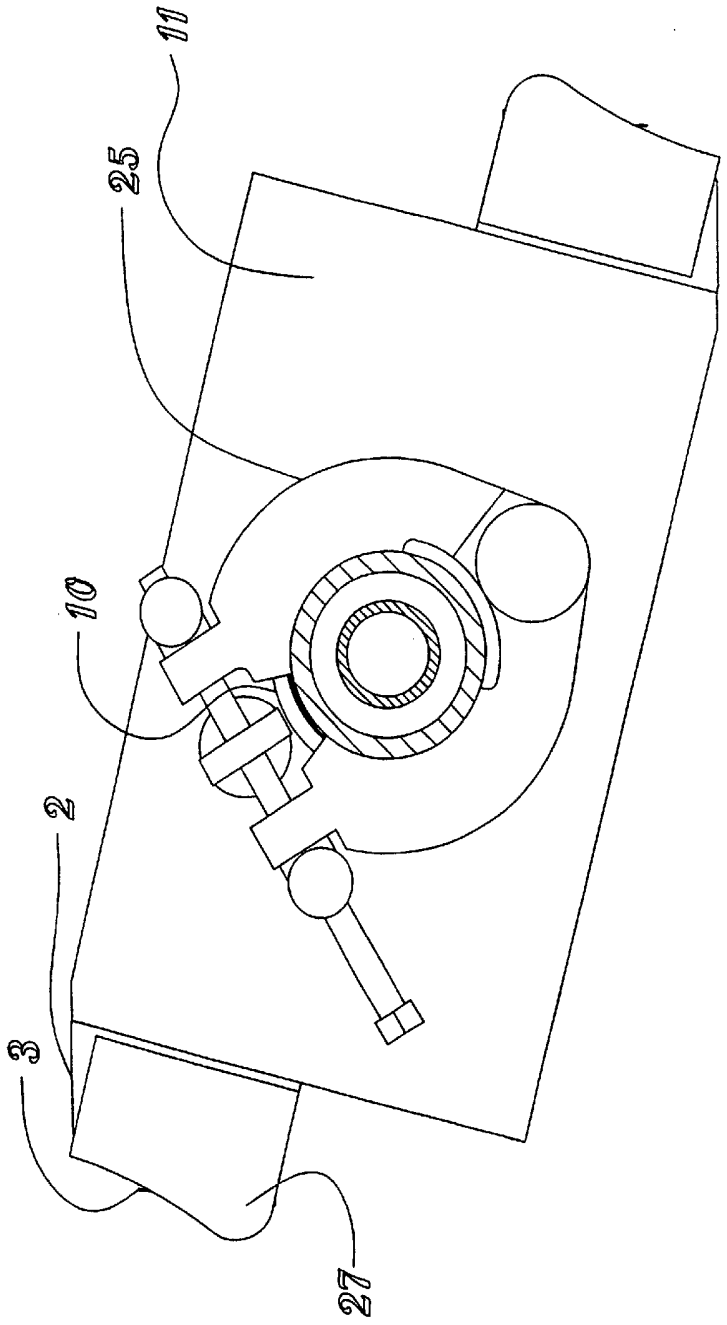

Figure 6

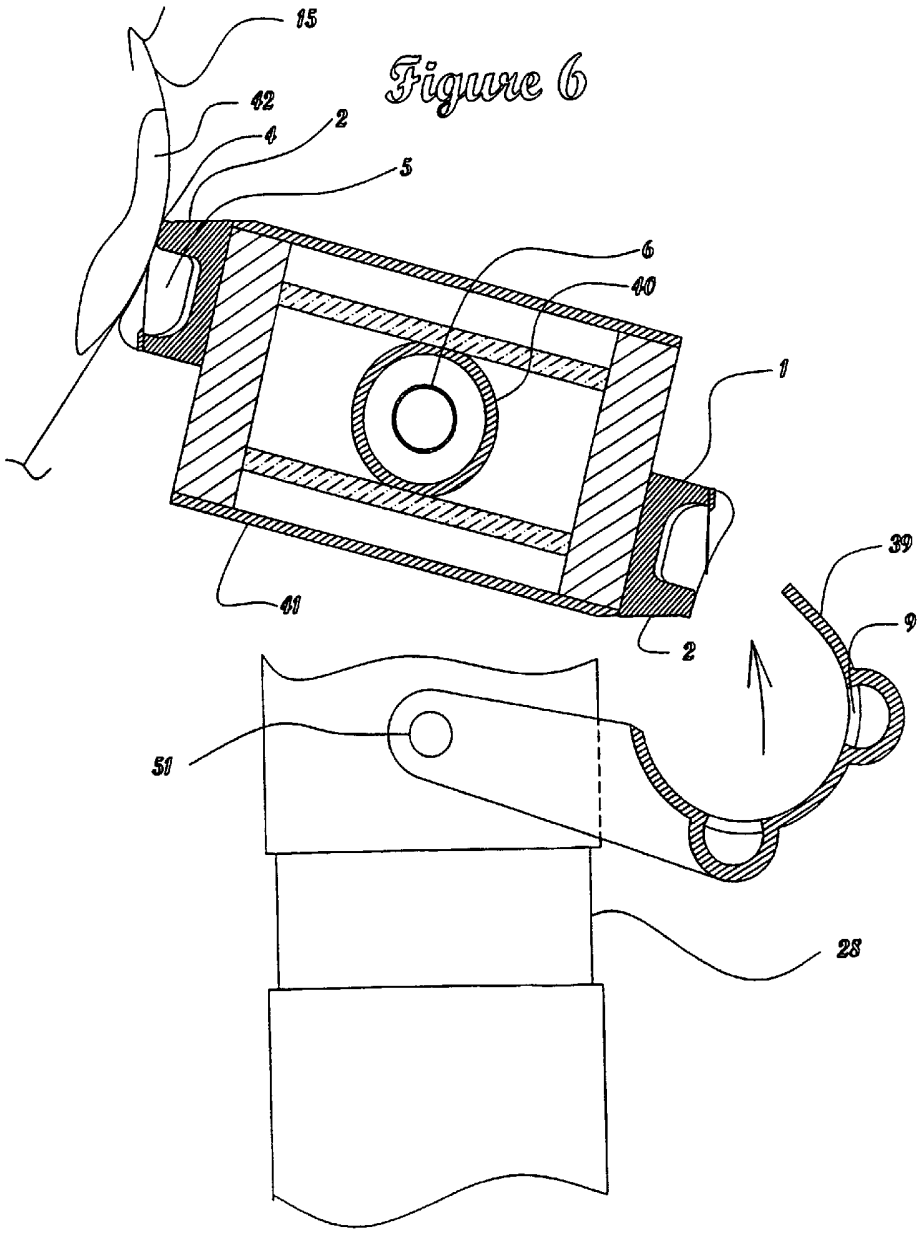

Figure 7

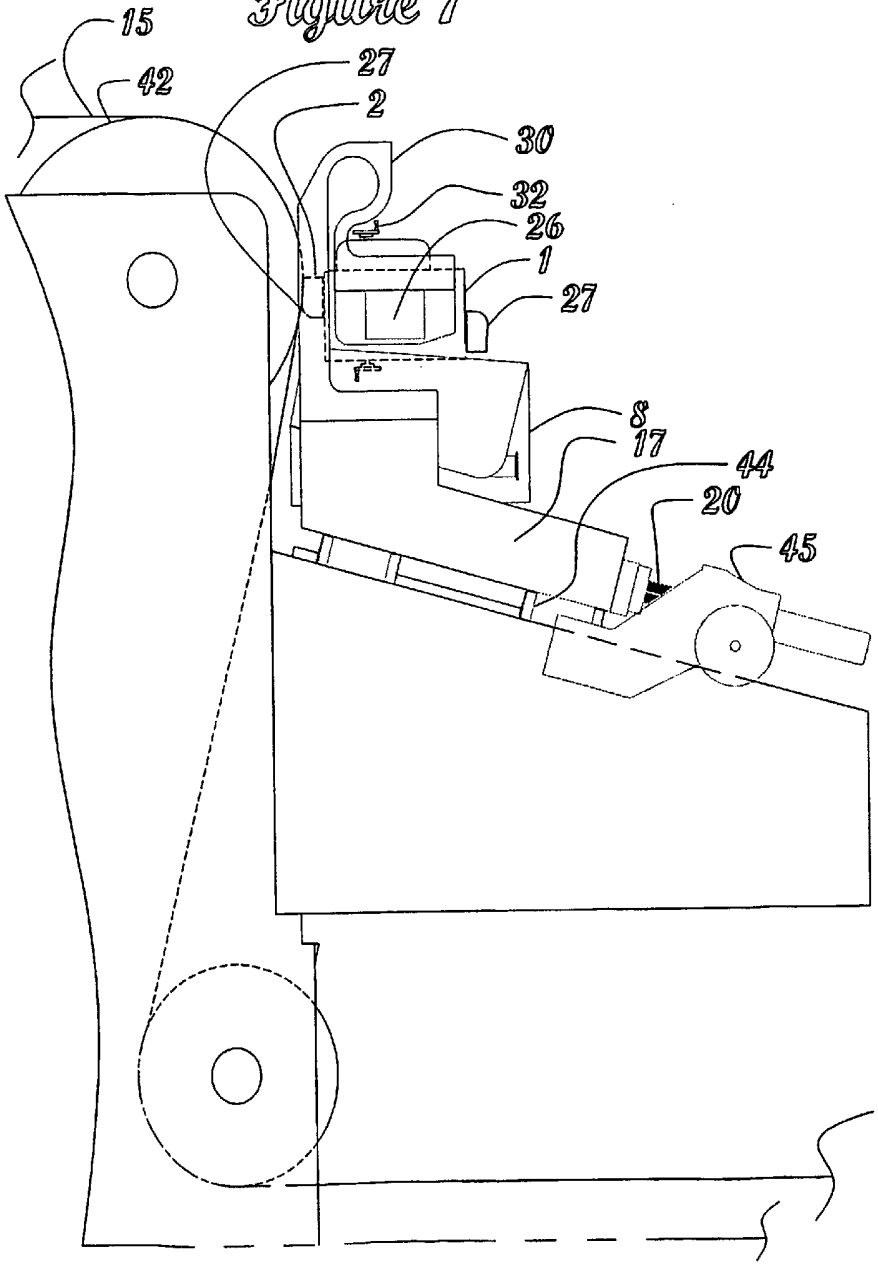

Figure 8

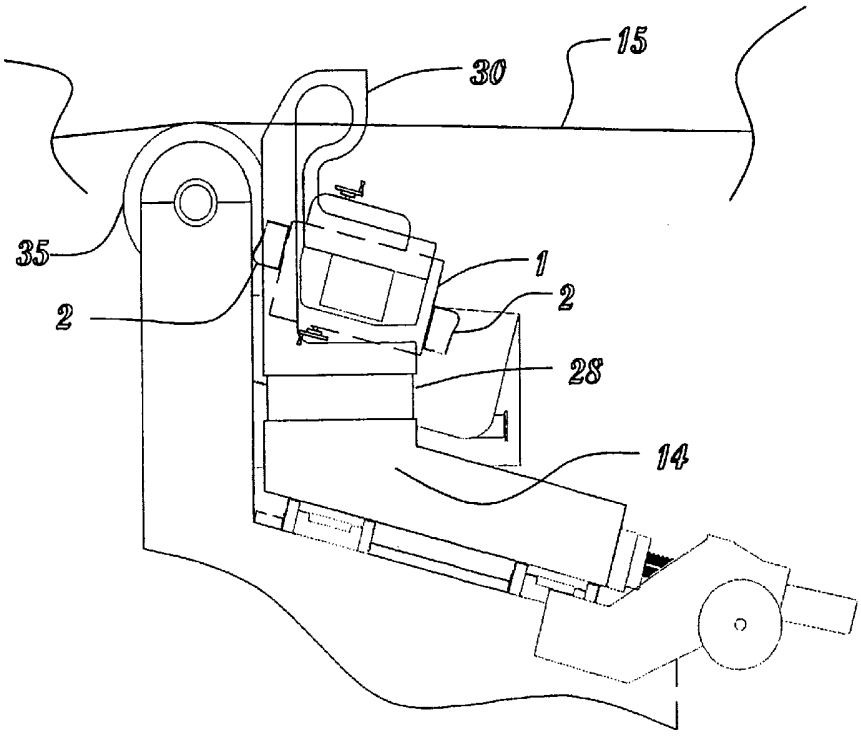

Figure 9

