Feb. 26, 1929. 1,703,251

F. H. SLEEPER

ARMOR OR TUBE FORMING MACHINE

Original Filed May 7, 1925 2 Sheets-Sheet 1

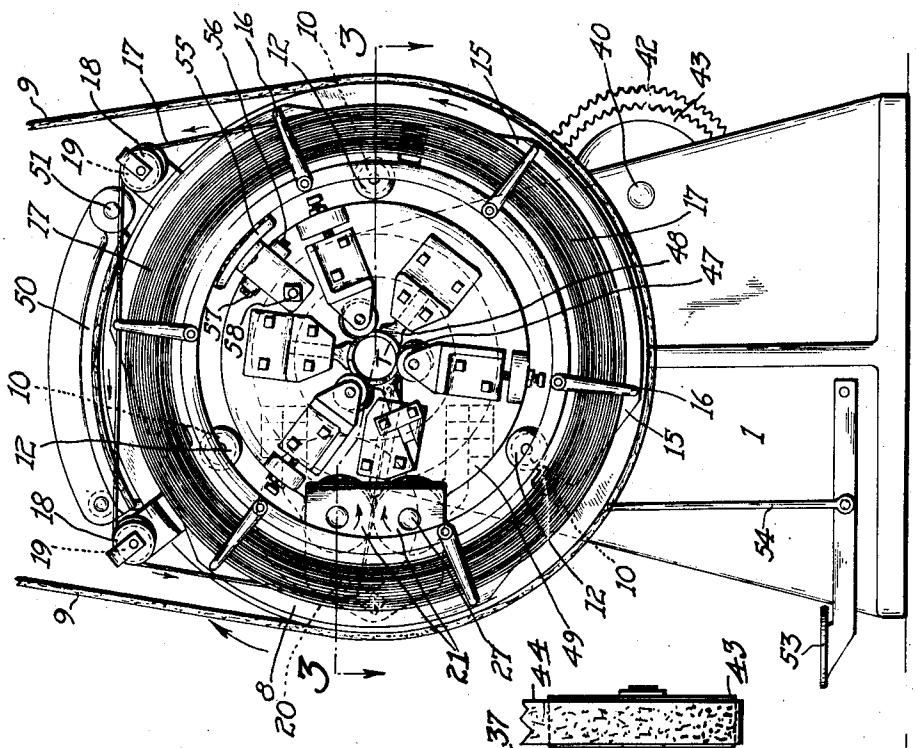

Fig. 1

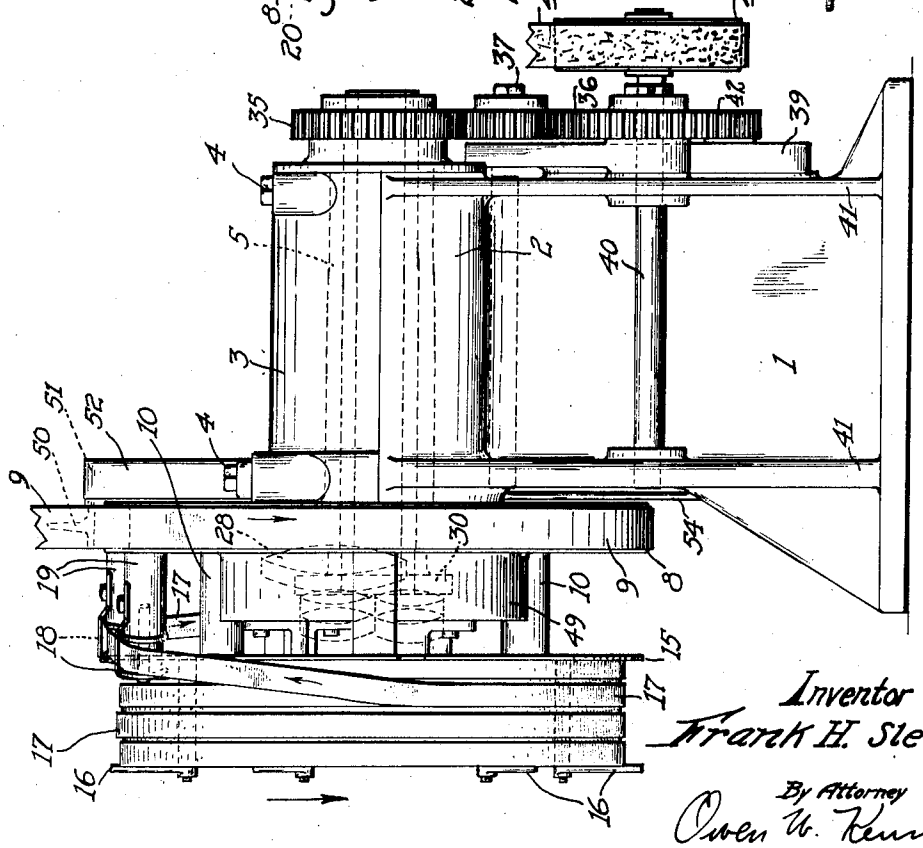

Fig. 2

Inventor
Frank H. Sleeper:
By Attorney
Owen W. Kennedy

Feb. 26, 1929. 1,703,251

F. H. SLEEPER

ARMOR OR TUBE FORMING MACHINE

Original Filed May 7, 1925 2 Sheets-Sheet 2

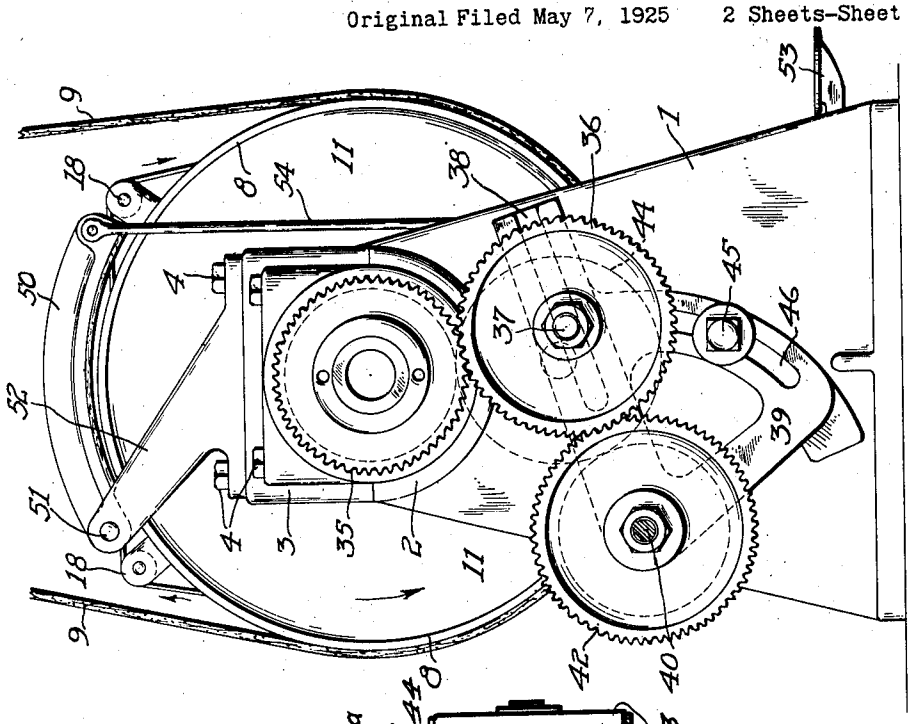

Fig. 4

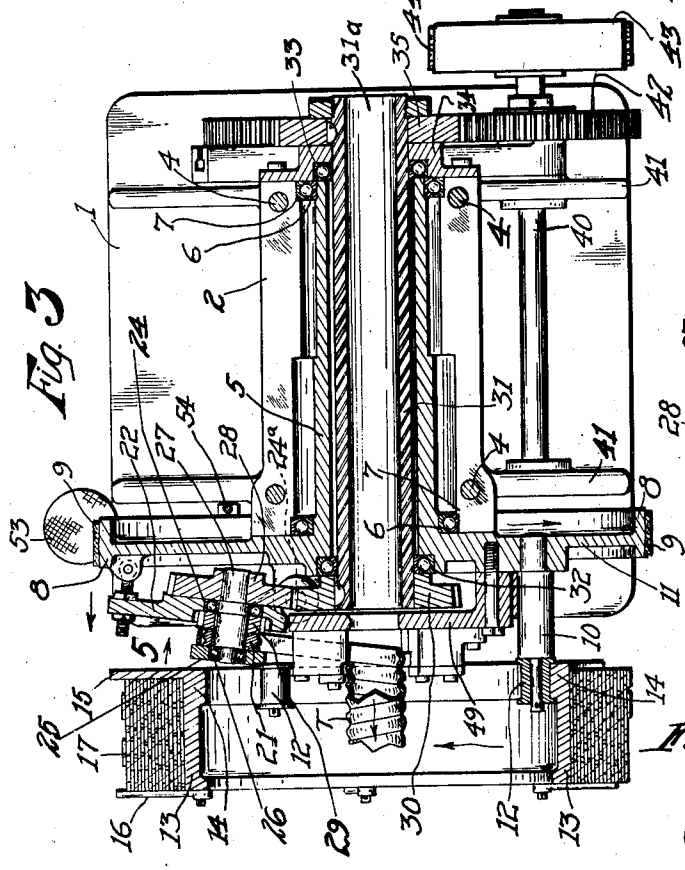

Fig. 3

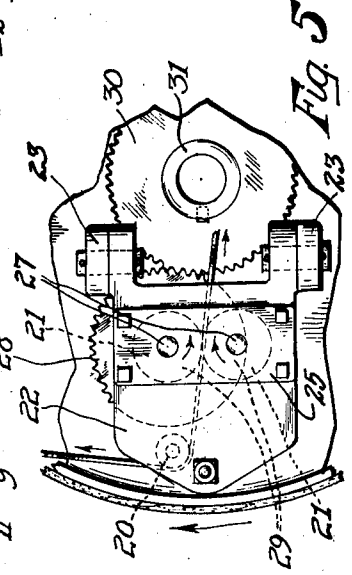

Fig. 5

Inventor
Frank H. Sleeper

By Attorney
Owen H. Kennedy

Patented Feb. 26, 1929. 1,703,251

UNITED STATES PATENT OFFICE.

FRANK H. SLEEPER, OF WORCESTER, MASSACHUSETTS, ASSIGNOR TO SLEEPER & HARTLEY, INC., OF WORCESTER, MASSACHUSETTS, A CORPORATION OF MASSACHUSETTS.

ARMOR OR TUBE FORMING MACHINE.

Application filed May 7, 1925, Serial No. 28,709. Renewed September 26, 1928.

My invention relates to armor or tube forming machines and has for its object to provide an improved machine of the class described which is particularly adapted for the production of flexible metallic armor, or tubular casing, from flat stock, that is, stock which is substantially rectangular in cross section.

In my copending application, Serial No. 611,331, filed January 8, 1923, there is shown and described an armor or tube forming machine comprising a rotatable flier carrying a group of coiling rolls and tools so arranged that when formed stock is positively fed to the coiling rolls and tools at a predetermined rate simultaneously with the revolution of the flier, a tubular casing is formed which is self-supporting, and moves away from the machine without necessitating the use of any takeup devices.

The present invention has to do with a tube forming machine operating on the same general principle as the machine shown and described in the above copending application, and contemplates a reorganization of the parts of the same, whereby the flier is more perfectly balanced during its rotation, whereby the flat stock is conducted to the forming and feeding devices without bending and distorting it, and whereby the stock feeding and forming rolls are driven in a particularly effective manner and are capable of ready adjustment in speed for forming tubing of varying sizes. The above and other advantageous features of my invention will hereinafter more fully appear, reference being had to the accompanying drawings, in which

Fig. 1 is a view in front elevation of a machine embodying my invention,

Fig. 2 is a view in side elevation of the machine shown in Fig. 1,

Fig. 3 is a horizontal sectional view along the line 3—3 of Fig. 1,

Fig. 4 is a view in end elevation, looking at the other end of the machine as viewed in Fig. 1, and

Fig. 5 is an enlarged fragmentary view, illustrating the details of the improved drive of the feeding and forming rolls.

Like reference characters refer to like parts in the different figures.

Referring first to Fig. 1, the machine comprises a pedestal 1, the upper portion of which provides a semi-cylindrical seat 2, with which cooperates a semi-cylindrical cap 3 adapted to be secured to the pedestal 1 in any suitable manner, as by bolts 4. As best shown in Fig. 3, a hollow sleeve 5 extends between the seat 2 and the cap 3 and is rotatably supported near its ends in anti-friction bearings 6, 6, which bearings 6 are positioned by suitable shoulders 7, 7 provided by the seat 2 and cap 3. The sleeve 5 provides at one end an integral concentric flange 8, which is adapted to receive a belt 9 for rotatably driving, from any suitable source of power, the sleeve 5, together with the stock reel and coiling devices, as will now be described, the whole constituting what will be hereinafter termed the flier.

As best shown in Figs. 2 and 3, a plurality of studs 10 extend at right angles from the web 11 of flange 8, and each stud is provided at its end with a grooved roller 12. As best shown in Fig. 1, the several rolls 12 are arranged concentrically about the axis of rotation of the sleeve 5, and serve to rotatably support an annular rim 13, the inner periphery of which provides a projection 14 received in the grooves of the rollers 12. The rim 13 provides a radially extending integral flange 15, and a number of spaced radially extending pivoted fingers 16 cooperate with the flange 15 to confine a bundle of flat stock 17 on the rim 13. In other words, the rim 13, together with its flange 15 and fingers 16, constitute a stock supply reel, concentric about the axis of rotation of the sleeve 5 and so constructed that while the supply of stock tends to turn with the sleeve 5 by reason of its weight, yet the stock reel is capable of slight relative rotative movement with respect to the sleeve 5 by reason of the mounting of the rim 13 on the rollers 12, the advantage of which will hereinafter more fully appear. The pivoted fingers 16 may be turned inwardly, when desired, to permit a bundle of stock 17 to be placed on the rim 13, after which the fingers 16 are turned back to hold the stock on the rim.

As best shown in Fig. 1, the stock 17 is led from the reel over guide rolls 18, 18 mounted on studs 19, 19 projecting from the web 11. The axes of the rolls 18 are slightly inclined, so that the stock 17 in passing over the rolls 18 is displaced laterally with respect to the reel without twisting, as clearly shown in Fig. 2. This displacement enables the stock 17 to pass freely under another guide roll 20 to the stock forming and feeding rolls 21,

which, as best shown in Figs. 3 and 5, are carried by a bracket 22 mounted on lugs 23 projecting from the web 11. The bracket 22 provides bearings 24 and a plate 25 provides bearings 26 for a pair of shafts 27, 27 carrying the forming and feeding rolls 21. One of the shafts 27 is provided with a driving gear 28 which is adapted to drive both the rolls 21 in unison through intermeshing gears 29, also mounted on the shafts 27. The rolls 21 are adapted by their contour to form the stock 17 and, at the same time, to positively feed it at a predetermined rate to the coiling devices, as will be hereinafter described.

As best shown in Figs. 3 and 5, the gear 28 on one of the roll shafts 27 is in mesh with a gear 30, keyed on a hollow sleeve 31 which extends longitudinally through the flier sleeve 5. The sleeve 31 is rotatably supported near one end in an anti-friction bearing 32 carried by the outer sleeve 5, while its other end is supported in an anti-friction bearing 33 carried by an end plate 34 secured to the pedestal 1. The sleeve 31 is thus adapted to rotate within the flier and independently thereof.

The sleeve 31 extends through the end plate 34 and carries a gear 35 which is in mesh with an intermediate gear 36 rotatably mounted on a stud 37. This stud 37 is adjustable within a slot 38 carried by a segment arm 39 pivotally mounted on a countershaft 40, which shaft is journalled between webs 41 of the pedestal 1 for rotation about an axis parallel to the axis of rotation of the flier. The gear 36 is in mesh with a gear 42 carried by the countershaft 40, which is adapted to be driven from a source of power, not shown, in any suitable manner, as for example, by means of a pulley 43 and belt 44.

With the above described gearing, it is obvious that when the countershaft 40 is driven, the gear 35 on the sleeve 31 is driven by the gear 42 through the intermediate gear 36. The gear 30 of the opposite end of the sleeve 31 then drives the gear 28 which in turn drives the feed rolls 21 through the gears 29. The rate at which formed strip is fed by the rolls 21 is obviously determined by the ratio between the gears 35, 36 and 42, and this gearing can be readily changed by reason of the adjustable segment arm 39. The adjustment of the gear stud 37 in the slot 38 enables the axis of the intermediate gear 36 to be shifted with respect to the fixed axes of the sleeve 31 and of the countershaft 40, and the segment arm 39 itself can be angularly adjusted about the countershaft 40 by means of a bolt 45 which is received in a slot 46, also provided in the segment 39. In this way, different sized intermediate gears 36 can be caused to mesh with different sizes of gears on the sleeve 31 in order to vary the speed of the feeding rolls 21.

As previously pointed out, the rolls 21 are adapted to positively feed a formed strip to the coiling devices, which form no part of the present invention, but are preferably arranged substantially as shown and described in my above mentioned copending application. It is sufficient for an understanding of the present invention to state that the formed strip 17 is delivered by the rolls 21 to a group of coiling rolls 47 and coiling tools 48, arranged about the axis of the flier and carried by a plate 49 secured to the web 11. The coiling rolls 47 are arranged about axes inclined with respect to the axis of the tube being coiled, whereby when the coiling devices are driven with the flier and the formed strip is positively fed thereto, a tubular casing T is formed which, as shown in Fig. 3, forces itself outwardly from the plate 49 as the flier rotates.

In the operation of my improved machine, the rotation of the flier causes the feeding and forming rolls 21 to draw off stock 17 from the reel simultaneously with the rotation of the stock supply with the flier and its associated coiling tools. As the stock 17 is drawn off the reel, it is obvious that the pull on the stock tends to turn the reel in the opposite direction of rotation with respect to the flier, and this rotative tendency is taken care of owing to the fact that the rim 13 of the reel is mounted on the several rollers 12. The net result of this mounting of the reel is that the stock revolves about the axis of the flier at a rate of revolution slightly less than the rate of revolution of the flier itself. The arrangement of the stock supply symmetrically with respect to the axis of coiling results in a balance of the entire machine and it has been found that the stock supply, in effect, tends to act as a flywheel and thereby insures stabilization and smooth running of the whole flier.

When it is desired to bring the flier to rest, a braking force may be applied to the periphery of the flange 8 by means of a brake shoe 50 pivotally mounted at 51 on a bracket 52 and adapted to be operated by means of a foot lever 53 and rod 54. As the flier is thus brought to rest, the tendency for the rim 13 with the stock supply thereon to overrun the flier by reason of its inertia, is opposed by a brake shoe 55, shown in Fig. 1. The shoe 55 is adapted to press radially outward against the inner periphery of the rim 13 and thereby prevent the rim from rotating at a higher rate than the retarded flier, which tendency, if unopposed, would result in unwinding of the stock 17 on the reel. The brake shoe 55 is mounted on a pin 56 received in lugs 57 provided by the plate 49, and a spring, not shown, encircling a stud 58 tends to press the shoe 55 against the rim 13 with sufficient force to prevent the rim from overrunning as the flier comes to rest.

From the foregoing, it is apparent that by my invention I have provided an improved machine for forming tubular casing which is extremely effective in operation, by reason of the fact that the coiling devices and the stock supply rotate substantially as a single unit, with the flier, whereby the machine is maintained in balance. The arrangement for positively driving the feeding and forming rolls 21 by a sleeve rotatable independently of the flier is such that the rolls 21 may be driven for varying amounts of feed by a simple change in the gearing, which can be effected without removing any essential parts of the machine, all of the gearing being readily accessible at the end of the flier opposite to the stock reel.

In the operation of the machine the tube T may be formed to be entirely self-supporting, as shown in Fig. 3, or the tube may be formed on a suitable core, such as a flexible electrical conductor, or cable, to serve as armor for the same. In the latter event, the conductor or cable is led directly through the carrier in the free longitudinal passage 31^a in the inner sleeve 31, which passage 31^a is large enough to receive freely, cable of a size corresponding to the largest tubing which can be formed by the rotating tools. Obviously, the coiling rolls and tools 47 and 48 can be adjusted inwardly toward the central axis of the flier to form tubing of smaller diameter, either with or without a core. The ability of the machine to receive the flexible conductor, or cable, in a passage coinciding with the axis of rotation of the flier and the symmetrical arrangement of the stock supply enables the armor or tubing to be formed readily on the core when provided, without bending, twisting, or other deformation of the cable in its passage to the coiling devices of the machine.

I claim:

1. In a machine of the class described adapted for the production of flexible tubular casing, a balanced flier structure comprising a rotatably supported body portion, an enlarged head portion, rollers carried by said head portion, a strip-carrying drum having an internal peripheral surface rotatably mounted on said rollers whereby to carry the strip concentric to the axis of said flier, and strip feeding and coiling devices adapted to draw off and coil said strip, said coiling devices being located substantially inside said drum to produce the finished casing within said drum.

2. In a machine of the class described adapted for the production of flexible tubular casing, a balanced flier structure comprising a rotatably supported body portion, an enlarged head portion, a hollow drum to carry the strip, said drum being rotatably carried by said head portion, and the strip-carrying surface of said drum being concentric to the axis of rotation of said flier, and strip feeding and coiling devices adapted to draw the strip off the rear edge of said drum and coil the same, feeding the finished casing forwardly, said coiling devices being located substantially inside said drum to produce the finished casing inside said drum.

3. In a machine of the class described adapted for the production of flexible tubular casing, a balanced flier structure comprising a rotatably supported body portion, an enlarged head portion, a belt-receiving surface on said head portion, a hollow drum to carry the strip, said drum being rotatably carried by said head portion and the strip-carrying surface of said drum being concentric to the axis of rotation of said flier, and strip feeding and coiling devices adapted to draw off and coil said strip, said coiling devices being located substantially inside said drum to produce the finished casing within said drum.

4. In a machine of the class described, a balanced flier structure comprising a rotatably supported body portion having at one end an enlarged head portion carrying a supply of strip concentric about the axis of rotation of the flier, means for applying a rotative driving force to said flier, a pair of strip feeding and forming rolls carried by the head portion, a sleeve rotatably supported within the body portion and coaxial therewith, gearing connecting one end of said sleeve to said rolls, and gearing at the other end of said sleeve for rotatably driving said sleeve independently of said flier structure.

5. In a machine of the class described, a balanced flier structure comprising a rotatably supported body portion having at one end an enlarged head portion carrying a supply of strip concentric about the axis of rotation of the flier, means for applying a rotative driving force to said flier, a pair of strip feeding and forming rolls carried by the head portion, a sleeve rotatably supported within the body portion and coaxial therewith, gearing connecting one end of said sleeve to said rolls, and change gearing connected to the other end of said sleeve beyond said body portion, whereby said rolls may be positively driven at a predetermined rate of speed independently of the rate of rotation of the flier structure.

Dated this fifth day of May, 1925.

FRANK H. SLEEPER.