C. B. VAN ANTWERP.

EXPANSION BOLT.

APPLICATION FILED AUG. 16, 1911.

1,076,175. Patented Oct. 21, 1913.

Fig. 1.

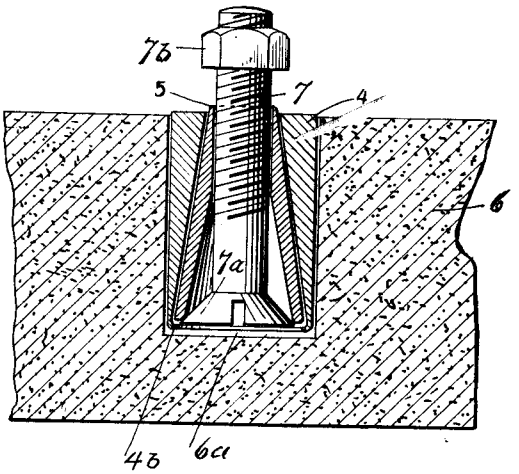

Fig. 2.

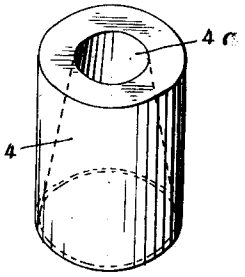

Fig. 3.

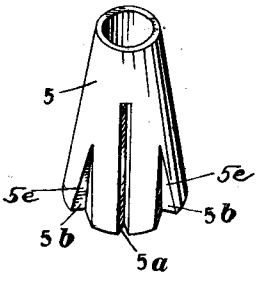

Fig. 4.

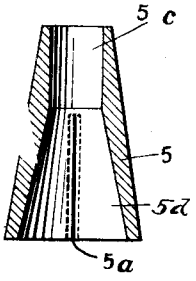

Witnesses:

M. H. Eichelman.

M. A. Milord

Inventor:

Clarence B Van Antwerp

By Frederick Benjamin

Atty

UNITED STATES PATENT OFFICE.

CLARENCE B. VAN ANTWERP, OF CHICAGO, ILLINOIS.

EXPANSION-BOLT.

1,076,175. Specification of Letters Patent. Patented Oct. 21, 1913.

Application filed August 16, 1911. Serial No. 644,404.

To all whom it may concern:

Be it known that I, CLARENCE B. VAN ANTWERP, citizen of the United States, residing at Chicago, in the county of Cook and State of Illinois, have invented certain new and useful Improvements in Expansion-Bolts, of which the following is a specification.

This invention relates to improvements in expansion bolts of the type adapted to be inserted in cement or brick work and to form the anchoring means for some object or device connected therewith.

The especial object of the improvements embodied herein is to produce an expansion bolt of extremely simple form and economical construction having but two parts which expand when pressure is applied thereto by a bolt of common construction.

In the accompanying drawing which forms a part of my application, I have shown a preferred embodiment of my improvements in the following views:—

Figure 1 is a sectional view showing my improved anchoring device in position in a section of concrete or similar material. Fig. 2 is a perspective view of the outer shell of my anchoring device; Fig. 3 is a perspective view of the inner member or conical plug, and—Fig. 4 is a vertical section through the conical plug.

Referring to the details of the drawing, 6 represents a portion of material in which my expansion device is placed a recess or socket 6^a being formed therein in any suitable manner. This recess is of sufficient size to receive with a snug fit a cylindrical shell 4 which is cast of metal that will expand or stretch under pressure. The bore 4^a of the shell is formed tapering with the smaller diameter at the outer end and the greater diameter at the inner end is so proportioned as to leave the surrounding wall at said end sufficiently thin to permit said edge to be turned inwardly by any suitable tool to form an inturned flange 4^b.

5 represents a trunco conical plug having a straight bore 5^c extending for a portion of the length of the plug and a tapering bore 5^d extending the rest of the length of the plug. Longitudinal slots 5^a are formed in the opposite side walls of the plug and communicate with the tapering bore 5^d. Between these slots notches, V-shaped in cross section, are formed in the side walls of the plug 5, said notches being tapering so that their greatest diameter is at the inner end of the plug. The walls of the plug adjacent these notches provide angular shoulders 5^b for the purpose to be described.

7 represents an ordinary stove bolt having a conical head 7^a and provided with the usual nut 7^b.

In assembling the parts of my device the plugs 5 are inserted in the bore of the shell 4 and the flanges 4^b are then formed so as to retain the plug in its proper relation to the shell in which position the outer end of the plug will project slightly beyond the outer end of the shell 4 as indicated in Fig. 1. The bolt 7 is then inserted in the plug so that the head of the bolt is at the inner end of the latter and the outwardly flaring surface of the bolt head impinges against the inner end of the plug. The nut 7^b is then applied to the threaded end of the bolt in the usual manner and the device is ready for use.

In applying the device the shell 4 is inserted in the hole provided therefor in the foundation, the nut 7^b is removed and a suitable tool such as a piece of pipe is placed over the bolt and the outer end of the plug 5 so that the end of the tool rests upon the outer end of the shell 4. The tool is given several sharp blows with a hammer with the result that the soft metal of which the shell 4 is formed expands laterally sufficiently to frictionally engage the side walls of the opening 6^a. The article to be attached or held by the bolt is then placed over the latter and the nut 7^b is restored to its place on the bolt and by screwing down the nut the head 7^a of the bolt is drawn outwardly and thereby expands the lower portion of the side walls of the conical plug 5 and the pressure continued the plug in turn expands the thin inner portion of the walls of the shell thereby effectively anchoring the shell in the foundation material 6.

It will be understood that the plug as well as the shell are cast from metal that will stretch or yield readily under pressure and at the same time will have sufficient tensile strength to prevent the pulling out of the bolt.

The plug is prevented from turning within the shell 4 by the engagement of the sharp shoulders 5^e with the inner walls of the

shell and slots 5^a facilitate the expansion of the plug under pressure exerted by the outward movement of the head of the bolt 7.

Having thus described my invention, I claim:—

An expansion device comprising a one-piece cylindrical shell of ductile material, having a conical bore with its inner end inwardly flanged, a trunco-conical non-threaded plug arranged within said shell and having its inner and outer walls trunco-conical and of substantially uniform thickness throughout their length and provided with longitudinal slots extending from its inner edge for a substantial portion of the longitudinal diameter of said plug, and a bolt having a trunco-conical head, said bolt extending through said plug with the outer edges of said head engaging the inner edge of said plug and adapted to expand said plug upon the bolt being drawn inwardly relative to said plug.

In testimony whereof I affix my signature in the presence of two witnesses.

CLARENCE B. VAN ANTWERP.

Witnesses:

A. F. WALSH,

L. E. VAN REETH.