United States Patent [19]

Moroto et al.

[11] **3,819,885**

[45] **June 25, 1974**

[54] **TIME DELAY SWITCH DEVICE**

[75] Inventors: **Kaoru Moroto; Isao Suzuki,** both of Nagoya, Japan

[73] Assignee: **Zenkosha Tokie Kabushiki Kaisha,** Aichi Prefecture, Japan

[22] Filed: **Dec. 14, 1972**

[21] Appl. No.: **315,190**

[30] **Foreign Application Priority Data**

Dec. 16, 1971 Japan.....46-102382

[52] **U.S. Cl.** ..... **200/35 R,** 200/33 R, 200/37 R, 200/40

[51] **Int. Cl.** **H01h 7/08,** H01h 43/00

[58] **Field of Search** ... 200/33 R, 35 R, 35 W, 37 R, 200/37 A, 38 R, 38 F, 38 FB, 39 R, 40

[56] **References Cited**

UNITED STATES PATENTS

2,313,569	3/1943	Muntheser	200/35 R
3,117,191	1/1964	Page	200/39 R
3,242,663	3/1966	Castille	200/39 R X
3,260,807	7/1966	Rulseh et al.	200/38 FB
3,267,659	8/1966	Hancock	200/38 F X
3,715,880	2/1973	Simons	200/35 W X

Primary Examiner—James R. Scott

Attorney, Agent, or Firm—Waters, Roditi, Schwartz & Nissen

[57] **ABSTRACT**

A time delay switch device using a mechanical clock means consisting of a spiral spring and gearings. The actual on or off operation takes place by actuating a switch button but with a given time delay from the actuation.

6 Claims, 19 Drawing Figures

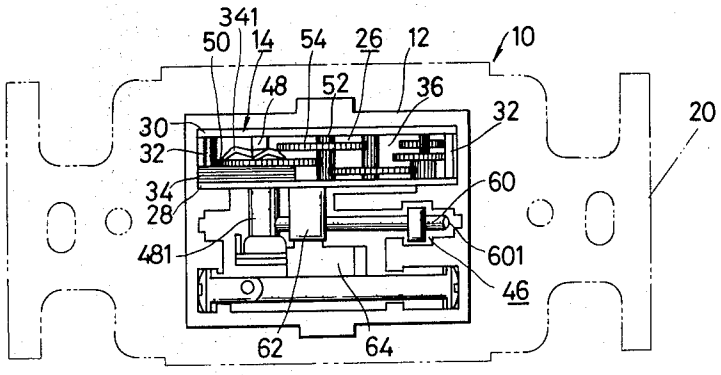

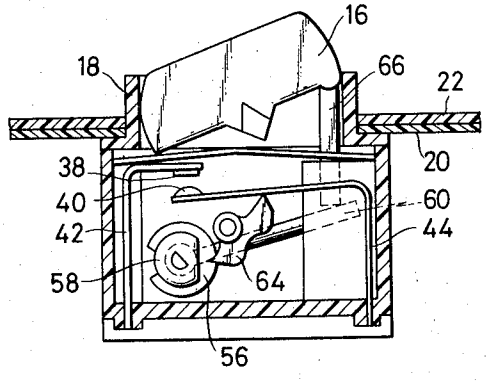

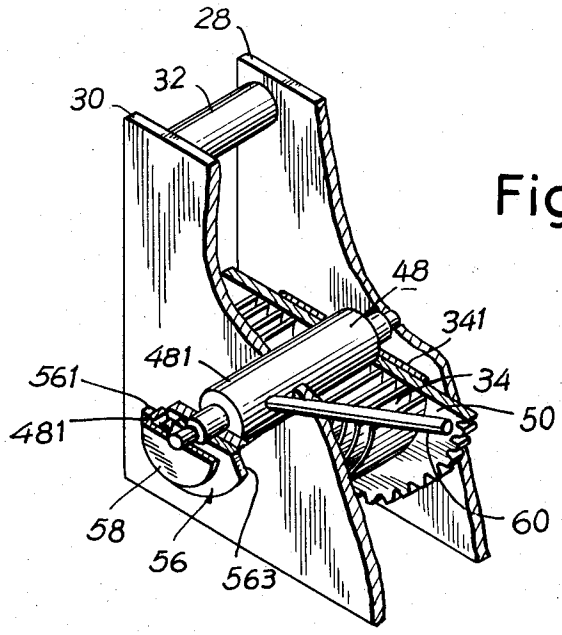
28
32
30
48
341
481
561
34
481
50
60
58
56
563

Fig.1

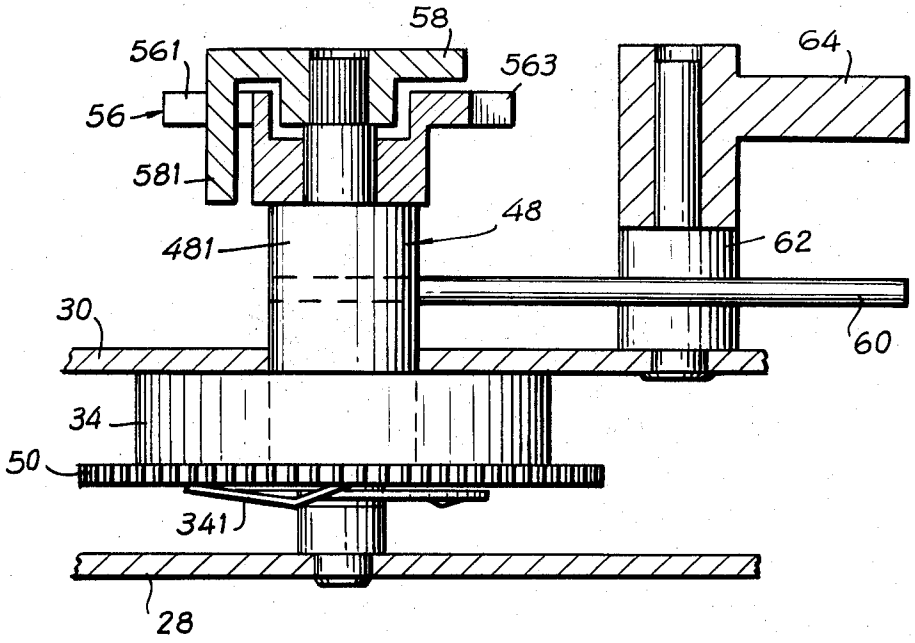
58
561
563
64
56
581
48
481
62
30
60
34
50
341
28

Fig.2

Fig.1A

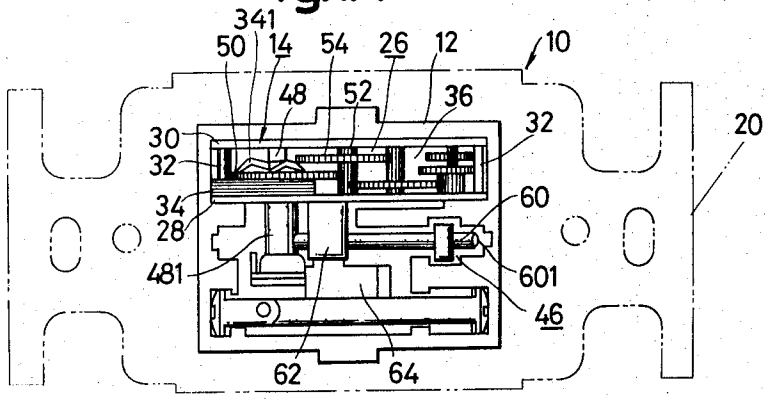

Fig.1B

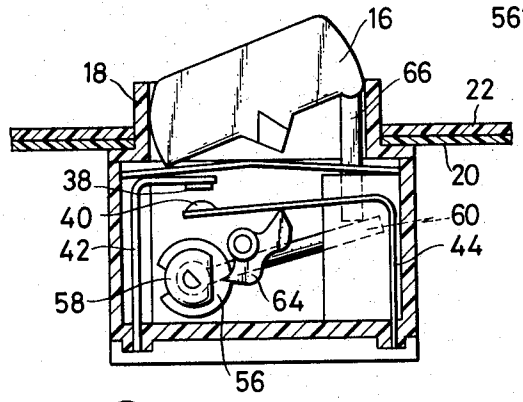

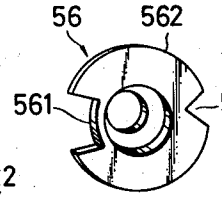

Fig.1D

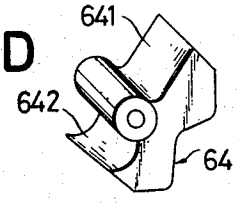

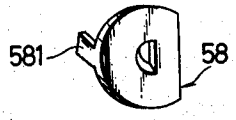

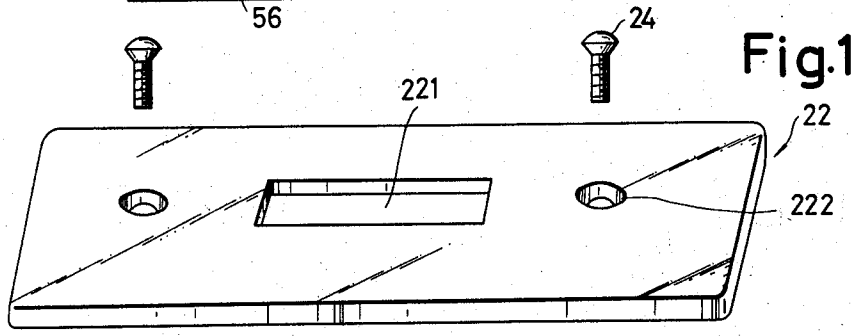

Fig.1C

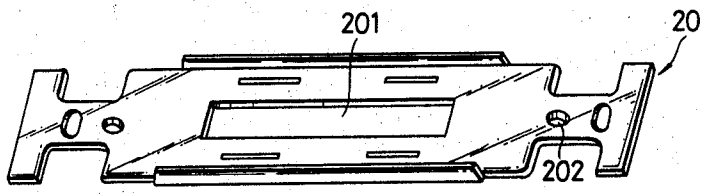

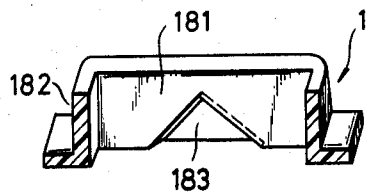

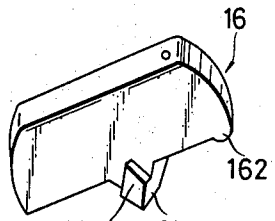

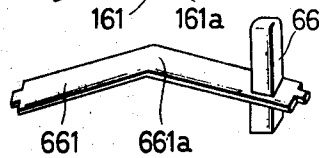

Fig. 1E

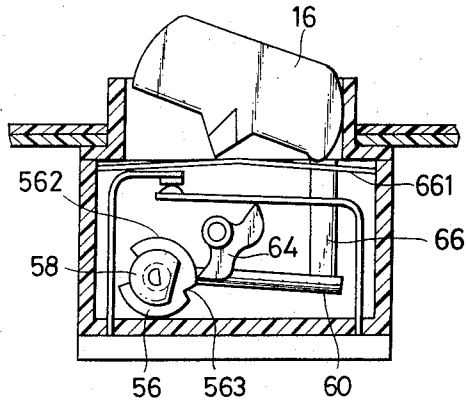

Fig. 2B-1

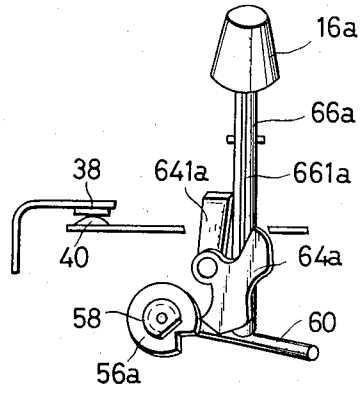

Fig. 2A-1

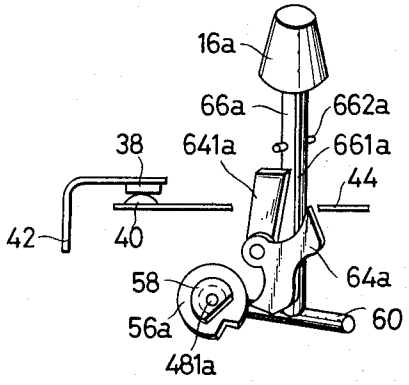

Fig. 2A-2

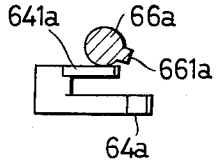

Fig. 2B-2

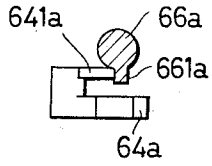

Fig. 3A

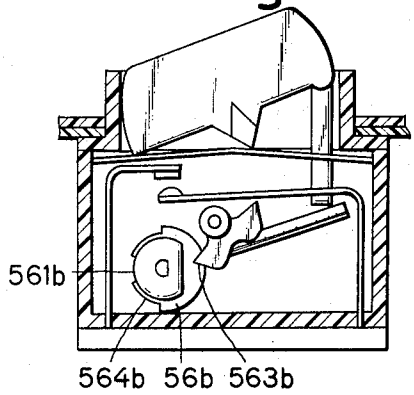

Fig. 3B

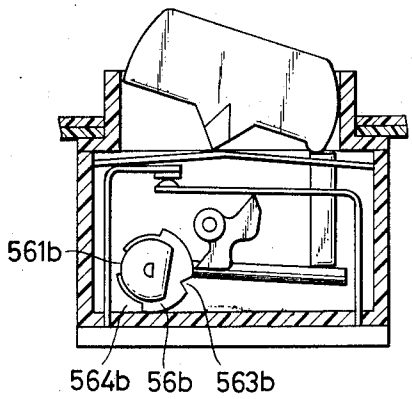

Fig. 4A

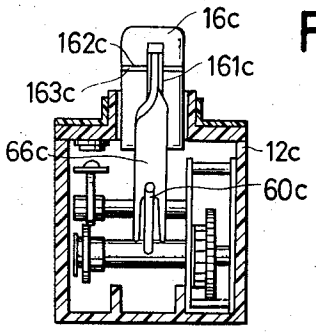

Fig. 4B

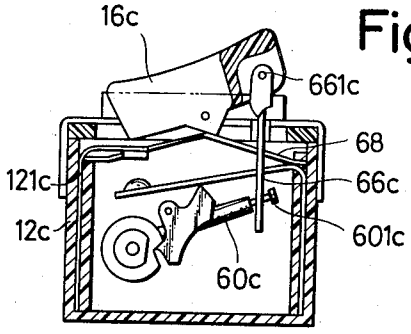

Fig. 4C

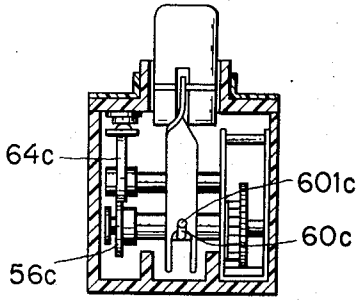

Fig. 4D

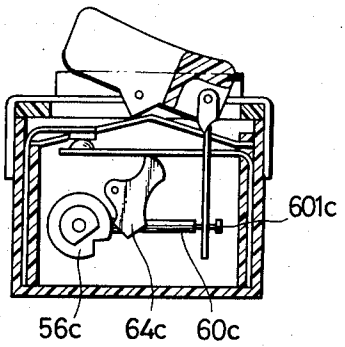

Fig. 5

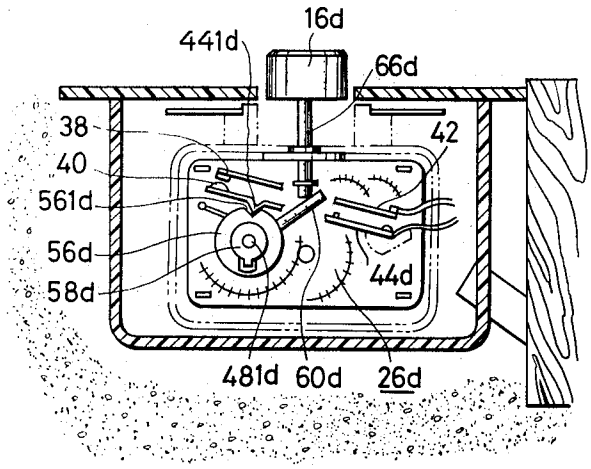

Fig. 6

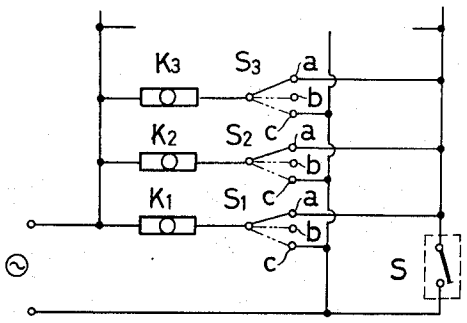

TIME DELAY SWITCH DEVICE

BACKGROUND OF THE INVENTION

1. Field of the Invention

This invention relates to a switch device, and more particularly to a so-called time delay switch device which manually or automatically carries out turn-on or turn-off operation with a certain time delay after such operation is ordered to the switch device by actuation of a switch button or the like.

2. Description of the Prior Art

There are several types of time delay switches for manual or automatic control of illumination and industrial processes: namely, a type which provides a desired time delay by using a time constant of an electric circuit including a capacitor and a resistor, a type which provides a controllable delay time by adding a suitable regulator to the capacitor-resistor circuit for varrying the time constant thereof, and a type which provides a certain time delay by using a bimetal element.

The capacitor-resistor type time delay switch has a shortcoming in that its accuracy of delay time is comparatively low and a long delay time is difficult to achieve. In an additional regulating circuitry is added to the capacitor-resistor type time delay switch for overcoming the aforesaid shortcoming, it is usually necessary to use electronic elements therein, so that the time delay switch of the type becomes bulky and costly. The bimetal type time delay switch has a shortcoming in that its accuracy of delay time is comparatively low and the set delay time of the bimetal element tends to fluctuate as time elapses. Accordingly, the stability of the bimetal type time delay switch is rather low.

Therefore, an object of the present invention is to obviate the aforesaid difficulties of the conventional time delay switches, by providing an improved time delay switch device.

SUMMARY OF THE INVENTION

In a time delay switch device according to the present invention, a mechanical timer element is used, together with a means for setting the delay time of the timer element. The timer element is mechanically operatively connected to a movable electric contact, which selectively engages a cooperating stationary electric contact. Whereby, upon elapse of a delay time set on the mechanical timer, the electric circuit between the movable contact and the stationary contact is turned on or turned off, depending on the set-up of the switch.

A specific object of the present invention is to provide a highly accurate and reliable time delay switch device at a low cost, which uses a mechanical timer element without using any electric or electronic delay element, while ensuring ability to allow setting of the delay time over a wide range, inclusive of a very long delay time.

Another object of the present invention is to provide a time delay switch device of the aforesaid type, which can be constructed in a small size, whereby the time delay switch device may be applied to various industrial uses.

DESCRIPTION OF THE ACCOMPANYING DRAWING

Other objects and advantages of the present invention may be appreciated by referring to the following description, taken in conjunction with the accompanying drawings, in which:

FIG. **1** is a perspective view with parts broken away, of the assembled device of the present invention;

FIG. **1A** is a schematic plan view, illustrating the inner structure of a first embodiment of the time delay switch device according to the present invention;

FIG. **1B** is a sectional view of the device shown in FIG. **1A**;

FIG. **1C** is an exploded perspective view of a switch actuating button and a tread member of the switch device of FIG. **1A**;

FIG. **1D** is an exploded perspective view of a cam mechanism for regulating delay time in the switch of FIG. **1A**;

FIG. **1E** is a view similar to FIG. **1B**, showing a different operative position of the switch device;

FIG. **2** is a sectional view showing the structural details of the spring winding mechanism of the device of FIG. **1**;

FIG. **2A–1** is a schematic perspective view of a second embodiment of the time delay switch device according to the present invention, shown in a just turned-on state;

FIG. **2A–2** is a fragmentary sectional view of the relation between a tread member and a stopper thereof, for the condition as shown in FIG. **2A–1**;

FIG. **2B–1** is a schematic perspective view of the switch device of FIG. **2A–1**, shown in a continuous switchedon state;

FIG. **2B–2** is a view similar to FIG. **2A–2**, for the conditions of FIG. **2B–1**;

FIGS. **3A** and **3B** are sectional views, showing a third embodiment of the time delay switch device of the present invention, using a different cam structure;

FIGS. **4A** and **4B** are a partially cut away end view and a partially cutaway side view, respectively, showing the turned-off condition of a fourth embodiment of the time delay switch device of the present invention;

FIGS. **4C** and **4D** are views similar to FIGS. **4A** and **4B**, respectively, showing the turned-on condition of the fourth embodiment;

FIG. **5** is a partially cut away side view of a fifth embodiment of the time delay switch device according to the present invention, illustrating inner structure thereof; and

FIG. **6** is a circuit diagram for controlling electric loads at different floors of a multi-storied building, such as illuminations thereof, while using a time delay switch according to the invention.

DETAILED DESCRIPTION OF THE PREFERRED EMBODIMENTS

Referring to FIGS. **1A** to **1E**, reference numeral **10** represents a first embodiment of the time delay switch device according to the present invention, which includes a casing **12**, a time delay switch mechanism **14** disposed in the casing, a switch button **16** or the like for actuating the switch mechanism, a lid **18** of the casing **12**, a lid-holding plate **20**, and a decorative plate **22**. The lid **18** has an opening **181** for allowing the switch button **16** to extend therethrough, which opening **181**

is surrounded by projecting walls **182.** The lid-holding plate **20** and the decorative plate **22** have aligned openings **201** and **221** through which the projecting walls **182** extend. The casing **12** with the switch mechanism **14** is, for instance, installed in a building wall, and then the switch button **16,** the **18,** and the lid-holding plate **20** are mounted thereon. The decorative plate **22** is placed on the lid-holding plate **20,** and the entire time delay switch device **10** is fastened to a suitable holding member (not shown) of the building wall by means of screws **24** penetrating through holes **202** and **222** of the lid-holding plate **20** and the decorative plate **22.** The holding means (not shown) is, of course, separatively fastened to the building wall for receiving the time delay switch device **10.** The decorative plate **22** is to enhance the attractive appearance of the switch device **10,** and it can be dispensed with if so desired.

Referring to FIG. **1A,** the time delay switching mechanism **14** is disposed between an outer frame **30** and an inner frame **28,** which frames are carried by a pair of supports **32, 32.** The time delay switch mechanism **14** comprises a clock means **26** having a spiral spring **34** and a gearing means **36;** conductors **42, 44** extending through the casing **12;** electric contacts **38** and **40** secured to free ends of the conductors **42** and **44;** and a delaying operation means **46** which, in response to the actuation of the switch button **16,** winds upt the spiral spring **34** so as to cause the actual making or breaking of an electric circuit between the electric contacts **38** and **40** only after a certain delay time from the moment of actuating the switch button **16.** The delay time is produced by allowing the spiral spring **34** to unwind by itself after the aforesaid winding up by the delaying operation means **46.**

The clock means **26** includes a main or first shaft **48** on which a main gear **50,** the spiral spring **34** and a stopper **341** for the spring **34** are mounted. One end of the spiral spring **34** is secured to a shaft fixed to the frames **28, 30** and the other end is mechanically connected to the main shaft **48** through the stopper **341** fixed to the latter. The clock means **26** also includes a plurality of geared shafts **52** each of which is rotatably journaled to the inner and outer frames **28, 30** at each end and carries a gear **54,** so that the main gear **50** mounted on the main shaft **48** meshes with the first geared shaft. The first gear fixedly mounted on the first geared shaft meshes with the second geared shaft. The second gear fixedly mounted on the second geared shaft meshes with the third geared shaft and so on.

The main gear **50** can rotate in one direction by the releasing action of the spring **34** due to the stopper **341** which releasably engages with the main gear **50** but does not rotate in another direction, since the gear **50** meshes with the gearings **52, 54** and thus has a high frictional resistance. The structure of the clock means **26** per se is known and does not constitute the subject matter of the present invention, so that further details of the clock means **26** will be dealt with here.

The first shaft **48** of the clock means **26** has an extended portion **481,** which extends into the inner frame **28** and carries a fixed cam **58** secured thereto. A rotatable cam **56** is rotatably fitted on the extended shaft portion **481** so as to engage a part of said fixed cam **58.** Referring to IG. the fixed cam **58** has a projection **581** which operatively engages the rotatable cam **56** at a notch **561** thereof. Referring to FIGS. **1A, 1D,** and **1E,** a lever **60** is secured to the extended portion **481** of the main shaft **48,** so that the lever **60** radially extends from the extended shaft portion **481.** When the free end **601** of the lever **60** is pressed downward, as seen in FIG. **1B,** the extended shaft portion **481** and the main shaft **48** are turned in such a manner that the spiral spring **34** is wound up by the actions of the main gear **50** and spring stopper **341** in usual manner. A stud **62** is provided within the inner frame **28** of the clock means **26,** so as to swayably hold a swing cam **64** at one end thereof, as shown in FIGS. **1A, 1B,** and **1E.** The swing cam **64** has an upper edge **641** engaging a part of the conductor **44** and a lower edge **642** engaging either cam surface **562** or cam notch **563** of the rotatable cam **56,** as can be seen from FIGS. **1B** and **1D.**

At the free end of the extended shaft portion **481** of the main shaft **48,** there are provided two portions decreased in diameter. The first portion is larger in diameter than the second one and carries the rotatable cam **56** and the second portion carries the fixed cam **58,** so that the axial movement of the rotatable cam **56** can be prevented.

Referring to FIG. **1C,** a tread member **66** is provided for transmitting the movement of the switch button **16** to the lever **60.** The switch button **16** has wedge-shaped projections **161** which swingably engage V-shaped notches **183** of the lid **18.** The tread member **66** has a leaf spring **661** which is mounted on the casing **12** of the time delay switch **10.** Thus, the switch button **16** acts as a tumbler switch knob. To ensure smooth movement of the tread member **66,** a small projection **162** is formed at one end of the tumbler switch button **16,** as shown in FIG. **1C.**

The operation or function of the time delay switch device of the present invention will now be described by referring to FIGS. **1B** and **1E.** When the time dealy switch **10** is in turned-off state, as shown in FIG. **1B,** if the right-hand side of the tumbler switch button **16** is depressed, the tread member **66** moves downward for causing the lever **60** to swing clockwise. Whereby, the extended portion **481** of the main shaft **48** turns in such a direction that the spiral spring **34** (FIG. **1A**) is wound up. Prior to the aforesaid depression of the right-hand side of the tumbler switch button **16,** a pointed lower edge **161***a* of wedge-shaped projection **161** of the button **16** is placed to the right of a central bent portion **661***a* (FIG. **1C**) of the tread member **66,** as shown in FIG. **1B.** Upon the aforesaid depression, the pointed lower edge **161***a* of the wedge-shaped projection **161** moves to the left of the central bent portion **661***a* of the leaf spring **661** of the tread member **66,** so that the button **16** is stably held at the rightwardly-swung position, as shown in FIG. **1E.** In response to the clockwise rotation of the extended portion **481,** the fixed cam **58** secured thereto forces the rotatable cam **56** to turn clockwise. As a result, the lower edge **642** of the swing cam **64,** which has been placed in the notch **563** of the rotatable cam **56,** now leaves the notch **563** and moves to the cam surface **562.** Thus, the swing cam **64** is forced to swing in a counterclockwise direction, as seen in FIG. **1B,** so that the upper edge **641** acts to force the conductor **44** upward for bringing the movable contact **40** secured thereto to the cooperating stationary contact **38** connected to the other conductor **42.** Whereby, the circuit between the conductors **42** and **44** is completed as shown in FIG. **1E.**

The operation of the time delay switch **10** from the turned on position of FIG. **1E** to the turned-off position

of FIG. 1B will now be described. As the left-hand side portion of the tumbler switch button **16** is depressed, it swings from the rightwardly-swung position of FIG. 1E to the left-wardly-swung position of FIG. 1B, so that the tread member **66** is freed from depressing forced which has previously been applied thereto by the right-hand end portion of the switch button **16.** At the same time, the previously wound-up spiral spring **34** (FIG. 1A) begins to gradually unwind itself. Resistance is provided against the unwinding of the spiral spring **34** by secondary gears shafts **52** through the secondary gears **54** and the main gear **50** secured to the main shaft **48,** so that the unwinding of the spring **34** and the counterclockwise rotation of the main shaft **48** are declerated.

In response to this declerated rotation of the main shaft **48** caused by the unwinding of the main spiral spring **34,** the extended portion **481** also gradually rotates in a counterclockwise direction, so as to gradually raise the free end of the lever **60** from the lowermost position thereof. At the same time, the rotatable cam **52** is also gradually sturned counterclockwise by the extended portion **481** of the main shaft **48.** The swing cam **64** is, however, held stationary as long as the lower edge **642** of the cam **64** engages the cam surface **562** of the rotatable cam **56.** Whereby, the upper edge **641** of the swing cam **64** acts to keep the conductor **44** as urged upward so as to maintain the electric circuit between the contacts **40** and **38** as closed. When the extended portion **481** turns to such an extent that the rotatable cam **56** causes the lower edge **642** of the swing cam **64** to move from the cam surface **562** to the notch **563** of the rotatable cam **56,** the swing cam **64** suddenly turns in a clockwise direction, so that the upward urging of the conductor **44** by the upper edge **641** of the swing cam **64** is released. The conductor **44** is biased by a suitable means, e.g., by the elasticity thereof, in such a direction that, upon release of the upward urging, the conductor **44** swings downward for separating the movable contact **40** away from the stationary contact **38.** Thereby, the electric circuit between the contacts **38** and **40** of the time delay switch device **10** is interrupted, as shown in FIG. 1B.

With the embodiment of FIGS. 1A to 1E, the actuation of the tumbler switch button **16** from its turned-off position to its turned-on position results in an immediate closing of the electric circuit between the stationary contact **38** and the movable contact **40,** while winding up the spiral spring **34** of the clock means **26.** On the other hand, the turning of the tumbler switch button **16** from its turned-on position to its turned-off position does not cause immediate separation of the movable contact **40** from the stationary contact **38,** but the actual separation of the two electric contacts **38** and **40** is delayed from the actuation of the switch button **16** to the off position by a time period which is necessary for the rotatable cam **56** to turn by a predetermined angle and which is a function of the extent of the winding-up of the main spring **34** and resistance caused by the secondary gears **54** and the secondary shafts **52.**

FIGS. **2A–1, 2A–2, 2B–1,** and **2B–2** illustrate a second embodiment of the time delay switch device according to the present invention. In the second embodiment, the functions which are accomplished by the tumbler switch button **16** of the first embodiment are carried out by a simple push button **16*a***, without using any tumbler switch button. The push button **16*a*** is carried by a tread member **66*a***, which includes a solid cylindrical rod having a linear ridge **661*a*** projecting radially outwardly from the cylindrical rod and extending in parallel with the axial center line of the rod, and a detent **662*a*** secured to the cylindrical rod at such position that the detent **662*a*** engages a lid (not shown) of the time delay switch for preventing the tread member **66*a*** from moving away from the switch.

A swing cam **64*a*** of this second embodiment includes a stopper **641*a***, which selectively engages the linear ridge **661*a*** of the tread member **66*a***. In the second embodiment, an extended portion **481*a*** of a main shaft **48** carries a lever **60** and a fixed cam **58** which are both identical to the similarly numbered lever and cam of the first embodiment. The rotatable cam **56*a*** of the second embodiment is similar to the rotatable cam **56** of the first embodiment, except that a groove (not shown) engaging the fixed cam is not formed on the periphery but at the main body thereof.

The operation of the second embodiment of the invention will now be described by referring to FIGS. **2A–1, 2A–2, 2B–1,** and **2B–2.** FIGS. **2A–1** and **2A–2** illustrate the push button **16*a*** at its depressed position. Being depressed, the tread member **66*a*** acts on the lever **60** at the buttom end thereof, so as to turn the lever **60** and the extended portion **481*a*** of the main shaft **48** and to cause the swing cam **64*a*** to leave a notch of the rotatable cam **56*a***. As the swing cam **64*a*** leaves the notch of the rotatable cam **56*a*** and engage the peripheral cam surface of the cam **56*a***, the swing cam **64*a*** turns in a counterclockwise direction, as seen in the figures, for urging a conductor **44** upwards to complete an electric circuit between a movable contact **40** carried by the conductor **44** and a stationary contact **38** carried by another conductor. FIG. **2A–1** shows the condition in which the two electric contacts are thus brought in touch with each other.

Referring to FIGS. **2B–1** and **2B–2,** the tread member **66*a*** is turned from the position of FIGS. **2A–1,** for the purpose of bringing the linear ridge **661*a*** of the tread member **66*a*** into operative engagement with the stopper **641*a*** of the swing cam **64*a***. As apparent from the figures, the engagement of the linear ridge **661*a*** with the stopper **641*a*** prevents the swing cam **64*a*** from swinging in the clockwise direction.

When the extended portion **481*a*** of the main shaft (not shown) is turned clockwise by the lever **60** in response to the downward movement of the tread member **66*a***, a spiral spring (not shown) is wound up in the same manner as the first embodiment as described hereinbefore by referring to FIGS. **1A** to **1E.** The wound-up spiral spring (not shown) tends to turn the extended shaft portion **481a** in a counterclockwise direction, but the engagement of the lower end of the tread member **66*a*** and the lever **60** prevents such turning of the extended shaft portion **641*a***. If the push button **16*a*** of the type that automatically return to its raised position upon removal of the depression, the aforesaid restriction of the counterclockwise rotation of the extend shaft portion **481*a*** by the engagement between the tread member **66*a*** and the lever **60** is removed upon removal of the depression of the push button **16*a***. As the extended shaft portion **481*a*** turns in the counterclockwise direction, the rotatable cam **56*a*** is also turned counterclockwise by the action of the fixed cam **58.** When the rotatable cam **56*a*** comes to a position where the lower edge of the swing cam **64*a*** to

engage a notch of the cam **56***a*, the swing cam **64***a* tends to turn clockwise for opening the electric circuit between the contacts **38** and **40.** The aforesaid engagement between the linear ride **661***a* and the stopper **641***a*, however, prevents such clockwise rotation of the swing cam **64***a* and keeps the electric circuit between the contacts **38** and **40** as closed. Such condition of the switch is referred to as "continuous turned-on position" in the specification.

Thus, with the second embodiment of the delay switch of the present invention, the tread member **66***a* is turned clockwise after turning on the switch, so as to keep the switch at the continuous turned-on position. It is apparent that, without the clockwise turning of the tread member **66***a*, the switch will be turned off upon return of the tread member **66***a* to its upermost position with a predetermined time delay from the moment of such return.

In the case of the second embodiment of the invention, the switch may be turned off with or without time delay. To turn off without time delay, it is sufficient to simply turn the tread member **66***a* in a counterclockwise direction from a raised position relative to the position as shown in FIGS. **2B–1** and **2B–2.** To turn off with the time delay, the tread member **66***a* is straightly depressed from the raised position to the position as shown in FIGS. **2B–1** and **2B–2,** for winding up the spiral spring, and the tread member **66***a* is turned counterclockwise to the position as shown in FIGS. **2A–1** and **2A–2** and then released to its raised position.

FIGS. **3A** and **3B** illustrate a third embodiment of the time delay switch according to the present invention. The third embodiment is similar to the first embodiment except the configuration of the rotatable cam **56.** Referring to FIG. **1D**, the rotatable cam **56** has only two recessed portions; namely, the groove **561** for receiving the projection **581** and the other notch **563** engageable with the lower edge **642** of the swing cam **64.** On the other hand, the rotatable cam **56***b* of the third embodiment has three recessed portions; namely, a groove **561***b* corresponding to the groove **561** of the first embodiment, a notch **563***b* corresponding to the notch **563** of the first embodiment, and a step-like recessed portion **564***b*. The rotatable cam **56***b* of the third embodiment is useful for those applications where the completion of the circuit through the timer switch should be kept as closed only for a limited angular positions of the main shaft **48,** and as soon as a specific angular range of the shaft **48** is exceeded, the timer switch should be turned off. The step-like recessed portion **563***b* serves for turning off the timer switch when a given angular range of the main shaft **48** is exceeded.

FIGS. **4A** to **4D** illustrate a fourth embodiment of the time delay switch according to the present invention. The differences of the fourth embodiment from the first embodiment as shown in FIGS. **1A** to **1E** are in the shapes and structures of the tumbler switch button, the tread member, the shaft actuating lever, and the rotatable cam. The fourth embodiment uses a tampler switch button **16***c* which a slit **161***c* at one end thereof. An eye hole **661***c* is bored through one end of a tread member **66***c*, and the thus eyed end of the tread member **66***c* is inserted in the slit **161***c* and pivotally connected thereto by a pin **163***c* which penetrates through holes **162***c* across the slit **161***c* of the button **16***c* and the eye hole **661***c* of the tread member **66***c*. The lower end or leg portion of the tread member **66***c* is bifurcated, so as to receive the free end of a lever **60***c* between the two legs at the bifurcated end of the tread member **66***c*. To facilitate the engagement with the bifurcated portion of the tread member **66***c*, the free end of the lever **60***c* may have a small diameter portion. Such small diameter portion may be formed by threadedly connecting a screw **601***c* with a head at the free end of the lever **60***c*, as specifically shown in FIG. **4D**, The configuration of the rotatable cam **56***c* of the fourth embodiment is identical with that of the second embodiment, as described hereinbefore by referring to **2A–1** to **2B–2.** The fourth embodiment uses a swing cam **64***c* which is substantially the same as the swing cam **64** of the first embodiment in the function thereof.

With the fourth embodiment, as shown in FIGS. **4A** to **4D**, the time delay switch can turned on instatantly, but it can be turned off only with a certain time delay. The operation for such instant turn-on and delayed turn-off is substantially the same as that of the first embodiment, as described hereinbefore by referring to FIGS. **1A** to **1E.**

In FIGS. **4A** to **4D**, reference numeral **68** represents a leaf spring having opposite ends supported by a casing. The leaf spring **68** serves to stabilize the tumbler switch button **16***c* at each of the turned-on and turned-off positions. Thus, the leaf spring **68** of the fourth embodiment corresponds to the member **661** of the first embodiment. FIG. **4B** shows a ledge **121***c* formed on the inner wall of a casing **12c** for holding the end portion of the leaf spring **68.**

FIG. **5** shows a fifth embodiment of the time delay switch according to the present invention, which is a simplification of the preceding first to fourth embodiments by eliminating the swing cam **64,** or **64***c*. With the fifth embodiment, one end of a lever **60***d* is secured to an extended portion **481***d* of a main shaft of a clock means **26***d*. A rotatable cam **56***d* is rotatably mounted on the free end of the extended shaft portion **481***d* so as to be actuated by a fixed cam **58***d* secured to the extended shaft portion **48***d*.

Upon depression of a push button **16***d*, a tread member **66***d* pivotally connected to the push button **16***d* acts to swing the lever **60***d* in a clockwise direction, for winding up a spiral spring (not shown) having one end secured to the main shaft (not shown) of the clock means **26***d*. At the same time, the rotatable cam **56***d* is also turned clockwise together with the extended shaft portion **48***d*. The rotatable cam **48***d* has a notch **561***d* formed along the periphery thereof, for operatively receiving a downward projection **441***d* of a conductor **44***d* carrying a movable contact **40.** A fixed contact **38,** which cooperates with the movable contact **40,** is electrically connected to another conductor **42** fixed to a switch casing. When the extended shaft portion **48***d* is rotated by the lever **60***d* or the spiral spring (not shown), if the downward projection **441***d* of the conductor **44** engages the non-notched peripheral surface of the rotatable cam **56d**, the conductor **44** is pushed upward. Accordingly, the movable contact **40** comes in electrically contact with the fixed contact **38.** On the other hand, if the downward projection **441***d* of the conductor **44** engages the notch **561***d* of the rotatable cam **56,** the conductor **44** swings downward, so that the movable contact **40** is separated from the fixed contact **38.** Thus, with the fifth embodiment, the downward

projection 441*d* of the conductor 44 fulfills the function of the swing cum 64 or 64*c* of the preceding embodiments.

FIG. 6 illustrates a schematic circuit diagram which includes a time delay switch according to the present invention. In the figure, K_1, K_2, K_3, . . . represent electric loads located at different floors of a multistoried building, such as illuminating loads for each of the different floors. Selective switches S_1, S_2, S_3, . . . are connected in series with the loads, respectively. Each selective switch has one movable contact and three fixed contacts, including a fixed contact a for a timer circuit, a fixed contact *b* for turn-off, and a fixed contact *c* for continuous turn-on. All the fixed contacts *c* of the selective switches are connected to a time delay switch S, which is contructed according to the principles of the present invention.

In operation of the illuminating circuit of FIG. 6, those loads which are desired to be continuously energized should be connected to the fixed contact *c* of the selective switches. The illuminating loads which are desired to be immediately turned off should be connected to the fixed contacts *b* of the selective switches. The selective switches which are connected to loads to be turned off with a time delay should be turned to the fixed contacts *a* thereof, respectively. Thereafter, upon actuation of the switch button (not shown) of the time delay switch S, the illuminating loads in series with the contacts a of the selective switches will be turned off after a certain delay time which is present on the time delay switch S. The time delay switch S of FIG. 6 can be any one of the first to fifth embodiments which have been described hereinbefore by reverring to FIGS. 1A to 5.

In the foregoing description, it has been assumed that the time delay switch is turned on instantly by the actuation of the switch button, but it is turned off after a certain delay time from the actuation of the switch button for turn-off. It should be understood that the present invention is not restricted to such arrangement. For instance, it is also possible to carry out instant turn-off and delayed turn-on by suitably modifying selected elements of the time delay switch: namely, by reversing the positional relation between the rotatable cam and the swing cam, or by rever in the rotating direction of the rotatable cam in response to the depression of the lever by insertin a suitable gearing means between the lever and the main shaft of the clock means.

Although the present invention has been described with a certain degree of particularity, it is understood that the present disclosure has been made only by way of example and that numerous changes in the details of construction and the combination and arrangement of parts may be resorted to without departing from the spirit and the scope of the present invention as hereinafter claimed.

we claim:

1. A time delay switch device, comprising a switch housing; switch actuating means movable between at least two operative positions and protruding from said housing; clock means comprising a frame member, a main shaft rotatably supported by said frame member, a spiral spring mounted on said main shaft, a spring stopper for connecting one end of said spiral spring to said main shaft, an auxiliary shaft held by said frame member and connected to the other end of said spiral spring for winding and rewinding said spiral spring in response to the turning of said main shaft, a main gear mounted on said main shaft and rotatable in one direction by releasing action of said spiral spring due to said spring stopper, and gearing meshing with said main gear for reducing the turning speed of said main gear due to releasing action of said spiral spring and imparting substantially high frictional resistance to prevent said main gear from turning in the other direction, when said spiral spring is to be wound-up; lever means attached to a portion of said main shaft and actuated by said switch actuating means to rotate said main shaft and wind-up said spiral spring; said portion of said main shaft projecting from said frame member; cam means for comprising a fixed cam secured to the free end of said main shaft, a rotatable cam mounted on the main shaft and having a groove loosely receiving a projection of said fixed cam, and a swing cam pivotally mounted on a stud secured to said frame member and engageable with a notch of said rotatable cam; and electrical conductor means carrying stationary and movable contacts, said movable contact being subject to contact with the stationary contact by the action of said swing cam driven by said rotatable cam connected to said main shaft through said fixed cam.

2. The time delay switch device according to claim 1, wherein said switch actuating means is a tumbler button having projecting portions engageable with an upper portion of said housing, said button actuating said lever through a tread member and having a plate spring to hold said button at one of turned-on and turned-off positions.

3. The time delay switch device according to claim 1, wherein said switch actuating means comprises a spring-biased push button having a tread member to actuate said lever.

4. The time delay switch device according to claim 2, wherein said switch actuating means further comprises a detent which prevents returning of the tread member from a lowered position to a raised position to hold the stationary and movable contacts in contact state.

5. The time delay switch device according to claim 4, wherein said detent comprises a pin rotatable by turning said push button and planted on said tread member, and a bar member mounted on said pin and movable together with said swing cam at a predetermined angle to the latter.

6. The time delay switch device according to claim 4, wherein said detent comprises a linear ridge on said tread member and a rotatably mounted bar member swingable together with said swing cam at a predetermined angle to said swing cam.

* * * * *