Office de la Propriété Intellectuelle du Canada
Un organisme d'Industrie Canada

Canadian Intellectual Property Office
An agency of Industry Canada

CA 2517445 A1 2004/09/23

(21) 2 517 445

(12) DEMANDE DE BREVET CANADIEN
CANADIAN PATENT APPLICATION

(13) A1

(86) Date de dépôt PCT/PCT Filing Date: 2004/03/08
(87) Date publication PCT/PCT Publication Date: 2004/09/23
(85) Entrée phase nationale/National Entry: 2005/08/29
(86) N° demande PCT/PCT Application No.: US 2004/006812
(87) N° publication PCT/PCT Publication No.: 2004/080681
(30) Priorité/Priority: 2003/03/07 (60/452,543) US

(51) Cl.Int.^{7}/Int.Cl.^{7} B29B 13/08

(71) Demandeur/Applicant:
PHILIP MORRIS PRODUCTS S.A., CH

(72) Inventeurs/Inventors:
KARLES, GEORGIOS D., US;
LAYMAN, JOHN M., US;
GEE, DIANE L., US;
MAHER, ROBERT J., US;
SWEENEY, WILLIAM R., US

(74) Agent: RIDOUT & MAYBEE LLP

(54) Titre : APPAREILS ET PROCEDES DESTINES AU TRAITEMENT ELECTROSTATIQUE DE FORMULATIONS POLYMERES

(54) Title: APPARATUSES AND METHODS FOR ELECTROSTATICALLY PROCESSING POLYMER FORMULATIONS

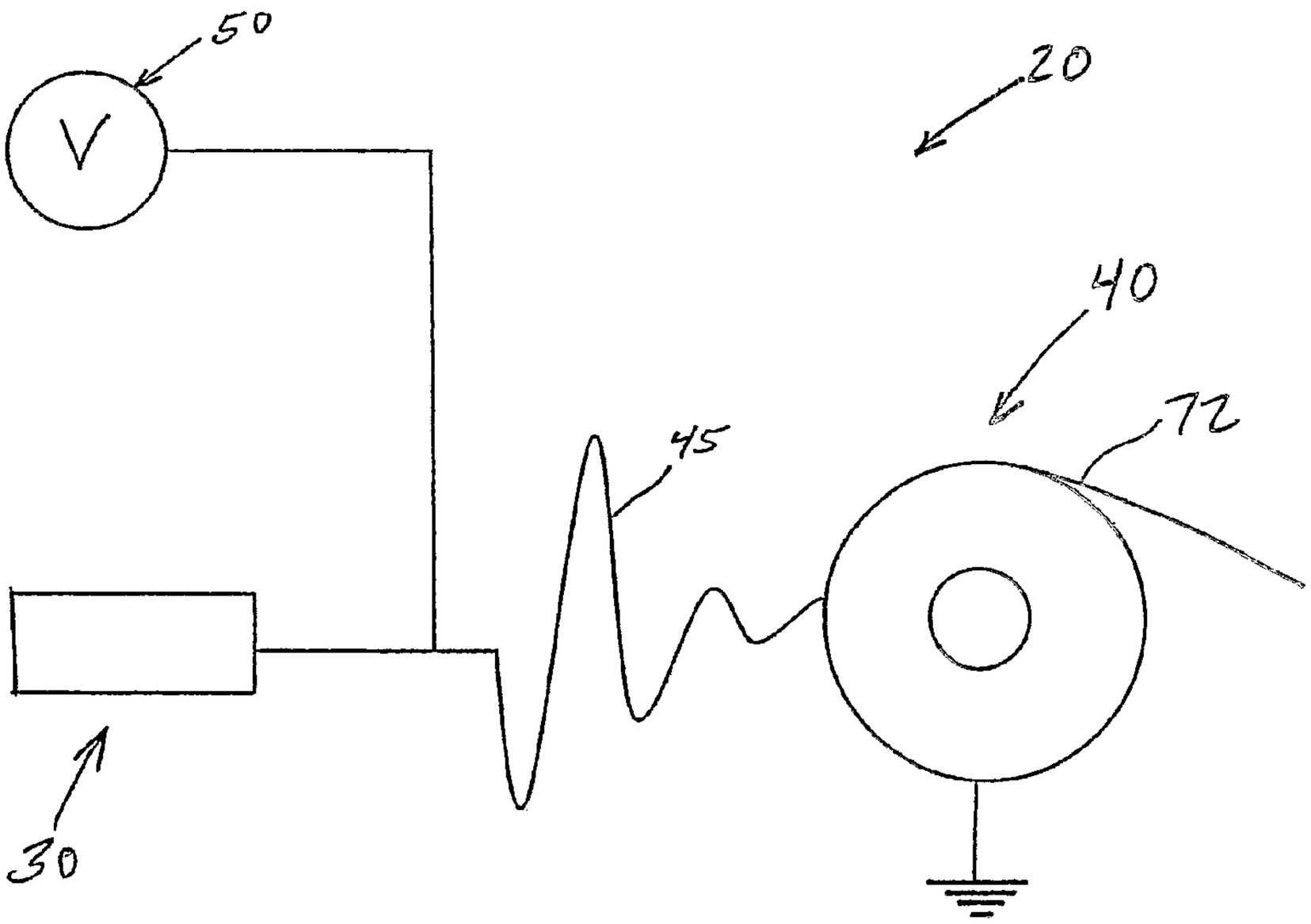

(57) Abrégé/Abstract:
Apparatuses and methods useful for continuously electrostatically processing polymer formulations are provided. The apparatuses include a feeding stage operable to continuously eject electrostatically processed material, and a collection stage at which the ejected material is collected. The apparatuses include a device for continuously removing the deposited electrostatically processed material from the collection stage. The apparatuses can optionally include a pick-up stage operable to wind the removed electrostatically processed material. A treatment stage can be provided to apply substances to the electrostatically processed material to change characteristics of the material, and/or to physically treat the material, such as by rolling or heating. The electrostatically processed materials can have micro-scale or nano-scale dimensions.

(12) INTERNATIONAL APPLICATION PUBLISHED UNDER THE PATENT COOPERATION TREATY (PCT)

(19) World Intellectual Property Organization
International Bureau

(43) International Publication Date
23 September 2004 (23.09.2004)

PCT

(10) International Publication Number
WO 2004/080681 A1

(51) International Patent Classification[7]: B29B 013/08

(21) International Application Number:
PCT/US2004/006812

(22) International Filing Date: 8 March 2004 (08.03.2004)

(25) Filing Language: English

(26) Publication Language: English

(30) Priority Data:
60/452,543 7 March 2003 (07.03.2003) US

(71) Applicant *(for all designated States except US)*: **PHILIP MORRIS PRODUCTS S.A.** [CH/CH]; Quai Jeanrenaud 3, CH-2000 Neuchatel (CH).

(72) Inventors; and

(75) Inventors/Applicants *(for US only)*: **KARLES, Georgios, D.** [US/US]; 11829 Summer Stream Drive, Richmond, VA 13233 (US). **LAYMAN, John, M.** [US/US]; 14113 Spruce Avenue, Chester, VA 23836 (US). **GEE, Diane, L.** [US/US]; 2907 St. Regis Drive, Richmond, VA 23236 (US). **MAHER, Robert, J.** [US/US]; 2919 Glendower Circle, Midlothian, VA 23113 (US). **SWEENEY, William, R.** [US/US]; 8242 Marwood Drive, Richmond, VA 23235 (US).

(74) Agents: **SKIFF, Peter, K.** et al.; Burns, Doane, Swecker & Mathis, LLP, P.O. Box 1404, Alexandria, VA 22313-1404 (US).

(81) Designated States *(unless otherwise indicated, for every kind of national protection available)*: AE, AG, AL, AM, AT, AU, AZ, BA, BB, BG, BR, BW, BY, BZ, CA, CH, CN, CO, CR, CU, CZ, DE, DK, DM, DZ, EC, EE, EG, ES, FI, GB, GD, GE, GH, GM, HR, HU, ID, IL, IN, IS, JP, KE, KG, KP, KR, KZ, LC, LK, LR, LS, LT, LU, LV, MA, MD, MG, MK, MN, MW, MX, MZ, NA, NI, NO, NZ, OM, PG, PH, PL, PT, RO, RU, SC, SD, SE, SG, SK, SL, SY, TJ, TM, TN, TR, TT, TZ, UA, UG, US, UZ, VC, VN, YU, ZA, ZM, ZW.

(84) Designated States *(unless otherwise indicated, for every kind of regional protection available)*: ARIPO (BW, GH, GM, KE, LS, MW, MZ, SD, SL, SZ, TZ, UG, ZM, ZW), Eurasian (AM, AZ, BY, KG, KZ, MD, RU, TJ, TM), European (AT, BE, BG, CH, CY, CZ, DE, DK, EE, ES, FI, FR, GB, GR, HU, IE, IT, LU, MC, NL, PL, PT, RO, SE, SI, SK,

[Continued on next page]

(54) Title: APPARATUSES AND METHODS FOR ELECTROSTATICALLY PROCESSING POLYMER FORMULATIONS

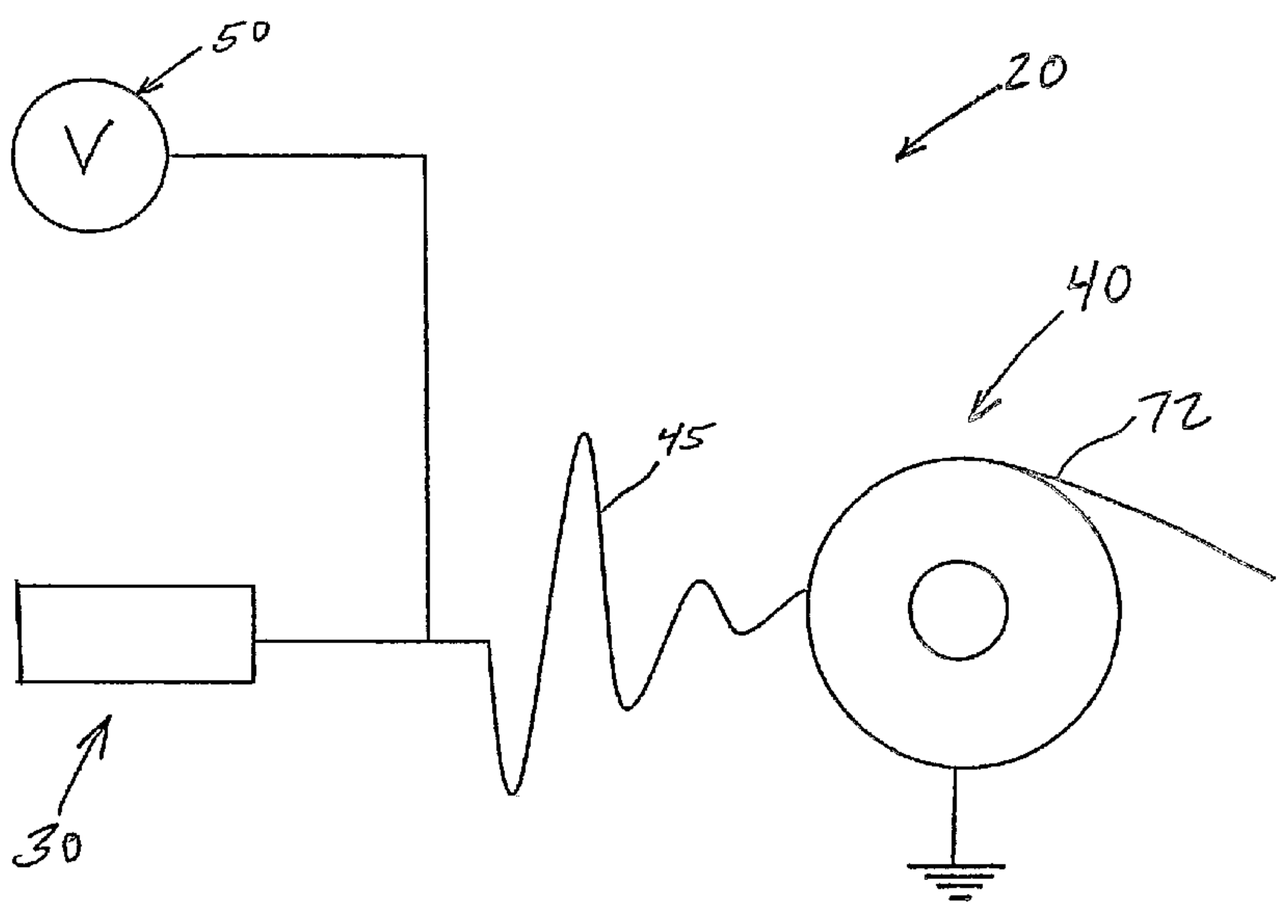

(57) Abstract: Apparatuses and methods useful for continuously electrostatically processing polymer formulations are provided. The apparatuses include a feeding stage operable to continuously eject electrostatically processed material, and a collection stage at which the ejected material is collected. The apparatuses include a device for continuously removing the deposited electrostatically processed material from the collection stage. The apparatuses can optionally include a pick-up stage operable to wind the removed electrostatically processed material. A treatment stage can be provided to apply substances to the electrostatically processed material to change characteristics of the material, and/or to physically treat the material, such as by rolling or heating. The electrostatically processed materials can have micro-scale or nano-scale dimensions.

WO 2004/080681 A1

WO 2004/080681 A1

TR), OAPI (BF, BJ, CF, CG, CI, CM, GA, GN, GQ, GW, ML, MR, NE, SN, TD, TG).

Declarations under Rule 4.17:

— *as to applicant's entitlement to apply for and be granted a patent (Rule 4.17(ii)) for the following designations AE, AG, AL, AM, AT, AU, AZ, BA, BB, BG, BR, BW, BY, BZ, CA, CH, CN, CO, CR, CU, CZ, DE, DK, DM, DZ, EC, EE, EG, ES, FI, GB, GD, GE, GH, GM, HR, HU, ID, IL, IN, IS, JP, KE, KG, KP, KR, KZ, LC, LK, LR, LS, LT, LU, LV, MA, MD, MG, MK, MN, MW, MX, MZ, NA, NI, NO, NZ, OM, PG, PH, PL, PT, RO, RU, SC, SD, SE, SG, SK, SL, SY, TJ, TM, TN, TR, TT, TZ, UA, UG, UZ, VC, VN, YU, ZA, ZM, ZW, ARIPO patent (BW, GH, GM, KE, LS, MW, MZ, SD, SL, SZ, TZ, UG, ZM, ZW), Eurasian patent (AM, AZ, BY, KG, KZ, MD, RU, TJ, TM), European patent (AT, BE, BG, CH, CY, CZ, DE, DK, EE, ES, FI, FR, GB, GR, HU, IE, IT, LU, MC, NL, PL, PT, RO, SE, SI, SK, TR), OAPI patent (BF, BJ, CF, CG, CI, CM, GA, GN, GQ, GW, ML, MR, NE, SN, TD, TG)*

— *as to the applicant's entitlement to claim the priority of the earlier application (Rule 4.17(iii)) for all designations*

Published:

— *with international search report*

— *before the expiration of the time limit for amending the claims and to be republished in the event of receipt of amendments*

For two-letter codes and other abbreviations, refer to the "Guidance Notes on Codes and Abbreviations" appearing at the beginning of each regular issue of the PCT Gazette.

APPARATUSES AND METHODS FOR ELECTROSTATICALLY PROCESSING POLYMER FORMULATIONS

Background

Electrostatic processing techniques use electrostatic force to draw a charged polymer formulation from a source to a collector. The electrostatic field acts to accelerate the liquid from the source to the collector, on which the electrostatically processed material is collected.

Summary

Apparatuses and methods for electrostatically processing polymer formulations are provided. The apparatuses and methods can provide continuous production of electrostatically processed materials.

A preferred embodiment of an apparatus for electrostatically processing a polymer formulation comprises a feeding stage operable to continuously eject electrostatically processed material comprising a polymer formulation; a collection stage spaced from the feeding stage; a power supply operable to generate an electric field, which causes the electrostatically processed material ejected from the feeding stage to deposit on the collection stage; and a pick-up stage including a removing device disposed to continuously remove the electrostatically processed material from the collection stage.

Polymer formulations that can be electrostatically processed using preferred embodiments of the apparatuses and methods include polymer solutions, dispersions, suspensions, emulsions, mixtures thereof, and polymer melts. The electrostatically processed material can have various forms, including fibers, droplets, beads, films, dry porous films, webs, mats

and/or combinations thereof. The electrostatically processed material preferably has at least one micro-scale or nano-scale dimension.

Another preferred embodiment of the apparatus comprises a treatment stage, which is operable to treat the electrostatically processed material at the collection stage and/or after being removed from the collection stage. For example, the material can be heated, cured, rolled, cut, stretched, and/or treated to change its surface chemical structure. The treatment stage can also be operated to apply one or more substances to the electrostatically processed material.

Another preferred embodiment of the apparatus comprises at least one thickness sensor and/or slack sensor for detecting the thickness of, and/or the amount of slack in, the electrostatically processed material. The apparatus can include a controller, which is operable to receive signals from the sensor(s) and adjust the collection stage and/or pick-up stage, as appropriate, to maintain a desired thickness and/or amount of slack.

A preferred embodiment of a method for electrostatically processing a polymer formulation comprises generating an electric field; supplying a polymer formulation to a feeding stage; continuously ejecting electrostatically processed material from the feeding stage through the electric field; collecting the electrostatically processed material at a collection stage; and continuously removing the electrostatically processed material from the collection stage.

Brief Description of the Drawings

Figure 1 illustrates a preferred embodiment of an apparatus for electrostatic processing.

Figure 2 illustrates a preferred embodiment of a feeding device of the apparatus, which includes multiple nozzles.

Figure 3 illustrates another preferred embodiment of the feeding device, which includes dual flow passages and multiple nozzles.

Figure 4 illustrates a preferred embodiment of the feeding device including a brush.

Figure 5 illustrates another preferred embodiment of the feeding device including a brush construction.

Figure 6 illustrates another preferred embodiment of the feeding device, which includes nozzles and nozzle cleaning structure.

Figure 7 illustrates a preferred embodiment of the apparatus including a collection stage, a post-collection stage and sensors for monitoring the electrostatically processed material.

Figure 8 illustrates a preferred embodiment of the apparatus, which includes a post-collection treatment stage.

Figure 9 illustrates another preferred embodiment of the apparatus including a rolling stand.

Figure 10 illustrates another preferred embodiment of the apparatus including a release sheet application roll.

Figure 11 illustrates a preferred embodiment of the apparatus including the feeding device shown in Figure 5.

Figure 12 illustrates a preferred embodiment of the apparatus including the feeding device shown in Figure 6.

Figure 13 illustrates another preferred embodiment of the apparatus including a target, which rotates in a liquid.

Figure 14 illustrates another preferred embodiment of the apparatus including a funnel-shaped target.

Detailed Description

Preferred embodiments of apparatuses and methods for electrostatically processing polymer formulations can provide continuous production of electrostatically processed materials. The electrostatically

processed materials can be in various forms, including, but not limited to, fibers, droplets, beads, films, dry porous films, webs, mats and/or combinations thereof.

The electrostatically processed materials can be micro-scale or nano-scale materials. As used herein, the terms "micro-scale" and "nano-scale" denote materials that have at least one micro-scale dimension, or at least one nano-scale dimension, respectively. The dimension can be, for example, a diameter, maximum transverse dimension, length, width and/or height. The electrostatically processed materials also can have compositions, structures and properties that can be varied by the selection of starting materials and/or processing conditions.

As used herein, the term "electrostatic processing" denotes electrostatic spinning (electrospinning) and electrostatic spraying (electrospraying) techniques. Electrospinning produces fibers, and electrospraying produces droplets or clusters of droplets. Such fibers continuously collect on the collection stage, while the droplets or droplet clusters collect in individual droplets on the collection stage.

An electrostatically processed material can be formed by electrospinning or electrospraying a polymer formulation by manipulating components of the polymer system and/or changing various process parameters, such as applied voltage, distance from the feeding stage to the collection stage, volumetric flow rate, and the like. In addition, whether a polymer formulation electrospins or electrosprays can be controlled by changing physical characteristics of the polymer formulation, such as changes in concentration, solvent selection, polymer molecular weight, polymer branching, and the like.

A preferred embodiment of an apparatus 20 for electrostatically processing polymer formulations is depicted in Figure 1. The apparatus 20 comprises a feeding stage 30 and a collection stage 40. The apparatus 20

preferably also includes a pick-up stage, as described below. The apparatus 20 can optionally also include a post-collection treatment stage, as also described below.

The feeding stage 30 is operable to continuously eject a polymer formulation 45, which is electrostatically processed. As described below, the feeding stage 30 can comprise one feeding device, or alternatively multiple feeding devices. The electrostatically processed material 72 is deposited on, and preferably continuously removed from, the collection stage 40. The polymer formulation can be a polymer solution, dispersion, suspension, emulsion, mixtures thereof, or a polymer melt. The polymer formulation can comprise one-phase or two-phase systems. Exemplary polymer formulations include, but are not limited to, cellulose acetate, poly(ethylene-co-vinylacetate), poly(lactic acid), and blends thereof, poly(acrylonitrile), polyaniline-sulfonated styrene, polyaniline, polyester, poly(ethyleneterephthalate), poly(propylene), poly(ethylene) and blends thereof. Exemplary suitable solvents for the polymer formulation include, but are not limited to, water for aqueous solvent-based polymer formulations, and organic solvents, such as acetone and alcohols, for organic solvent-based polymer formulations.

Polymer melts can be prepared by techniques known to those skilled in the art and electrostatically processed. Preparation techniques may include premixing and melting the components of the polymer, such as by melt mixing in a heated extrusion apparatus. Electrostatic processing techniques are described, for example, in Larrondo, L. and S. John Manley, J "Electrostatic Fiber Spinning from Polymer Melts, I. Experimental Observations on Fiber Formation and Properties," Journal of Polymer Science, Polymer Physics Ed., vol. 19, (1981) 909-920, the contents of which are incorporated herein by reference in their entirety.

In the embodiment, the feeding stage 30 is electrically connected to a power supply 50, which applies a voltage to the feeding stage. The power supply 50 can be either DC or an AC power supply. In the embodiment, the collection stage 40 is at ground potential. By applying a sufficiently high voltage to the feeding stage 30, with the collection stage 40 at ground potential, an electric field can be generated in the space between the feeding stage and collection stage. The feeding stage 30 and collection stage 40 are sufficiently close together to produce an electric field strength that is sufficient to initiate the electrostatic processing of the polymer formulation. The feeding stage 30 is operable to introduce the polymer formulation 45 into the electric field. The electric field produces an electrostatic force, which draws the polymer formulation through the space from the feeding stage 30 to the collection stage 40, where the polymer formulation deposits to form fibers, droplets, and/or structures comprising fibers and/or droplets, especially when a transition from electrospraying to electrospinning occurs during processing of a polymer formulation. Depending on the polymer formulation, the electrospraying to electrospinning transition may occur or not occur as the concentration of the polymer in the polymer formulation is increased.

A preferred embodiment of the feeding stage 30 is depicted in Figure 2. The feeding stage 30 comprises a feeding device 130 including a flow passage 132 in fluid communication with a manifold 134. The manifold 134 can include a single nozzle, or preferably a plurality of nozzles 136, as shown. The nozzles 136 can be arranged parallel to each other as depicted, or alternatively can have other desired orientations. The nozzles 136 can be positioned in a horizontal plane as depicted, or alternatively can be positioned at different angles relative to the horizontal to change the direction of impingement of the electrostatically processed material on the collection stage 40.

The number of nozzles 136 in the manifold 134 can be chosen based on different factors, such as the desired throughput of fibers from the feeding device 130, or the size of the collection surface(s) of the collection stage on which the polymer is deposited. The number of nozzles 136 in the manifold 134 and/or the number of manifolds 134 including nozzles 136 can be increased in the apparatus to increase throughput of electrostatically processed material.

In addition, the size of the nozzle 136 openings of the manifold 134 can be the same as each other, or two or more nozzles can have different sized openings. The nozzles 136 can have a suitable nozzle opening size and length to produce a jet or spray of the polymer formulation with desired characteristics.

The polymer formulation is supplied to the flow passage 132 of the feeding device 130 from a source 138 in fluid communication with the flow passage 132. The source 138 preferably has a sufficiently large capacity of the polymer formulation to allow for the continuous production of a desired amount of electrostatically processed material by operation of the apparatus.

The feeding stage 30 preferably comprises at least one pump 137 between the source 138 and flow passage 132. The pump 137 is operable to supply the polymer formulation to the manifold 134, preferably at a controlled rate, to thereby control the ejection rate of the polymer formulation from the nozzle(s) 136. The pump 137 can be used to supply a single manifold, or alternatively two or more manifolds.

In another preferred embodiment, the polymer formulation can be fed through the one or more nozzles 136 of the manifold 134 using various alternative feeding techniques including, for example, gravity, compressed air, piston motion, or the like.

Figure 3 depicts a feeding device 230 according to another preferred embodiment. The feeding device 230 includes a first flow path 233 in fluid

communication with a first source 238 of a polymer formulation, a solvent, at least one optional active component, or a mixture of a solvent and at least one optional active component, and a second flow path 235 in fluid communication with a second source 239 of a polymer formulation, a solvent, at least one optional active component, or a mixture of a solvent and at least one optional active component. The first and second polymer formulations can be the same or different formulations. The active component can be, for example, at least one cross-linking agent, photoinitiator, thermal initiator, or the like.

The first flow path 233 and second flow path 235 are in fluid communication with the flow passage 232. The feeding device 230 is operable to produce electrostatically processed materials from a single polymer formulation or from two-component polymer formulations. Particularly, the same or different polymer formulation can be introduced via the first flow path 233 and second flow path 235 into the flow passage 232, where the polymer formulations are combined together to form a mixed polymer formulation, which is ejected from the nozzles 236. Alternatively, a polymer formulation can be supplied from the first source 238 or second source 239, and a solvent or active component supplied from the other of the first source 238 or second source 239, to change the polymer formulation composition to affect the composition and/or processing characteristics of the polymer formulation.

In the embodiment, the feeding device 230 preferably comprises a first pump 237 and a first valve 241 between the first source 238 and the flow passage 232, and a second pump 240 and a second valve 243 between the second source 239 and the flow passage 232, to supply the contents of the first source 238 and second source 239 to the manifold 234, preferably at controlled flow rates, to thereby control the ejection rate of the polymer formulation from the one or more nozzles 236 of the feeding device 230.

The solvent alone can be flowed to the manifold 234 from the first source 238 or second source 239 to clean the nozzles, as desired.

In a preferred embodiment, an in-line mixer 244 can be provided along the flow passage 232 to promote mixing of the polymer formulation prior to being ejected from the nozzles 236.

Figure 4 depicts a feeding device 330 according to another preferred embodiment. The feeding device 330 includes an open container 332, which contains a polymer formulation, and a brush 340. The feeding device 330 also includes a polymer formulation supply system 344, such as shown in Figure 3, to replenish the polymer formulation in the container 332 as it is consumed during electrostatic processing.

The brush 340 includes a plurality of bristles 342 made of an electrically conductive material, such as a metal or metal alloy. The brush 340 can be connected to a suitable drive source 345, such as a variable speed motor, which is operable to rotate the brush 340 at a desired speed as indicated by arrow A. A power supply 346 can be electrically connected to the brush 340, such as to the axis 347. The power supply 346 can be either a DC or an AC power supply. During rotation of the brush 340, the bristles 342 contact, and are wetted by, the polymer formulation in the container 332, ejecting the polymer formulation 45 into the electric field.

Figure 5 illustrates a feeding device 430 according to another preferred embodiment. The feeding device 430 includes an alternative brush 440, and a container 432 containing the polymer formulation 45. The brush 440 includes a body 442 and bristle-like extensions 444 extending outward from the body 442. The brush 440 is made of an electrically conductive metal or metal alloy. During rotation of the brush 440 as represented by arrow B, the extensions 444 contact, and are wetted by, the polymer formulation 45 in the container 432, causing the polymer formulation 45 to be ejected into the electric field and drawn toward the collection stage.

A feeding device 530 according to another preferred embodiment is depicted in Figure 6. The feeding device 530 includes a polymer formulation flow passage 560, a cleaning liquid flow passage 570, and a plurality of nozzles 581-588 extending outwardly from the surface 552. The number of nozzles of the feeding device 530 can be varied to produce a desired ejection pattern and throughput of the polymer formulation. A polymer formulation is supplied to the polymer formulation flow passage 560 from a source of the polymer formulation. A cleaning liquid is supplied to the cleaning liquid flow passage 570 from a source of the cleaning liquid.

The feeding device 530 is rotatable as represented by arrow C, such that the nozzles 581-588 in succession come into fluid communication with the polymer formulation flow passage 560 containing the polymer formulation. As shown, when the feeding device 530 is at a particular angular orientation, a nozzle, such as nozzle 581, is in fluid communication with the polymer formulation flow passage 560, such that the polymer formulation can be ejected from this nozzle.

The feeding device 530 includes a stationary mask 590 having an opening 591. The mask 590 is provided to cover the inlet end of the nozzles 581-588 as they rotate over the mask 590. In the illustrated position of the feeding device 530, the mask 590 covers the inlets of the nozzles 582-588, preventing the flow of the cleaning liquid into these nozzles. The opening 591 supplies cleaning liquid to a nozzle as it rotates over the location of the opening 591. The cleaning liquid can flow into nozzle 585 in communication with the opening 591 in the mask 590 in the illustrated position of the feeding device 530. Thus, cleaning liquid can be sequentially supplied to the nozzles 581-588 as they rotate in this order over the mask 590.

The cleaning liquid can be any suitable liquid that is effective to remove polymer material that may deposit in the flow passages of the nozzles 581-588 during operation of the feeding device 530. For example,

the cleaning liquid can be water for water-based polymer formulations, or acetones, alcohols, or other organic solvents for solvent-based polymer formulations. The cleaning liquid is preferably flowed through the nozzles 581-588 at a high pressure to enhance removal of deposited polymer material from the flow passages of the nozzles. Accordingly, the nozzles 581-588 can be cleaned during operation of the feeding device 530 to achieve more consistent and uniform ejection of the polymer formulation from the nozzles.

The feeding stage 30 can include one or more feeding devices, such as the feeding devices 130, 230, 330, 430 and 530 described above, to enable the production of electrostatically processed material structures, such as mats or webs, composed of different polymeric materials, or to produce structures having different compositional and/or density characteristics. The relative spatial locations of the different feeding devices of the feeding stage 30 can be chosen relative to each other and to the collection stage 40 to produce fibrous structures having different densities, morphologies, or other characteristics.

The electric field can be generated between the feeding stage 30 and collection stage 40 according to various preferred arrangements. For example, the polymer formulation feeding device can include an electrically conductive portion electrically connected to a pole of a power supply. The electrically conductive portion can be, for example, the manifolds 134 (Figure 2) and 234 (Figure 3) of the feeding devices 130 and 230, respectively, or the brushes 340 (Figure 4) and 440 (Figure 5) of the feeding devices 330 and 430, respectively. Alternatively, the polymer formulation can be charged by placing an electrode in the polymer formulation flow passage 560 of the feeding device 530.

However, it will be understood by those skilled in the art that the collection stage 40 can alternatively be charged, with the feeding stage 30

being grounded, in order to generate the electric field between the feeding stage and the collection stage.

A preferred embodiment of the apparatus 100 is shown in Figure 7. The apparatus 100 includes a feeding device, such as the feeding device 230 described above, a collection stage 40, and a post-collection stage 60 downstream from the collection stage 40. As shown, the polymer formulation 45 is ejected from the feeding device 230 onto a target 70 of the collection stage 40, electrostatically processed material 72 is formed on the outer surface 74 of the target 70, and the electrostatically processed material is collected at the pick-up stage 60.

The target 70 includes a body 76, which can have various shapes and sizes. As depicted, the body 76 can be cylindrical roll having a cylindrical outer surface 74. Alternatively, the outer surface 74 of the body 76 can have other shapes, such as oval or the like. The outer surface 74 can include one or more flat portions and/or contoured portions (e.g., including protuberances, as well as depressions, grooves, channels, or the like). The shape and/or surface configuration of the outer surface 74 can be selected based on factors, such as the desired shape of the deposited polymer material.

The body 76 of the target 70 can be solid, or alternatively can be hollow to reduce the weight of the target 70. The body 76 can comprise a suitable electrically conductive material, such as aluminum, aluminum alloys, or like metals. The target 70 can be made entirely of the electrically conductive material, or alternatively can include an outer portion, such as an electrically conductive coating, formed over the body 76 and including the outer surface 74.

Another preferred embodiment of the target 70 can be made of a non-conductive material. In such embodiment, the target 70 is positioned sufficiently close to a member made of a conductive material and connected

to a pole of a power supply, which can be either a DC or an AC power supply, or alternatively grounded with voltage applied to the feeding stage, in order to generate the electric field. The polymer formulation is ejected from the feeding stage 30, drawn toward the conductive member and deposited on the target 70.

The apparatus 100 can include one feeding stage and one target 70, or alternatively can include one or more feeding stages and two or more targets. By incorporating more than one target, the apparatus 100 can produce different electrostatically processed material structures, having the same or different polymeric compositions and/or structures, on the different targets. The different structures can be produced in any desired order on the different targets, such as simultaneously or sequentially.

The target 70 is preferably selectively rotatable (as represented by arrow D), and/or translatable in x, y and/or z directions, to change the location of the target at which the polymer formulation impacts during operation of the apparatus 100. To provide rotation capabilities, the target 70 can be mounted on a shaft 78, which is operatively connected to a motor 80 (preferably a variable speed motor) operative to rotate the target 70 in one direction, or in oscillating rotation, during set-up and/or operation of the apparatus 100 to control the formation of electrostatically processed material on the target. For example, the target 70 is preferably selectively rotatable by complete and/or partial reverse rotations.

To provide translation capabilities, the target 70 can be mounted on a translatable target support, which can be translated in x, y and/or z directions.

The target 70 preferably is rotatable and/or translatable at different speeds during electrostatic processing to control the thickness of the electrostatically processed material deposited on the target.

The pick-up stage 60 of the apparatus 100 is operative to remove the electrostatically processed material 72 from the target 70. The pick-up stage 60 preferably is operative to continuously remove the electrostatically processed material 72 from the target 70, to enable continuous production by operation of the apparatus 100. The pick-up stage 60 preferably also collects the removed electrostatically processed material 72. The collected electrostatically processed material 72 can be subjected to one or more post-processing treatments to alter its structure and/or properties.

The pick-up stage 60 includes a suitable device for removing the electrostatically processed material 72 from the target. For example, the pick-up stage 60 can include one or more doctor blades 62 positioned relative to the target 70 to operatively interact with the target 70 to remove the electrostatically processed material 72 from the target surface 74. Alternatively, the pick-up stage can include mechanical, vacuum, or gas assist devices to transfer the removed electrostatically processed material 72 from the target 70 to a desired location.

The pick-up stage 60 can comprise one roll, such as roll 64, or alternatively two or more rolls. The roll 64 is rotated as represented by arrow E to wind the electrostatically processed material 72 removed from the target 70 onto the roll. The roll 64 is preferably operatively connected to a motor 68 operative to rotate the roll 64 during operation of the apparatus 100 to control coiling of electrostatically processed material 72 onto the roll. In addition, the roll 64 is preferably rotatable at different speeds depending on the rotation rate of the target 70.

In preferred embodiments of the pick-up stage 60 that include multiple rolls, the rolls can be vertically stacked, for example, to provide for uninterrupted changeover during processing.

The roll 64 preferably is also translatable to follow translational movements of the target 70. For example, the target 70 and roll can be mounted on a common translatable support.

The rate of pick-up of the removed electrostatically processed material 72 on the roll 64 can be the same or different from the rate at which the electrostatically processed material 72 is deposited on the target 70. In preferred embodiments of the pick-up stage 60 that include multiple rolls, the rolls preferably can be operated at different speeds from each other to process the removed electrostatically processed material 72 to change its characteristics, such as its density and/or morphology.

The apparatus 100 preferably includes at least one thickness sensor 110 positioned to detect the thickness of the electrostatically processed material 72 on the target 70. The thickness sensor 110 can be, for example, a reflective laser sensor, which emits light onto the material. Such thickness sensor 110 determines the thickness of the electrostatically processed material 72 on the target 70 based on the amount of time required for the light 112 to impinge on the electrostatically processed material 72 and reflect back to the thickness sensor 110. Other types of sensors, such as light sensors or the like, can alternatively be used in the apparatus 100 to determine the thickness of the electrostatically processed material 72 on the target 70.

The apparatus 100 preferably also includes a controller 115, which is operable to receive signals from the thickness sensor 110 and determine the electrostatically processed material 72 thickness. If the controller determines that the electrostatically processed material 72 thickness is either above or below a desired thickness, the controller 115 can send a signal to the motor 80, causing adjustment of the rotational and/or translational speed of the target 70, so as to increase or decrease the residence time of the deposition surface(s) of the target 70 in the deposition zone. Accordingly,

the apparatus 100 can control the thickness of the deposited electrostatically processed material 72 on the target 70. The rotational and/or translational speed of the target 70 can thus be adjusted to control the rate of production of electrostatically processed material by the apparatus.

The apparatus 100 preferably also includes at least one slack sensor 120 positioned to detect the amount of slack in the electrostatically processed material 72 at one or more selected locations between the target 70 and the roll 64. The slack sensor 120 can also be a reflective laser sensor, such as described above, which determines the amount of slack of the electrostatically processed material based on the amount of time required for the light 122 to impinge on the electrostatically processed material 72 and reflect back to the slack sensor 120.

The slack sensor 120 is also electrically connected to the controller 115. The slack sensor 10 sends signals to the controller 115, which then determines the amount of slack in the electrostatically processed material 72. If the amount of slack differs from a desired value, the controller 115 sends a signal to the motor 68, causing adjustment of the rotational and/or translational speed of the roll 64, depending on the rotational and/or translational speed of the target 70, in order to maintain a desired level of slack in the electrostatically processed material 72.

The electrostatically processed material 72 removed from the target 70 can be transferred to the pick-up stage 60 either through the air, or alternatively through another fluid medium. For example, the removed electrostatically processed material can be transferred through one or more liquids to treat the polymer material. For example, the liquid can be an adhesive formulation (e.g., PVA glue, polyacrylate glue, or the like), or a solvent effective to form interfiber bonds in the electrostatically processed material 72.

As shown in Figure 8, an apparatus 200 according to another preferred embodiment includes a post-collection treatment stage 125 located between the collection stage 40 and the pick-up stage 60. The treatment stage 125 is operable to impart desired physical, chemical and/or electrical properties to the polymer material. For example, the electrostatically processed material can be heated, cured, or subjected to corona treatment.

For example, the treatment stage 125 can include a radiation emitting device operable to heat the material to a desired temperature. The radiation emitting device can be, for example, a heater, such as a conventional heater or an infrared heater, or a furnace. The heater can heat the material to a suitably high temperature to, for example, dry or cure the electrostatically processed material 72. Drying can be performed if the electrostatically processed material 72 has already been transferred through a liquid, as described above. The treatment stage 125 can include an ultraviolet (UV) light or electron beam source, which can be used to cure some polymer formulations. If it is desired to effect changes to the chemical structure of the electrostatically processed material, the treatment stage 125 can include a corona treatment device operable to subject the electrostatically processed material to a corona treatment to create surface functional groups.

The treatment stage 125 can also, or alternatively, be operable to deposit one or more desired substances on the electrostatically processed material. For example, the treatment stage 125 can include a source of one or more dopants and/or catalysts, which can be applied to the electrostatically processed material. Alternatively, the treatment stage 125 can include a source of one or more drugs or active ingredients, which can be applied to the material.

Alternatively, the treatment stage can apply one or more coating layers on the removed polymer material. For example, a coating having

desired chemical and/or physical properties can be deposited on the removed electrostatically processed material.

The one or more substances, or coatings, can be applied to the electrostatically processed material at the treatment stage 125 by a suitable application process, such as spraying, dipping, rolling, brushing, deposition processes, or the like, using a suitable applicator device.

Figure 9 depicts an apparatus 300 according to another preferred embodiment. The apparatus 300 includes a rolling stand including rolls 65, through which the electrostatically processed material 72 is transferred. The rolls 64 can reduce the thickness of the electrostatically processed material 72 to a desired thickness. In addition, by varying the rotation rates of the roll 64 and rolls 65, the electrostatically processed material can be stretched to impart directional stress in the material.

Figure 10 depicts an apparatus 400 according to another preferred embodiment. The apparatus 400 includes an applicator, such as a roll 67 of a release sheet 69, which applies the release sheet to the electrostatically processed material 72 at the collection stage to prevent blocking and allow easier separation of the coiled material.

According to another preferred embodiment, the electrostatically processed material 72 can be cut after it is removed from the target 70. For example, a cutting stage can be disposed to cut the removed electrostatically processed material 72 into mats of a desired length as an alternative to coiling a continuous length of the electrostatically processed material 72 onto the roll 64.

Figure 11 illustrates an apparatus 500 according to another preferred embodiment. The apparatus 500 includes the feeding device 430 shown in Figure 5. As shown, the apparatus 500 can include a treatment stage 225 disposed to treat the electrostatically processed material 72 while on the target 70. For example, one or more substances can be applied to the

electrostatically processed material 72 at the target 70, as opposed to, or in addition to, at the treatment stage 125, as described above.

Figure 12 illustrates an apparatus 600 according to another preferred embodiment, which includes the feeding device 530 shown in Figure 6.

Figure 13 illustrates an apparatus 700 according to other preferred embodiment. The apparatus 700 includes a feeding stage 30 and a collection stage 40. The feeding stage 30 can include a multiple-nozzle feeding device, such as depicted. However, the feeding stage 30 alternatively can include, for example, the feeding device 330, 430 or 530, as described above.

The collection stage 40 includes a target 70, and a container 90 of a liquid 92. As the target 70 is rotated, a portion of the target 70 comes into contact with and is wetted by, the liquid 92. A source 91 of the liquid 92 is in fluid communication with the container 90 to replenish the liquid consumed during processing.

In an alternative preferred embodiment, the apparatus 700 can include a cascade liquid source to apply the liquid to electrostatically processed material deposited on the target 70.

As the target 70 is rotated, electrostatically processed material on the target comes into contact with the liquid. The liquid 92 preferably has a composition effective to impart desired properties, characteristics and/or morphologies to the electrostatically processed material, or to promote bonding of the electrostatically processed material, such as inter-fiber bonding. For example, the liquid 92 can be a phase separation-producing solution that causes phase separation of the electrostatically processed material, resulting in different fiber morphologies, or liquid absorption. The liquid 92 can alternatively be an active agent that is adsorbed within the electrostatically processed material, such as a cross-linking agent, catalyst, or the like. As another example, the liquid 92 can be a binder effective to

produce bonded structures, such as webs or mats, from electrostatically processed material deposited on the target 70.

Figure 14 illustrates an apparatus 800 according to another preferred embodiment. The apparatus 800 includes a feeding stage 30 and a collection stage 40. The feeding stage 30 can include a multi-orifice feeding device, such as depicted. Alternatively, the feeding stage 30 can include, for example, a feeding device 330, 430 or 530, as described above.

The collection stage 40 includes a funnel-shaped target 95, which may be stationary or movable. The target 95 includes a conical portion 96 and a passage 97 extending through the target. As depicted, the polymer formulation 45 is ejected from the feeding device 30 and electrostatically processed material 72 is collected on the inner surface of the conical portion 96 of the target 95. The collected electrostatically processed material 72 can be removed from the conical portion 96 using a suitable gas emitting device 98, such as a gas gun or the like. A vacuum is created in the passage 97 by the vacuum system to draw the fibers as a continuous thread 99 through the passage. The thread 99 may be collected on a spool, or the like.

The above are exemplary modes of carrying out the invention and are not intended to be limiting. It will be apparent to those of ordinary skill in the art that modifications thereto can be made without departure from the spirit and scope of the invention as set forth in the accompanying claims.

Claims:

1. An apparatus for electrostatically processing a polymer formulation, comprising:

a feeding stage operable to continuously eject electrostatically processed material comprising a polymer formulation;

a collection stage spaced from the feeding stage;

a power supply operable to generate an electric field, the electric field causing the electrostatically processed material ejected from the feeding stage to deposit on the collection stage; and

a pick-up stage including a removing device disposed to continuously remove the electrostatically processed material from the collection stage.

2. The apparatus of Claim 1, wherein the feeding stage comprises a source of the polymer formulation, the polymer formulation being selected from the group consisting of a polymer solution, dispersion, suspension, emulsion, mixtures thereof, and a polymer melt.

3. The apparatus of Claim 1, wherein the apparatus is operable to continuously process electrostatically processed material comprising fibers, droplets, beads, films, dry porous films, webs, mats and/or combinations thereof.

4. The apparatus of Claim 1, wherein the apparatus is operable to continuously process electrostatically processed material having at least one micro-scale or nano-scale dimension.

5. The apparatus of Claim 1, wherein the feeding stage comprises:

a manifold including at least one nozzle through which the polymer formulation is ejected; and

a source of a polymer formulation in fluid communication with the manifold.

6. The apparatus of Claim 1, wherein the feeding stage comprises:

a manifold including at least one nozzle through which the polymer formulation is ejected;

a first source of a first substance selected from the group consisting of a first polymer formulation, a first solvent, at least one optional first active component, and a mixture of the first solvent and the at least one optional first active component, the first source being in fluid communication with the manifold via a first flow path;

a first valve arranged along the first path, the first valve being operable to control flow of the first substance from the first source to the manifold;

a first pump arranged along the first flow path to pump the first substance from the first source to the manifold;

a second source of a second substance selected from the group consisting of a second polymer formulation, a second solvent, at least one optional second active component, and a mixture of the second solvent and the at least one optional second active component, the second source being in fluid communication with the manifold via a second flow path;

a second valve arranged along the second flow path, the second valve being operable to control flow of the second substance from the second source to the manifold; and

a second pump arranged along the second flow path to pump the second substance from the second source to the manifold.

7. The apparatus of Claim 6, further comprising a mixer disposed to mix the first substance supplied to the first flow path and the second substance supplied to the second flow path upstream from the manifold.

8. The apparatus of Claim 1, wherein the feeding device comprises:

a brush;

a container containing the polymer formulation; and

a source of the polymer formulation in fluid communication with the container;

wherein the brush is rotatable relative to the container to contact, and be wetted by, the polymer formulation, thereby ejecting the polymer formulation from the container.

9. The apparatus of Claim 8, wherein the brush comprises bristles of an electrically conductive material, and the power supply is electrically connected to the brush.

10. The apparatus of Claim 1, wherein the feeding device comprises:

a polymer formulation flow passage through which the polymer formulation is flowed;

a cleaning liquid flow passage through which a cleaning liquid is flowed;

a nozzle including an inlet; and

a stationary mask including an opening;

wherein the nozzle is rotatable relative to the mask and the polymer formulation flow passage to position the inlet of the nozzle (i) in fluid communication with the polymer formulation flow passage, and (ii) subsequently in fluid communication with the cleaning liquid flow passage.

11. The apparatus of Claim 1, wherein the collection stage comprises:

at least one target on which the electrostatically processed material is deposited; and

a first mechanism operatively connected to the at least one target for rotating and/or translating the at least one target relative to the feeding stage, the first mechanism optionally comprising a first variable speed motor for rotating the at least one target.

12. The apparatus of Claim 11, wherein the at least one target comprises at least one cylindrical roll.

13. The apparatus of Claim 11, wherein the at least one target comprises (i) an electrically conductive outer portion having an outer surface on which the electrostatically processed material is deposited, or (ii) an

electrically conductive body having an outer surface on which the electrostatically processed material is deposited.

14. The apparatus of Claim 1, wherein the collection stage comprises:

a funnel-shaped target including a conical portion having an inner surface on which the ejected electrostatically processed material deposits, and a flow passage extending through the target;

a gas emitting source arranged to emit gas so as to remove the electrostatically processed material from the inner surface of conical portion; and

a vacuum system arranged to draw the removed electrostatically processed material through the flow passage as a thread.

15. The apparatus of Claim 1, wherein the collection stage comprises:

a target having an outer surface;

a container;

a source for supplying a liquid into the container, the liquid being selected from the group consisting of a phase separation producing liquid, an active agent, a binder, and mixtures thereof; and

a drive source for rotating the target relative to the container such that the outer surface of the target contacts and is wetted by the liquid.

16. The apparatus of Claim 1, wherein the removing device comprises at least one doctor blade.

17. The apparatus of Claim 1, wherein the pick-up stage comprises:

at least one roll on which the removed electrostatically processed material is coiled; and

a second mechanism operatively connected to the at least one roll for rotating and/or translating the at least one roll relative to the collection stage, the second mechanism optionally comprising a second variable speed motor for rotating the at least one roll.

18. The apparatus of Claim 17, further comprising a release sheet applicator operable to apply a release sheet to the electrostatically processed material at the pick-up stage.

19. The apparatus of Claim 1, further comprising at least one radiation emitting device selected from the group consisting of a heater, a furnace, an ultraviolet light source, and an electron beam source, the at least one radiation emitting device being disposed between the collection stage and the pick-up stage and being operable to dry and/or cure the electrostatically processed material.

20. The apparatus of Claim 1, further comprising a corona treatment device disposed to subject the electrostatically processed material to a corona treatment.

21. The apparatus of Claim 1, further comprising at least one applicator device disposed to apply at least one substance to the

electrostatically processed material (i) at the collection stage, or (ii) downstream of the collection stage, wherein the at least one substance is selected from the group consisting of dopants, catalysts, drugs and active ingredients.

22. The apparatus of Claim 21, wherein the at least one applicator device applies at least one coating layer comprising the at least one substance to the electrostatically processed material.

23. The apparatus of Claim 1, further comprising a roll stand disposed between the collection stage and the pick-up stage.

24. The apparatus of Claim 1, further comprising at least one of (i) at least one thickness sensor operable to detect the thickness of the electrostatically processed material deposited on the collection stage, and (ii) at least one slack sensor operable to detect the amount of slack in the removed electrostatically processed material between the collection stage and the pick-up stage.

25. The apparatus of Claim 1, wherein:

(i) the collection stage includes:

at least one target on which the electrostatically processed material is deposited; and

a first mechanism operatively connected to the at least one target for rotating and/or translating the at least one target relative to the feeding stage; and

(ii) the pick-up stage includes:

at least one roll on which the removed electrostatically processed material is coiled; and

a second mechanism operatively connected to the at least one roll for rotating and/or translating the at least one roll relative to the collection stage; and

(iii) the apparatus further comprises:

at least one thickness sensor operable to detect the thickness of the electrostatically processed material deposited on the at least one target;

at least one slack sensor operable to detect the amount of slack in the removed electrostatically between the at least one target and the at least one roll; and

a controller electrically connected to the first mechanism, second mechanism, at least one thickness sensor and at least one slack sensor, the controller being operable to receive signals from the at least one thickness sensor and the at least one slack sensor and to control operation of the first mechanism and second mechanism based on the received signals.

26. A method for electrostatically processing a polymer formulation, comprising:

generating an electric field between a feeding stage and a collection stage of an apparatus;

supplying a polymer formulation to the feeding stage;

continuously ejecting electrostatically processed material from the feeding stage;

collecting the electrostatically processed material at the collection stage; and

continuously removing the electrostatically processed material from the collection stage.

27. The method of Claim 26, wherein:

the polymer formulation is selected from the group consisting of a polymer solution, dispersion, suspension, emulsion, mixtures thereof, and a polymer melt; and

the electrostatically processed material comprises fibers, droplets, beads, films, dry porous films, webs, mats and/or combinations thereof.

28. The method of Claim 26, wherein the electrostatically processed material has at least one micro-scale or nano-scale dimension.

29. The method of Claim 26, wherein the electrostatically processed material is continuously ejected through at least one nozzle of the feeding stage.

30. The method of Claim 26, wherein the polymer formulation comprises at least two different polymer formulations.

31. The method of Claim 26, wherein the polymer formulation comprises a first polymer formulation, the method further comprises mixing the first polymer formulation at the feeding stage with at least one substance selected from the group consisting of a second polymer formulation, a

solvent, at least one optional active component, and a mixture of the solvent and the at least one optional active component.

32. The method of Claim 26, wherein:

the feeding stage comprises a rotatable brush comprising an electrically conductive material; and

the method further comprises:

applying a voltage to the electrically conductive material;

continuously ejecting the electrostatically processed material at the feeding stage by rotating the brush such that the brush contacts and is wetted by the polymer formulation; and

removing the polymer formulation from the brush via the electric field.

33. The method of Claim 32, wherein:

the polymer formulation is contained in an open container; and

the method further comprises replenishing the polymer formulation in the container during the electrostatic processing of the polymer formulation.

34. The method of Claim 26, wherein:

the feeding stage comprises a first nozzle and a second nozzle; and

the method further comprises:

ejecting the electrostatically processed material from the first nozzle; and

supplying a cleaning liquid from the cleaning liquid source into the second nozzle.

35. The method of Claim 26, wherein:

the collection stage comprises at least one target on which the electrostatically processed material is deposited; and

the method further comprises:

rotating and/or translating the at least one target relative to the feeding stage during the electrostatic processing of the polymer formulation; and

optionally changing the rotation speed of the target during the electrostatic processing of the polymer formulation.

36. The method of Claim 35, wherein:

the at least one target comprises an electrically conductive outer portion having an outer surface; and

the method further comprises collecting the electrostatically processed material on the outer surface.

37. The method of Claim 26, wherein the electric field is generated by applying a voltage to the feeding stage or to an electrically conductive material, the electrically conductive material optionally being spaced from the collection stage.

38. The method of Claim 26, wherein:

the collection stage comprises a funnel-shaped target including a conical portion having an inner surface on which the ejected electrostatically processed material is deposited, and a flow passage extending through the target; and

the method further comprises:

emitting a gas to remove the electrostatically processed material from the inner surface of the conical portion; and

drawing a vacuum in the flow passage to draw the removed electrostatically processed material through the flow passage as a thread.

39. The method of Claim 26, wherein:

the collection stage comprises:

a target having an outer surface;

a container containing a liquid selected from the group consisting of a phase separation producing liquid, an active agent and a binder; and

the method further comprises rotating the target relative to the container such that the target contacts and is wetted by the liquid.

40. The method of Claim 26, wherein the electrostatically processed material is removed from the collection stage using at least one doctor blade.

41. The method of Claim 26, further comprising coiling the electrostatically processed material removed from the collection stage at a pick-up stage.

42. The method of Claim 41, wherein:

the pick-up stage comprises at least one roll on which the removed electrostatically processed material is coiled; and

the method further comprises rotating and/or translating the at least one roll relative to the collection stage during electrostatic processing of the polymer formulation.

43. The method of Claim 26, wherein:

the collection stage comprises at least one target on which the electrostatically processed material is collected, the at least one target being rotatable and/or translatable;

the pick-up stage comprises at least one roll on which the removed electrostatically processed material is coiled, the at least one roll being rotatable and/or translatable; and

the method further comprises adjusting the rotation of and/or translating the at least one target and/or the at least one roll during the electrostatic processing of the polymer formulation.

44. The method of Claim 43, further comprising:

determining the thickness of the electrostatically processed material collected on the at least one target; and

adjusting the rotation rate of and/or translating the at least one target and/or the at least one roll during the electrostatic processing of the polymer formulation when the determined thickness varies from a selected thickness.

45. The method of Claim 43, further comprising:

determining the amount of slack in the electrostatically processed material at one or more locations between the at least one target and the at least one roll; and

adjusting the rotation rate of and/or translating the at least one target and/or the at least one roll during the electrostatic processing of the polymer formulation when the determined amount of slack varies from a selected amount of slack.

46. The method of Claim 26, further comprising applying a release sheet to the electrostatically processed material removed from the collection stage.

47. The method of Claim 26, further comprising curing and/or drying the electrostatically processed material removed from the collection stage using at least one radiation emitting device selected from the group consisting of a heater, a furnace, an ultraviolet light source, and an electron beam source.

48. The method of Claim 26, further comprising subjecting the electrostatically processed material removed from the collection stage to a corona treatment.

49. The method of Claim 26, further comprising applying at least one substance selected from the group consisting of dopants, catalysts, drugs, and active ingredients to the electrostatically processed material (i) at the collection stage, or (ii) after being removed from the collection stage.

50. The method of Claim 49, wherein the at least one substance is at least one coating layer comprising the at least one substance applied to the electrostatically processed material.

51. The method of Claim 26, further comprising compacting the electrostatically processed material removed from the collection stage to a desired thickness and/or stretching the electrostatically processed material.

52. The method of Claim 26, further comprising detecting the thickness of the electrostatically processed material deposited on the collection stage using at least one thickness sensor.

53. The method of Claim 41, further comprising detecting the amount of slack in the removed electrostatically processed material between the collection stage and the pick-up stage using at least one slack sensor.

54. The method of Claim 41, wherein:

(i) the collection stage includes:

at least one target on which the electrostatically processed material is deposited; and

a first mechanism operatively connected to the at least one target for rotating and/or translating the at least one target relative to the feeding stage; and

(ii) the pick-up stage includes:

at least one roll on which the removed electrostatically processed material is coiled; and

a second mechanism operatively connected to the at least one roll for rotating and/or translating the at least one roll relative to the collection stage; and

(iii) the method further comprises:

detecting the thickness of the electrostatically processed material deposited on the at least one target with at least one thickness sensor;

detecting the amount of slack in the removed electrostatically between the at least one target and the at least one roll with at least one slack sensor; and

controlling operation of the first mechanism and second mechanism using a controller which receives signals from the at least one thickness sensor and the at least one slack sensor, and controls operation of the first mechanism and second mechanism based on the received signals.

55. The method of Claim 26, wherein the electrostatically processed material is (i) electrostatically spun, or (ii) electrostatically sprayed.

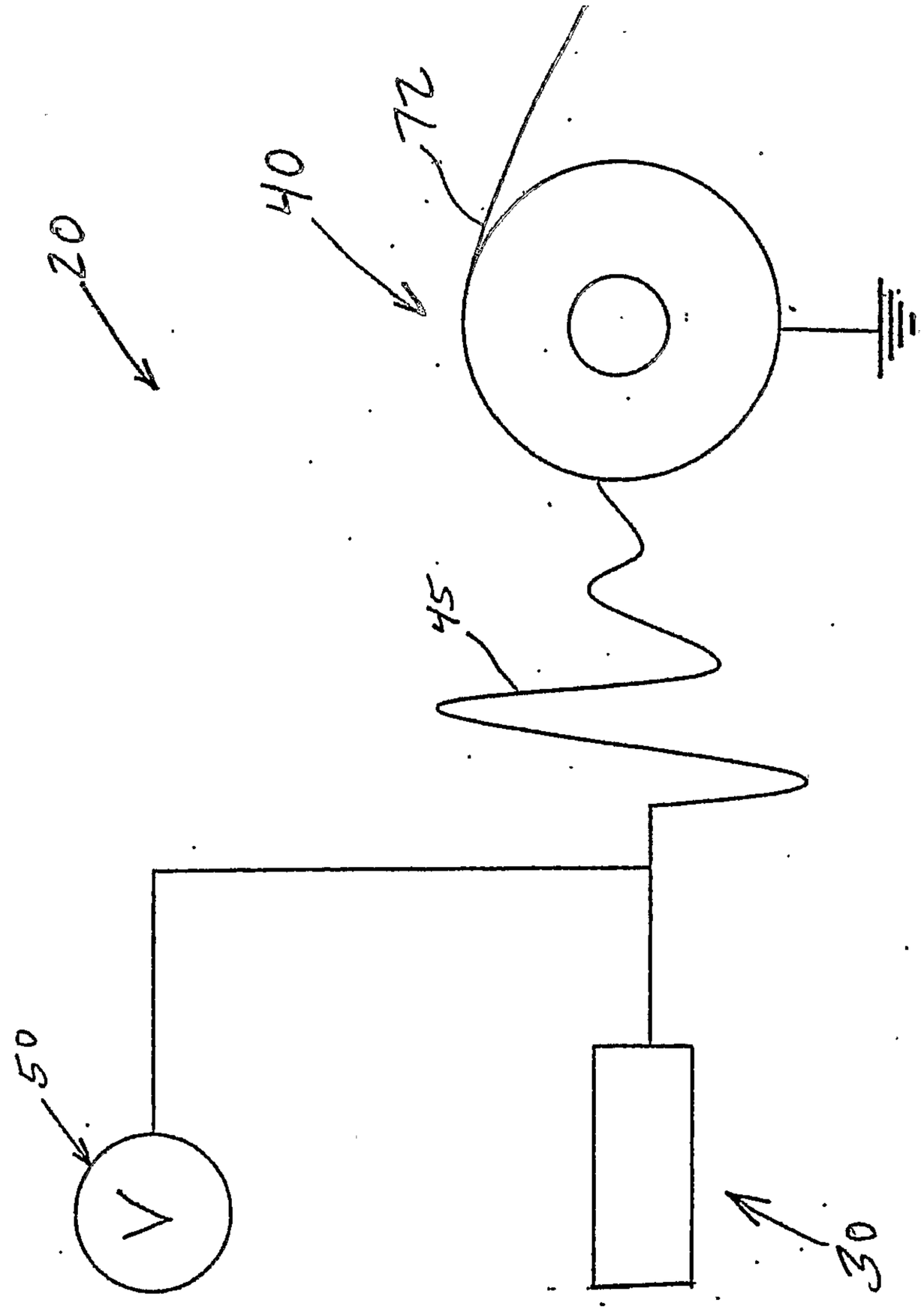

Figure 1

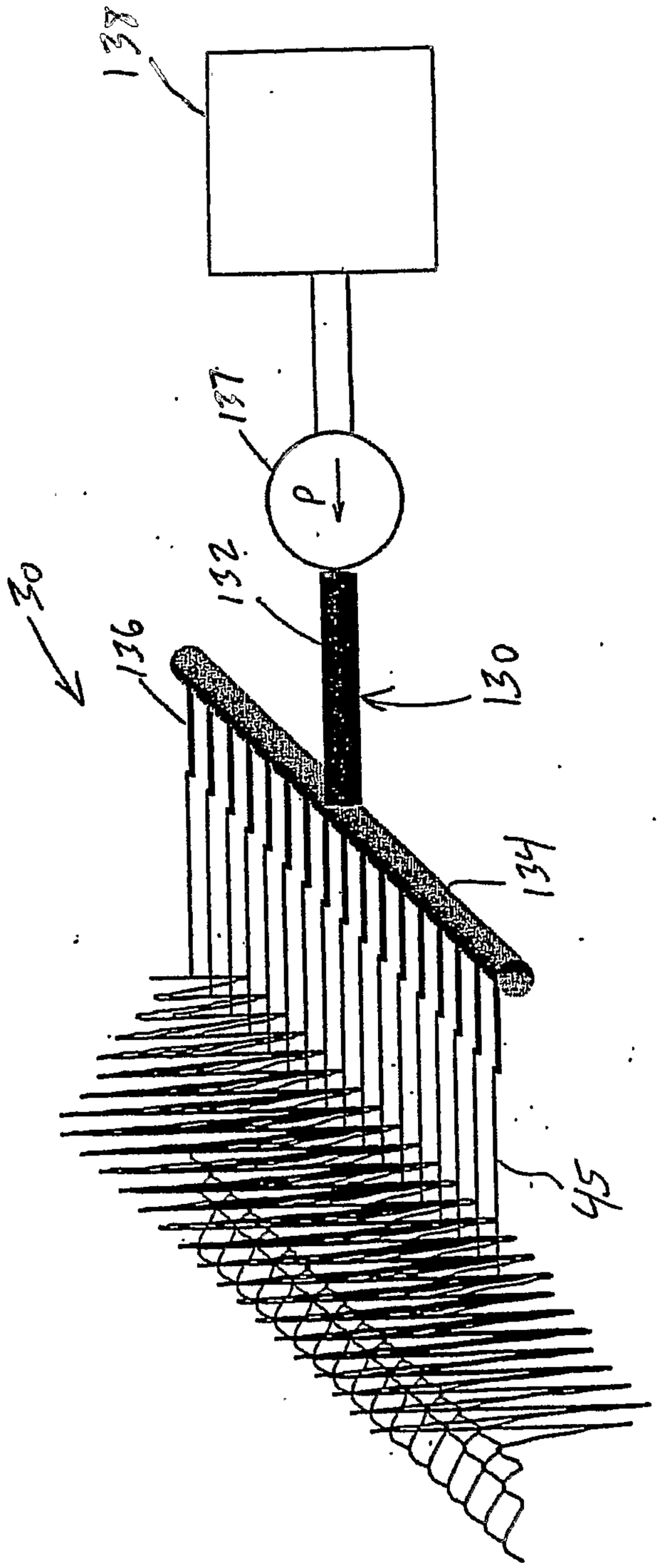

Figure 2

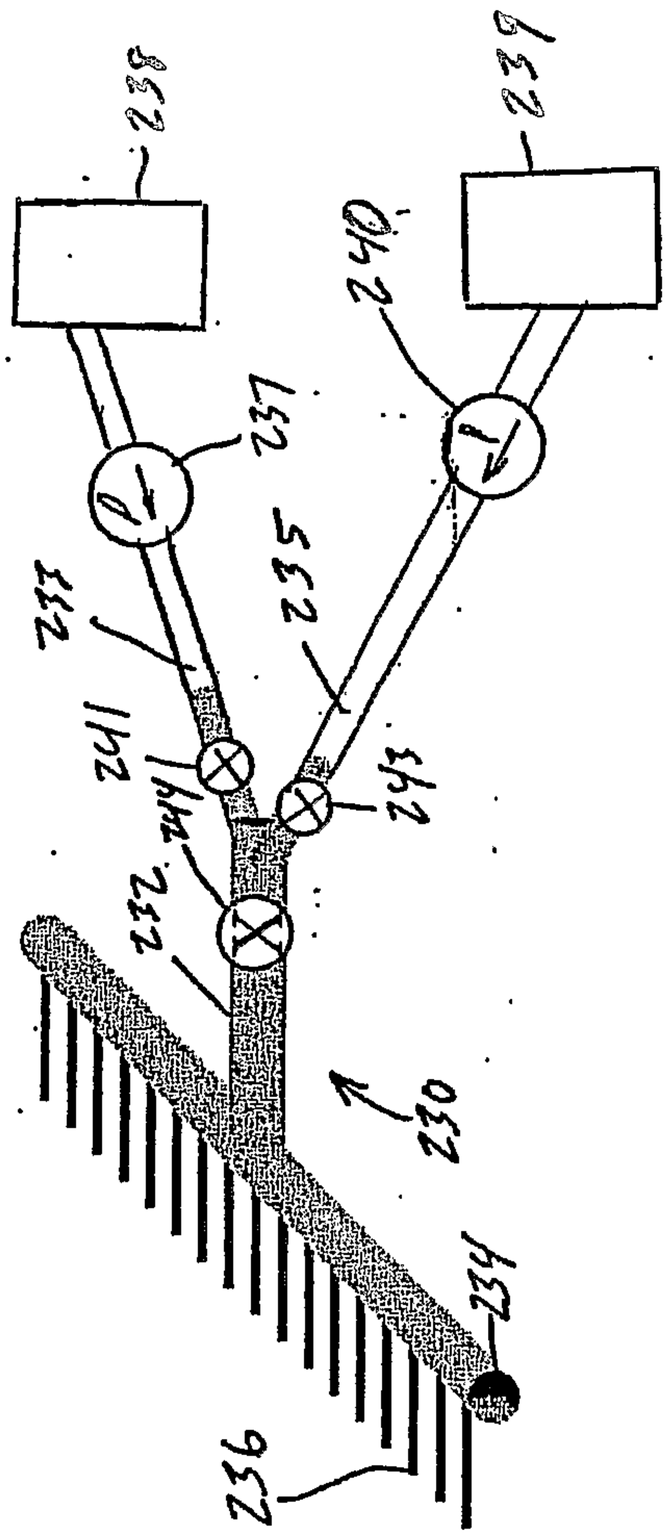

Figure 3

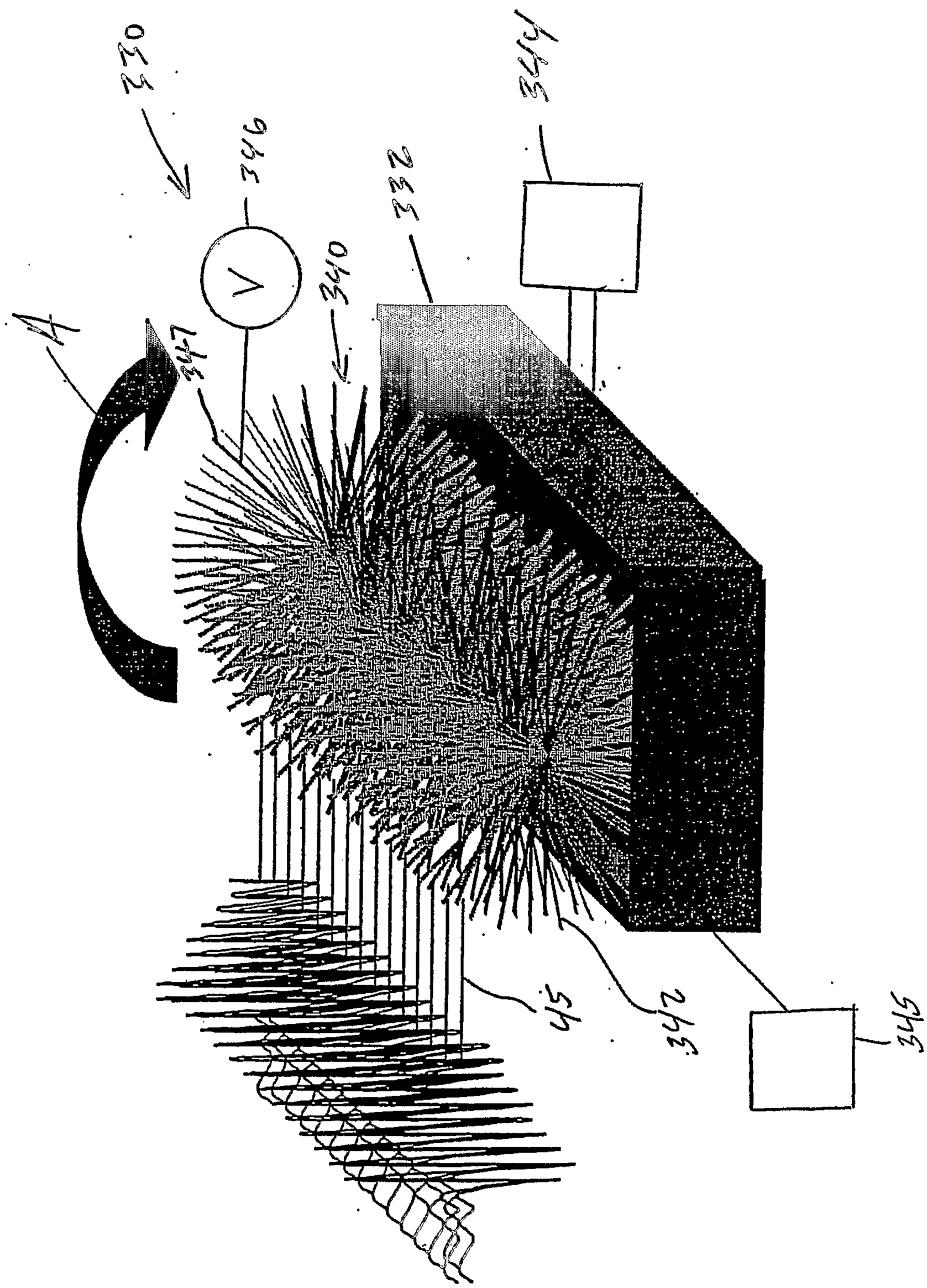

Figure 4

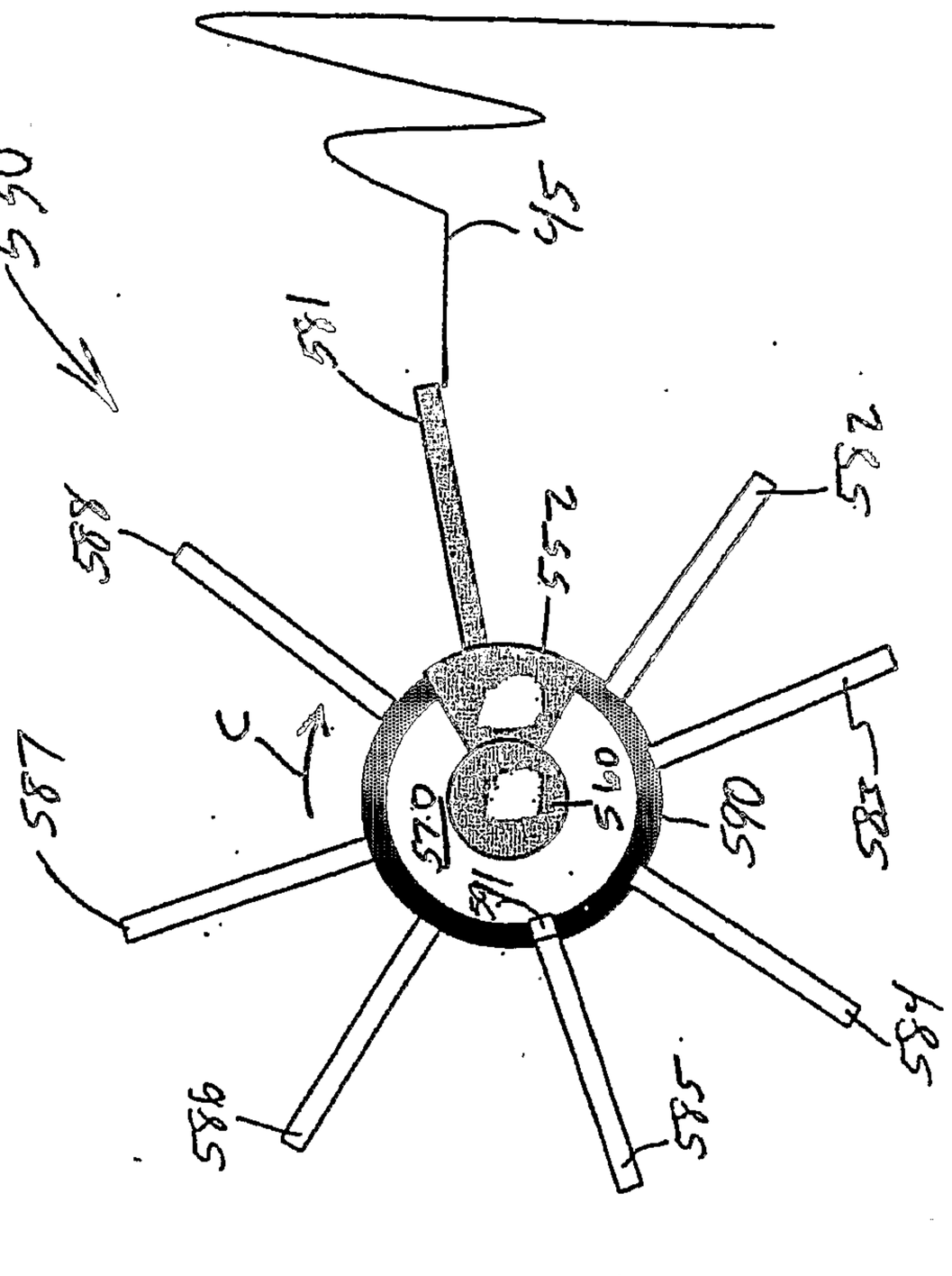

Figure 6

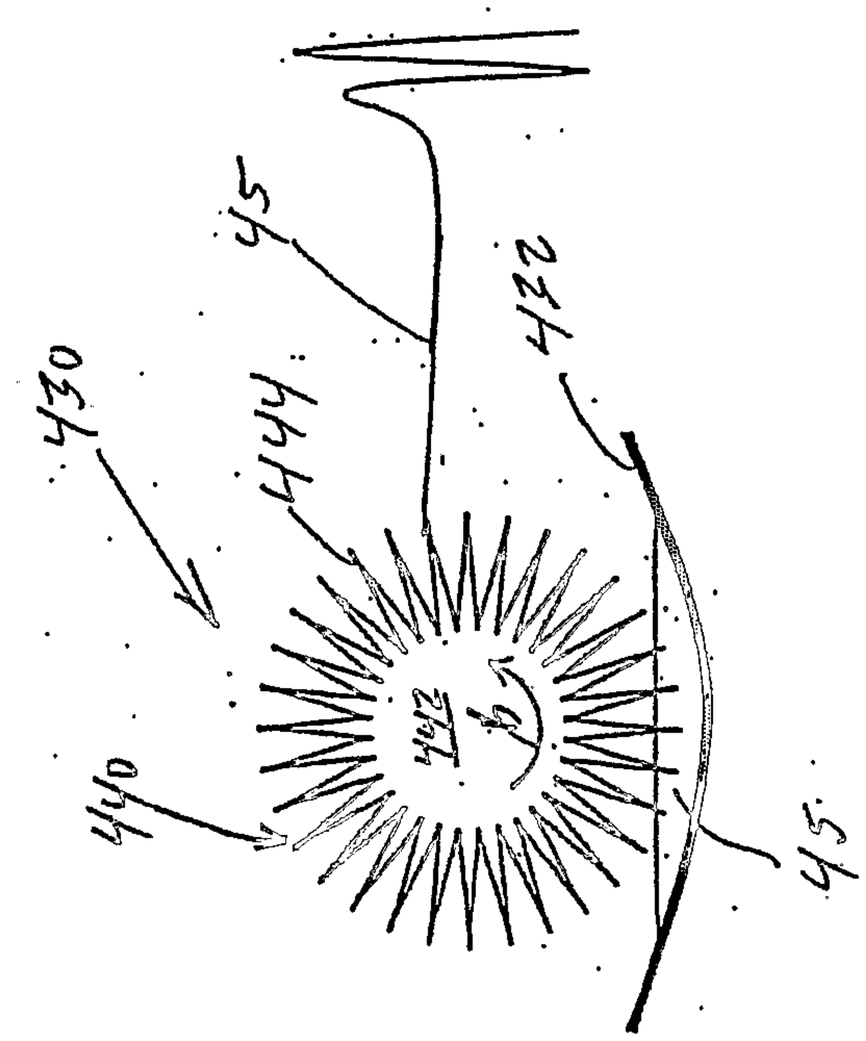

Figure 5

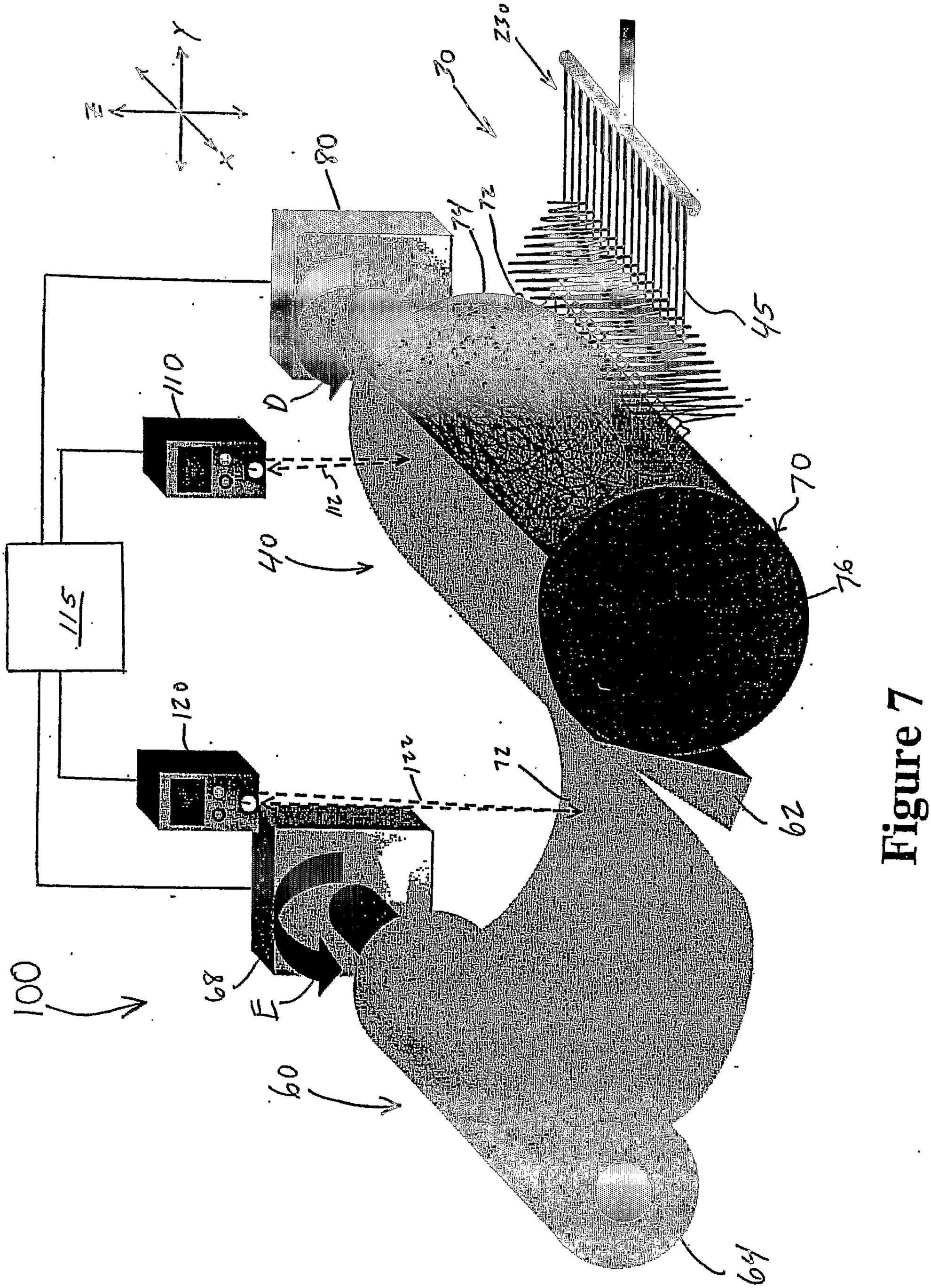
Y
Z
X
80
74
72
45
230
70
110
D
112
40
115
120
122
72
62
68
E
100
60
76
64

Figure 7

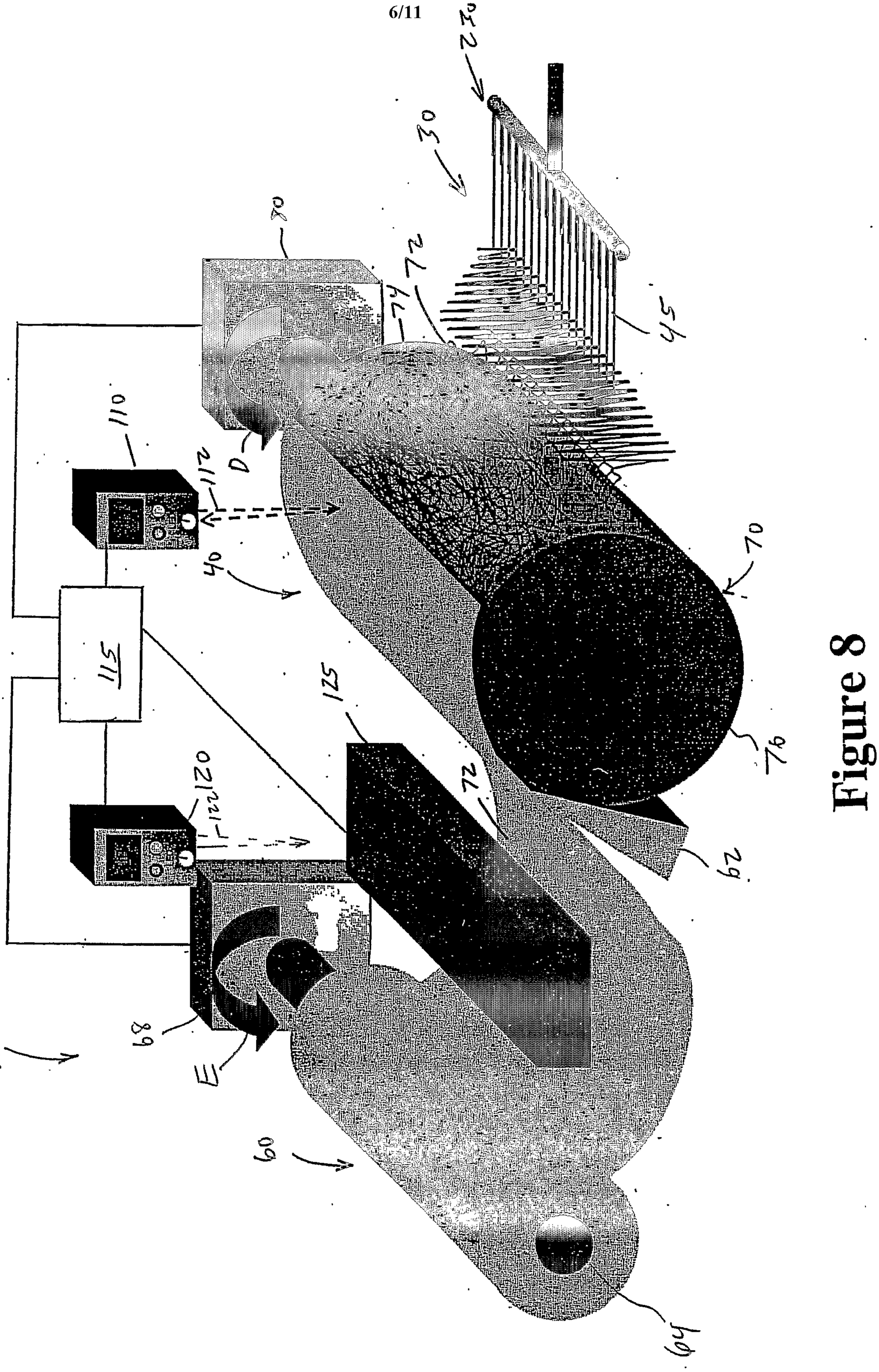

Figure 8

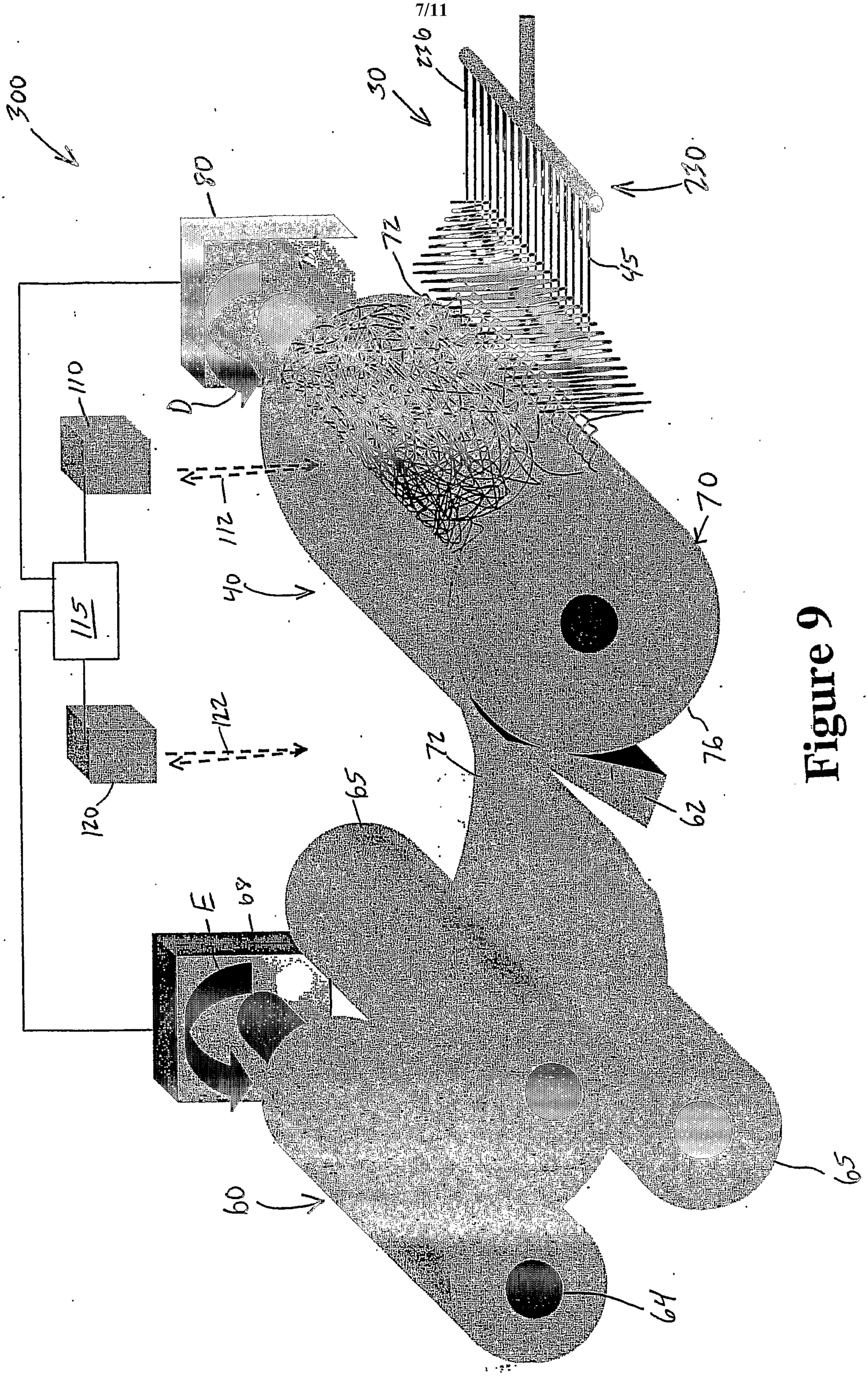
300
80
230
30
236
72
45
110
N
112
40
70
115
122
N
120
27
76
29
59
65
89
60
64

Figure 9

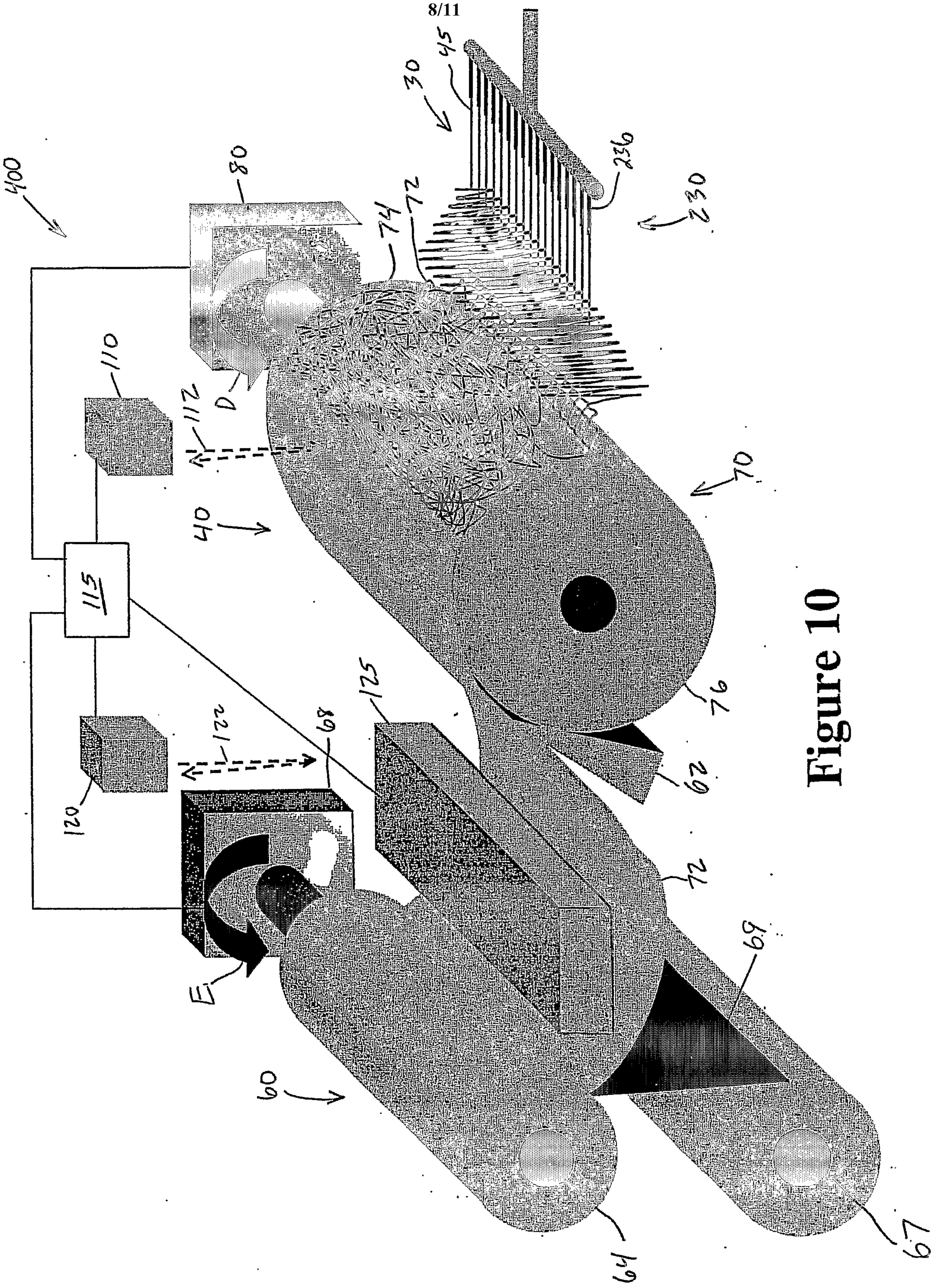
400
80
74
72
30
45
236
230
110
112
D
40
115
120
221
125
89
70
29
21
69
60
64
67

Figure 10

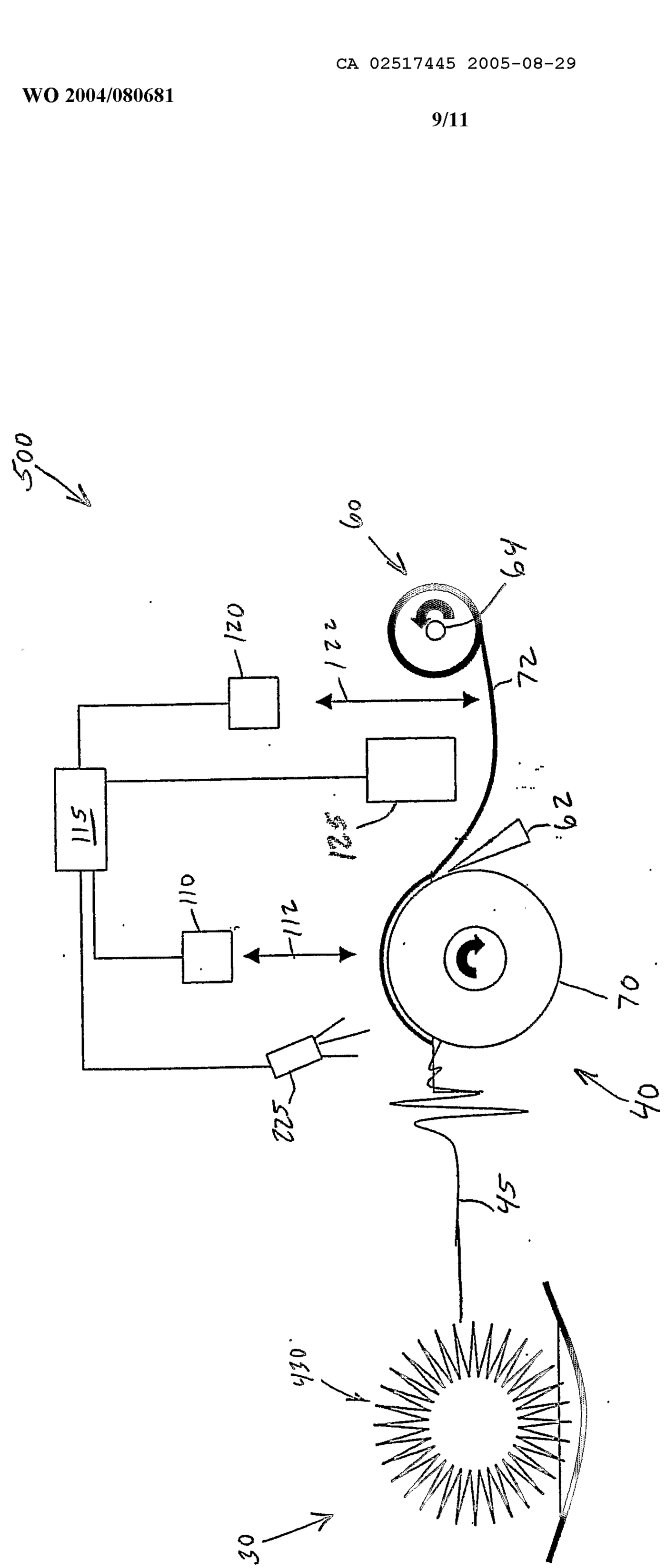

Figure 11

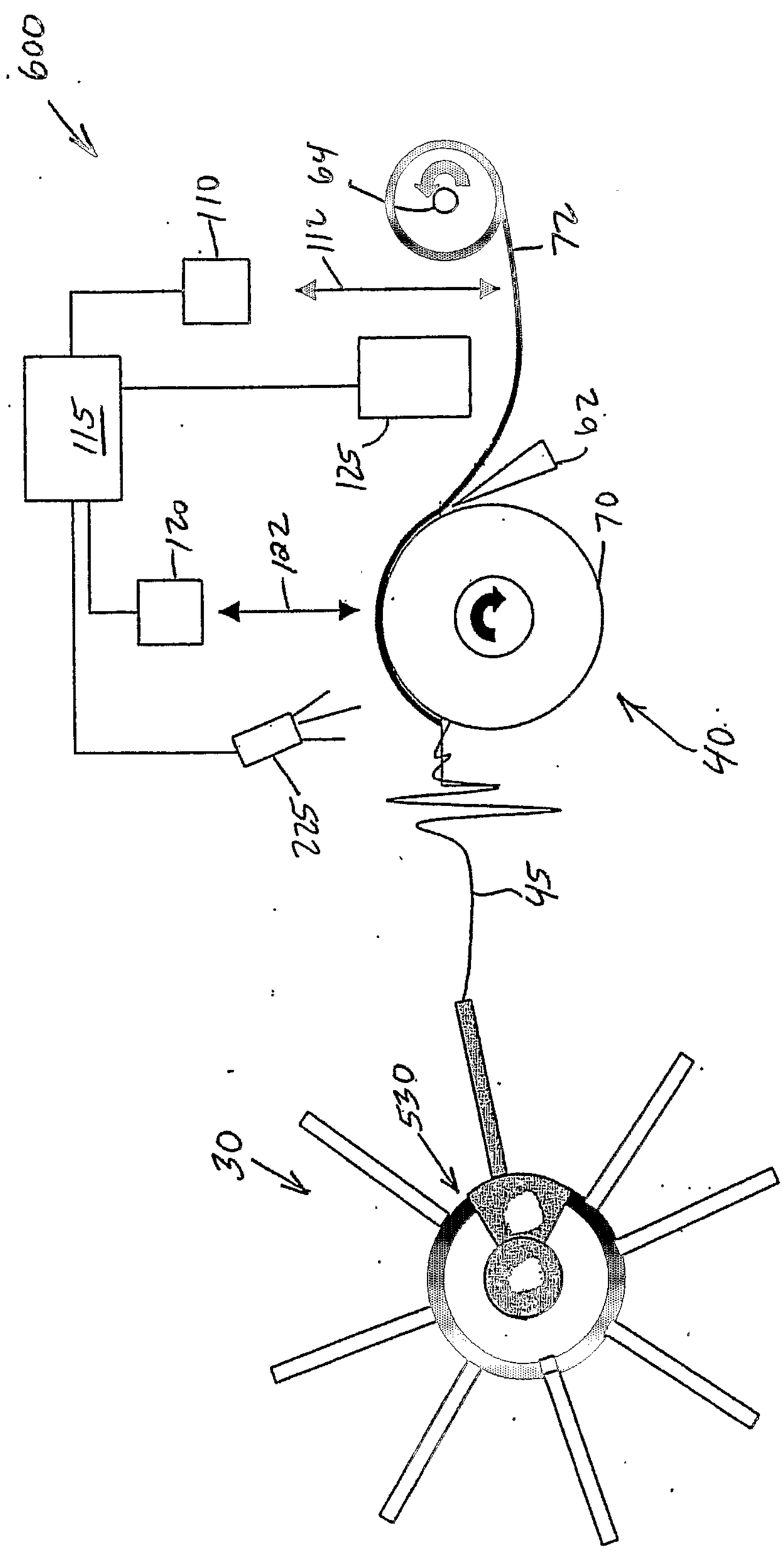

Figure 12

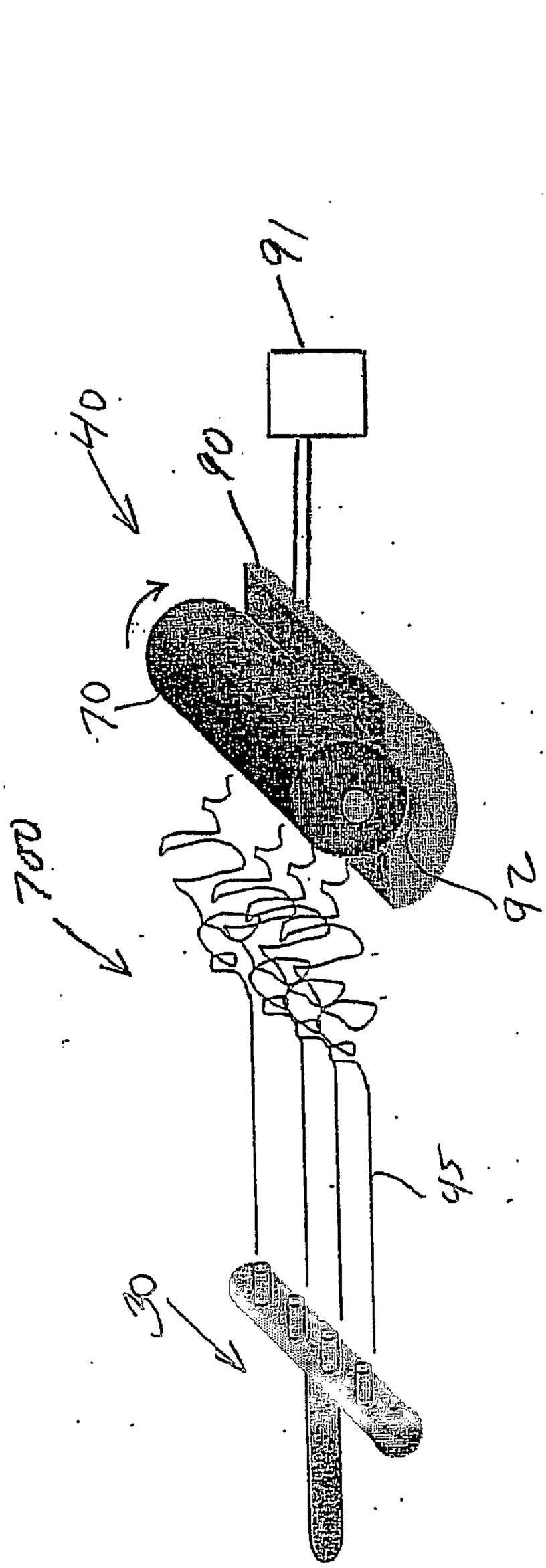

Figure 13

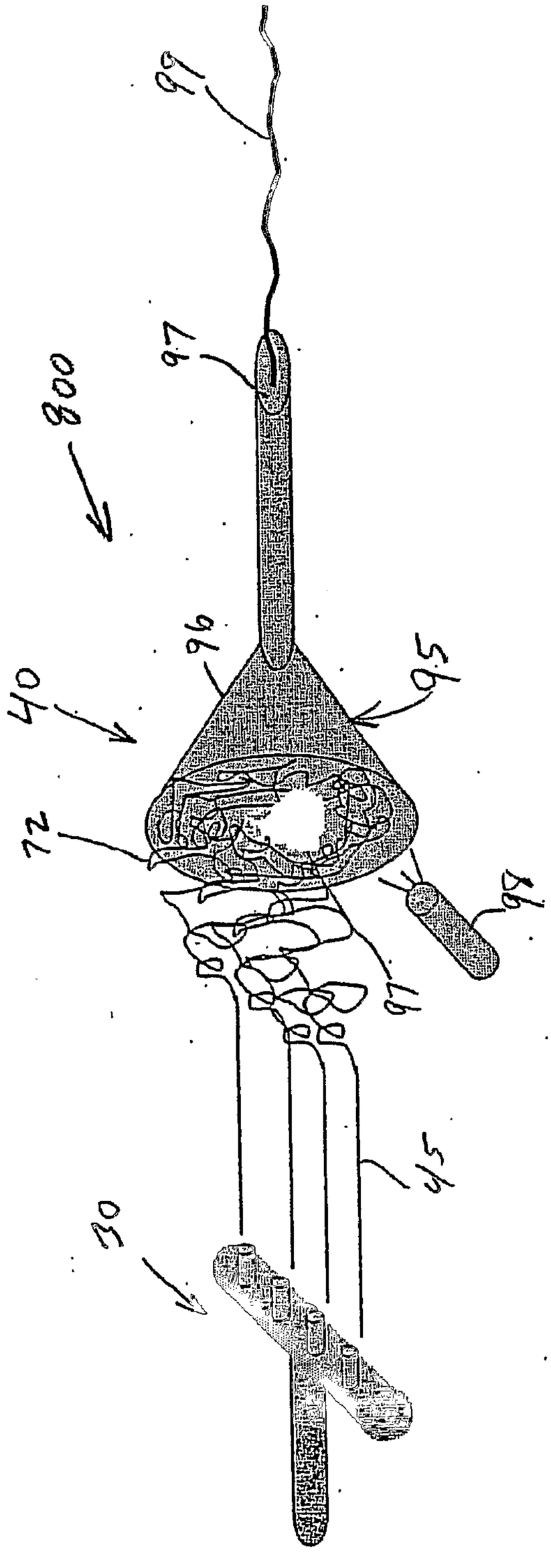

Figure 14

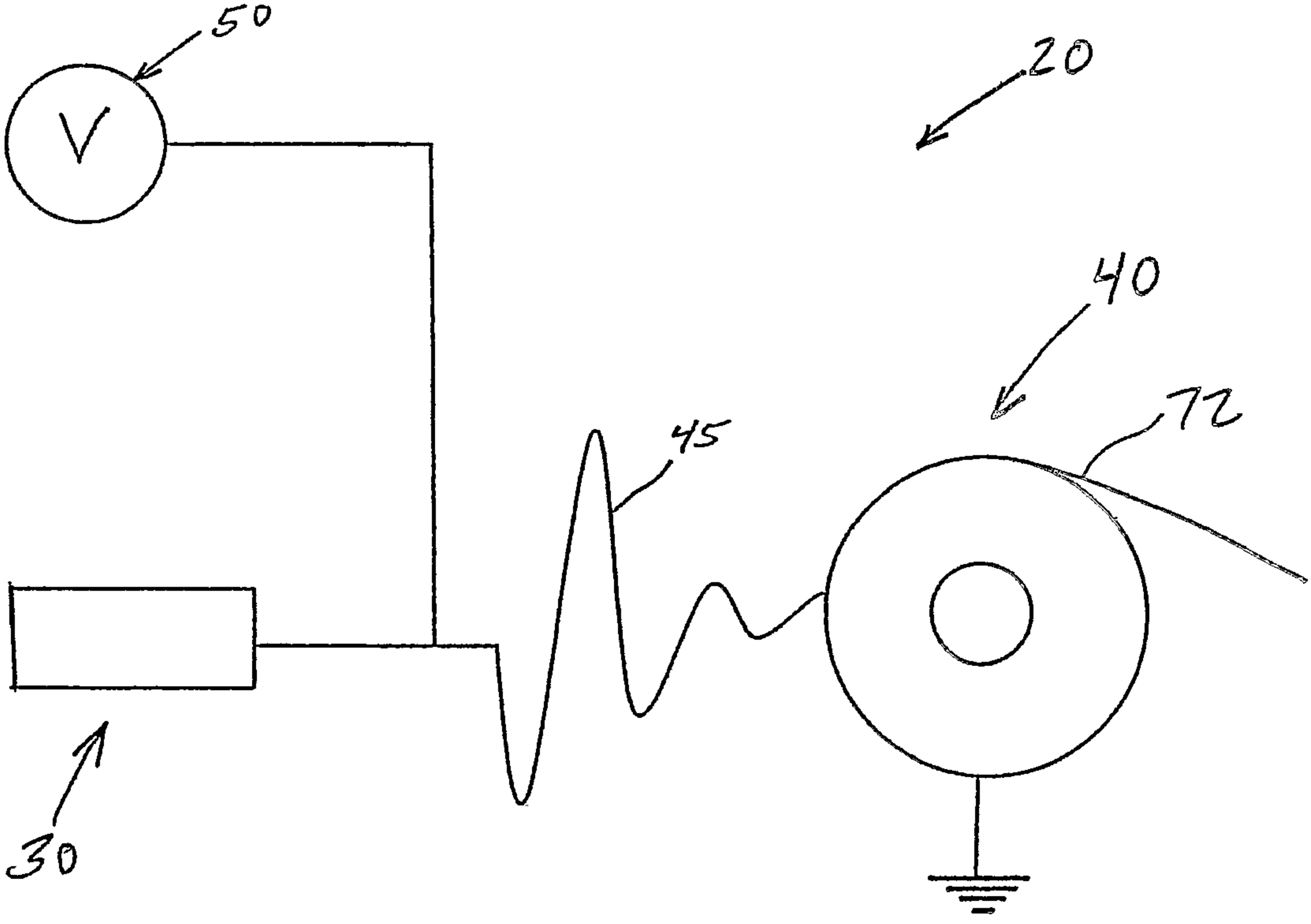
50
V
20
40
72
45
30