United States Patent [19]

Naydan et al.

[11] **3,796,463**

[45] **Mar. 12, 1974**

[54] **PROCESS AND APPARATUS FOR MINING BY HYDROELECTRIC PULSED LIQUID JETS**

[75] Inventors: **Theodore T. Naydan; Walter W. Aker,** both of Schenectady, N.Y.

[73] Assignee: **Environment/One Corporation,** Schenectady, N.Y.

[22] Filed: **Apr. 20, 1972**

[21] Appl. No.: **246,078**

Related U.S. Application Data

[62] Division of Ser. No. 82,319, Oct. 20, 1970, Pat. No. 3,700,169.

[52] **U.S. Cl.** **299/14,** 299/17

[51] **Int. Cl.** **E21c 25/60**

[58] **Field of Search** 299/14, 17; 175/16, 67; 239/101, 102

[56] **References Cited**

UNITED STATES PATENTS

910,500	1/1909	Case	299/14 X
1,284,398	11/1918	McKinlay	299/14 X
1,554,723	9/1925	Hamilton	299/14 X
3,306,665	2/1967	Lobbe	299/17 X
3,521,820	7/1970	Cooley	239/101

Primary Examiner—Ernest R. Purser

Attorney, Agent, or Firm—Charles W. Helzer

[57] **ABSTRACT**

Process and apparatus for mining by high energy pulsed liquid jets produced by the discharge of electrical energy through a relatively incompressible liquid in an essentially closed chamber having a shaped outlet nozzle.

12 Claims, 7 Drawing Figures

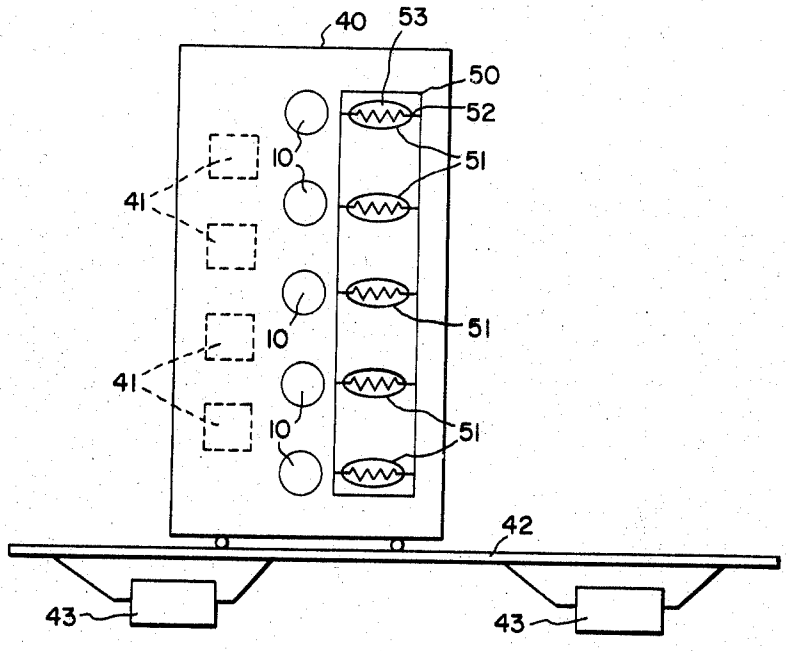

FIG. 1

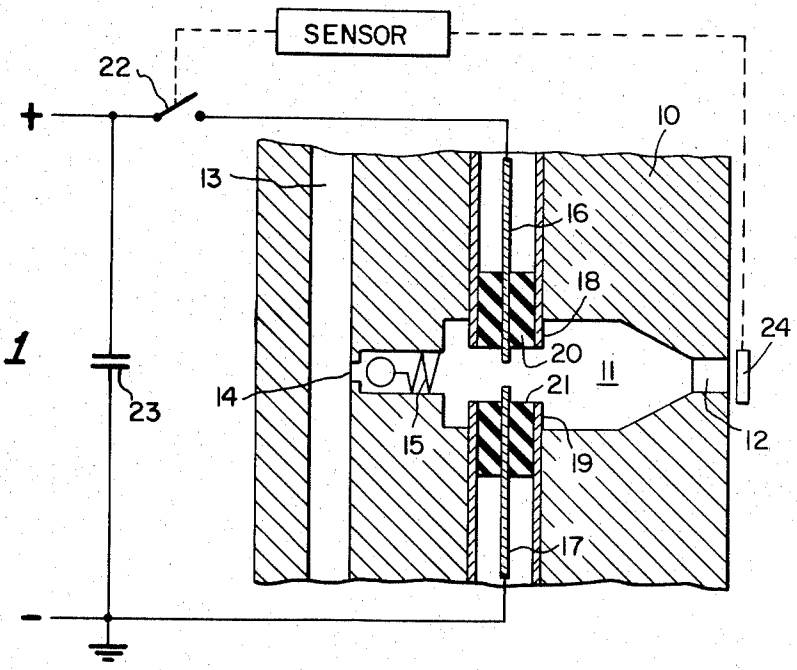
SENSOR
22
+
10
13
16
18
24
20
11
14
21
23
15
19
12
17
-

FIG. 2

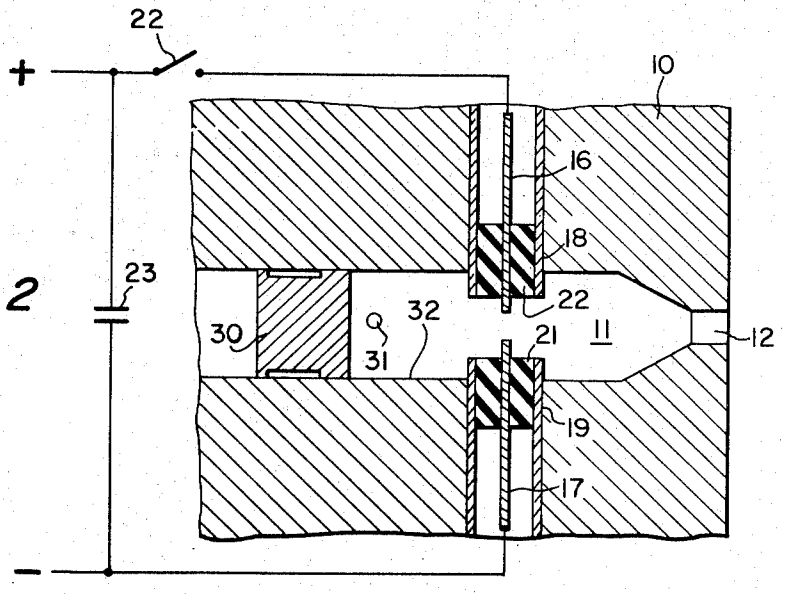
22
+
10
16
18
23
22
32
30
21
11
12
31
19
17
-

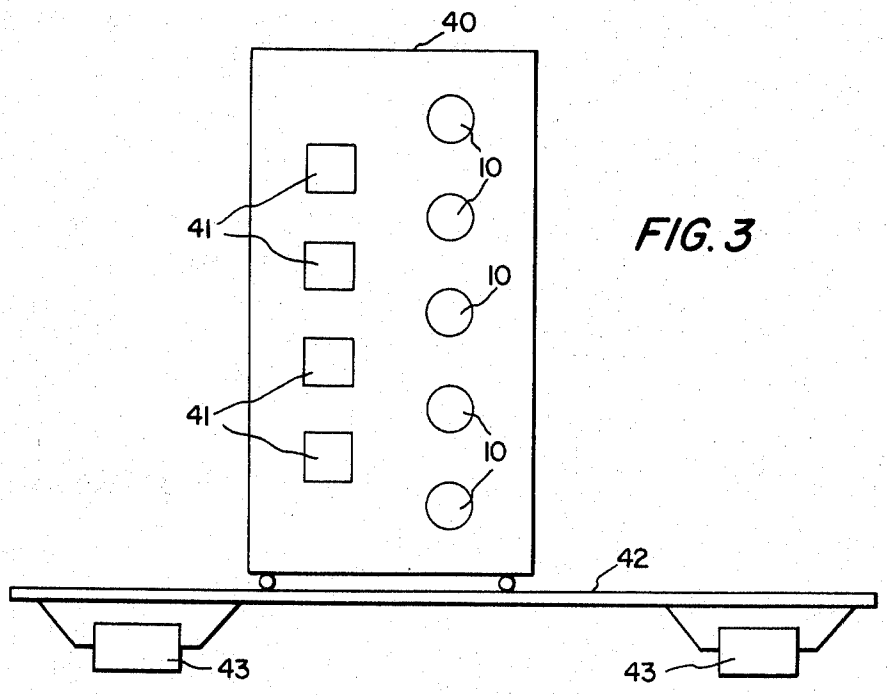
40
10
41
10
41
10
42
43
43

FIG. 3

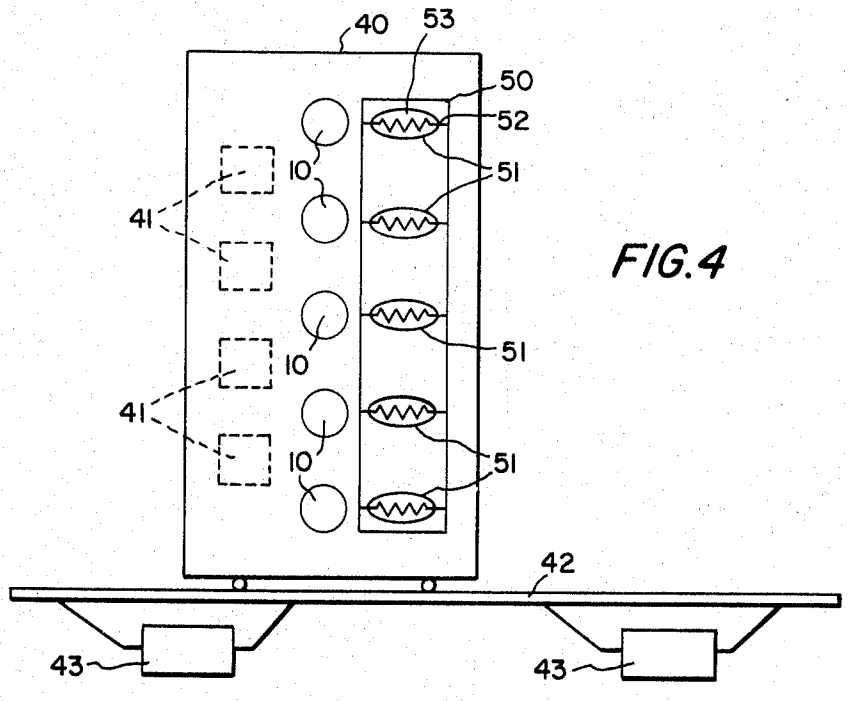
40
53
50
52
10
51
41
51
10
41
51
10
51
42
43
43

FIG. 4

FIG. 5

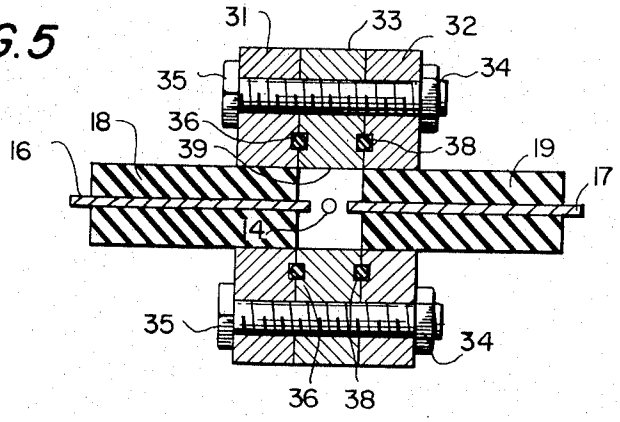

FIG. 6

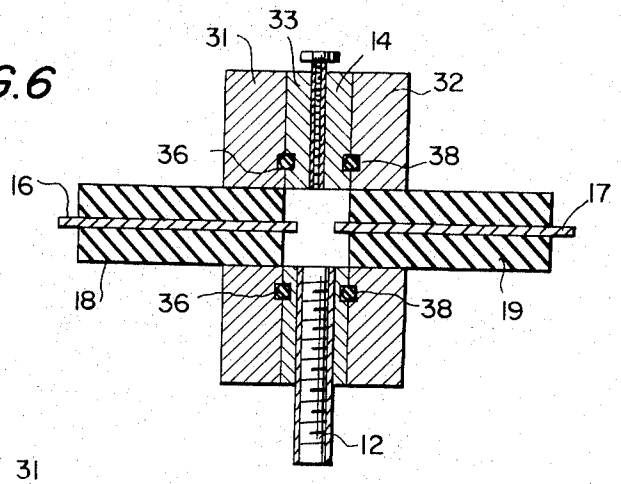

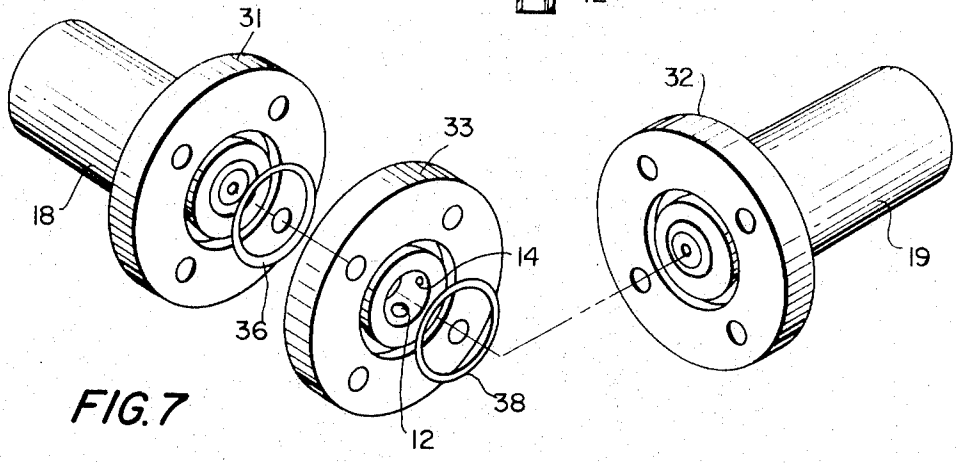

FIG. 7

PROCESS AND APPARATUS FOR MINING BY HYDROELECTRIC PULSED LIQUID JETS

This is a division of application Ser. No. 82,319 filed Oct. 20, 1970 and now U.S. Pat. No. 3,700,169, issued Oct. 24, 1972.

BACKGROUND OF THE INVENTION

1. Scope of the Invention

This invention relates generally to a method and apparatus for generating pulsed water jets and, more particularly to a method and apparatus for the generation of high repetition rate pulsed water jets by the discharge of electrical energy.

2. The Prior Art

In the field of subterranean mining there has heretofore been employed conventionally a "moil" which is a metal cutting tool used for cutting away hard rock material in the mining area. These cutting tools are made of hard metal, but they erode during the cutting process, thereby limiting the amount of material removed and curtailing the speed of mining.

In recent years, due to the increased need for rapid underground excavation for the removal of valuable material and for the development of subterranean channels for rapid transit and for materials handling, hydraulic mining techniques have been developed with the goal of long life, low cost and easily maintainable equipment. Such hydraulic techniques have included the use of hydraulic amplifiers and jack hammer type oscillators to generate the requisite peak pressures for accelerating water missiles to high velocities. Such equipment is bulky and has an inherent high noise factor producing unsuitable working conditions.

SUMMARY OF THE INVENTION

In accordance with the present invention, it has been discovered that the discharge of stored electrical energy from a capacitor or other suitable source into a closed container of a suitable fluid such as water by means of proper coupling electrodes will generate high temperature channel between the electrodes. This discharge will produce three effects: (1) a high pressure sonic front travelling outward from the discharge channel: (2) a high temperature expanding gaseous bubble containing superheated steam and a substantial amount of ionized species and neutral molecules: and (3) a continuum of high intensity light coincident with the time of discharge. A study of a typical system according to the present invention has revealed that the conversion from electrical energy to heat, sound and light is highly efficient, utilizing about fifty percent (50 percent) of the total discharge energy, the remainder being lost in the external circuitry.

Delivery of the high voltage electric energy to the spark gap is at a faster rate than the ability of the fluid medium to absorb the heat generated thereby. Consequently, the fluid medium in the gap is vaporized, undergoing at least partial ionization. Upon discharge of the electrical energy, a gaseous bubble is formed in the channel between the electrodes. Expansion of the bubble takes place during the relatively short time period of energy release, producing a shock wave in the relatively incompressible liquid. Since the reaction vessel is effectively a closed container except for the jet nozzle at the time of discharge, this shock wave meets mechanical resistance at all directions except through the nozzle opening. Thus a pulsed liquid jet is forced through the jet nozzle opening. This pulsed liquid jet is in the form of a liquid slug and is under extremely high pressure. When directed onto or against a desired surface, the Kinetic energy of the liquid slug is capable of useful work such as shaping, fracture and the like.

Several methods can be employed to supply the liquid to the reaction chamber. A suitable method would include a continuous liquid feed through the jet opening, producing a continuous stream out of the nozzle when unpulsed and an automatically pulsed stream when the electrical circuitry is actuated.

The apparatus of the present invention can also function in an open system whereby the electrode gap area is replenished by the action of the surrounding fluid medium. A mechanical shutter can be employed for the nozzle opening in such a manner that uncovering the nozzle opening automatically triggers the electrical discharge.

A continuous and predictable electrical discharge is important to the successful application of the present application. This can be provided by suitable electrode design. The use of ungrounded sleeves for the electrodes will produce a capacitive voltage divider across the electrode gap with the shell of the apparatus connected to the central junction point of the capacitors. Thus upon initiation of the discharge cycle, the high voltage starting gradients from the side wall of the apparatus to the sleeves will be half the gradient to the electrodes, providing a controlled and predictable streamer discharge.

A freely accelerating piston can also be employed to supply the liquid to the reaction chamber. In such an application, the piston will deliver the liquid at a high pressure, which pressure will be even further increased by the discharge of electric energy. Thus the magnitude of the force possessed by the resultant liquid jet is markedly increased over that supplied by the piston.

The electrohydraulic liquid jet units of the present invention can also be used in combination with known mining techniques and equipment. The device of the present invention can be used in combination with tungsten carbide or very hard steel bits in the cutting of hard rock to ease the job of cutting and to increase the life of the bits. In such an application, a multiplicity of electrohydraulic jet units can be arranged vertically for travel along a mine wall preceding the travel of the cutter bits along the mine face. By this arrangement, the water slugs will lacerate and weaken the wall by forming horizontal slabs. Subsequent cutting by the bits is much easier and the resultant reduction in bit wear and erosion increases bit life.

The electrohydraulic jet units can also be employed to drive a water-soluble resin into the bedding planes of a mine wall when such resin is added to the liquid supplied to the jet. These water-soluble resins, such as Polyox, will reduce the coefficient of friction between adjacent surfaces by as much as 68 percent when dispersed in water to a concentration of 30 ppm. The use of such a mixture will cause the bedding planes to part more easily and will also serve as a lubricant for cutting bits which follow the electrohydraulic jets.

The application of heat to weaken rock and cause it to spall and crack in depth is well known. If the percentage of water in the rock is proper, the spalling, weakening and cracking of the rock is greatly enhanced. Where strata are encountered which are defi-

cient in water content, the electrohydraulic jets of the present invention can be used to saturate the bedding planes prior to the application of heat. In such application, the heat and high pressure jets can be applied simultaneously or alternately, the heat causing expansion stresses in the rock and the slugs of water tending to cool and crack the rock. Subsequent cutting by mechanical bits can be employed where desired.

In some applications of mining techniques, a rock slab will break loose but will hang up on the mine face due to an effect known as "keystoning." Such problems are eliminated by the present invention since the liquid jets act to pry loose the rock.

The electrohydraulic jet units of the present invention can be arranged in any desired configuration to achieve a desired result. For example, when positioned vertically and arranged in a circle, several units will act as a drill. When used alone or in combination with a standard metal rotary bit, a self flushing drill is achieved.

DESCRIPTION OF THE DRAWINGS

The features of this invention together with further objects and advantages thereof, may best be understood by reference to the accompanying drawings wherein:

FIG. **1** is a cross-sectional view of one embodiment of an electrohydraulic jet apparatus according to the present invention;

FIG. **2** is a cross-sectional view of a second embodiment of an electrohydraulic jet apparatus according to the present invention;

FIG. **3** is a schematic illustration of a plow assembly employing a plurality of electrohydraulic jet apparatus according to the present invention in combination with a plurality of metal moils;

FIG. **4** is a schematic illustration of a plow assembly employing a plurality of electrohydraulic jet apparatus according to the present invention, in combination with a plurality of heating units and a plurality of metal moils;

FIGS. **5** and **6** are cross-sectional views of an alternative electrohydraulic jet unit; and

FIG. **7** is an exploded view of the alternative electrohydraulic jet unit.

DESCRIPTION OF THE PREFERRED EMBODIMENTS

The process and apparatus can best be described with reference to the drawings. For purposes of illustration, a single electrohydraulic jet apparatus will be described. It will be readily understood that such jets may be employed singly or in any desired number arranged in any configuration designed to achieve a desired result.

Specifically, the apparatus includes a container **10** which defines a reaction chamber **11** having a nozzle **12.** Liquid is supplied to the container through a pressurized line **13** and enters the reaction chamber **11.** The liquid preferably is water but may comprise any suitable non-explosive fluid having characteristics tailored for a particular operation such as improved lubricating qualities for enhancing the performance of mechanical moils. The fluid enters reaction chamber **11** through a port **14.** This port may be provided with valve means **15** operable to seal the reaction chamber **11** during production of the jet. Coupling electrodes **16, 17** extend into the reaction chamber **11.** These electrodes **16, 17** are insulated from the container **10** by insulating means **18, 19.** Metallic sleeves **20, 21** are provided for each electrode **16, 17.** The sleeves **20, 21** are mechanically and electrically connected to container **10** and are not grounded. The electrodes **16, 17** are connected through switch means **22** to a source of electrical energy which may be a capacitor bank **23** which is in turn connected across a high voltage power source (not shown). Any suitable source of electrical energy can be employed in this embodiment. In addition to the preferred capacitor bank, induction coils, transformers and the like may be used. For illustration purposes the source of electrical energy has been shown as a capacitance **23.** Because the electrode sleeves **20, 21** and container **10** are not grounded, they serve as a capacitive voltage divider across the gap between the electrodes **16, 17** when the switch means **22** is actuated. One plate of the capacitance **23** is connected to ground at to the electrode **17.** Upon actuation of the switch means **22** which can be a gas discharge tube, a triggered gap or the like, the high voltage starting gradients from the side walls of the container **10** to electrodes **16, 17** are always half the gradient across the electrodes. This ensures a controlled and predictable streamer discharge across the electrode gap. The insulating means **18, 19** also serve to prevent unpredictable firing across the gap after erosion of the electrodes by ensuring that the gradient between the electrodes is greater than the electrode to wall gradient.

Prior to actuation of the device, the reaction chamber is substantially completely filled with liquid supplied through the port **14.** When the electrical energy stored in the capacitance **23** is discharged across the electrodes **16, 17** by actuation of the switch means **22,** a high temperature channel is generated between the electrodes **16, 17** with the following effects: (1) a high pressure sonic front travelling outward from the discharge channel: (2) a high temperature expanding gaseous bubble containing superheated steam and a substantial amount of ionized species and neutral molecules: and (3) a continuum of high intensity light coincident with the time of discharge. Studies have shown that the conversion from electrical energy to heat, sound and light is highly efficient, utilizing about fifty percent (50 percent) of the total discharge energy, the remainder being lost in the external circuitry. Some of the sound produced within the container **10** and all light produced therein is absorbed in the liquid and reconverted into usable heat. The time of discharge of the capacitor circuit is of the order of 50 microseconds. During this interval about 27,000 horsepower of total energy per kilojoule of energy supplied is released into the liquid in the reaction chamber **11** while the liquid is in a substantially static condition. The extremely high temperatures (20,000° – 30,000° K) and pressures (100,000–200,000psi) developed in the channel between the electrodes **16, 17** cause the gaseous bubble formed therein to expand at a very rapid rate. Check means such as ball valve **15** serve to close the liquid entry port **14** and thus the liquid confined within the reaction chamber **11** meets mechanical resistance in all directions except through the nozzle opening **12.** This nozzle opening **12** is preferably located on-center with the position of the spark discharge between the electrodes **16, 17.**

If desired, shutter means **24** may be employed to close the nozzle opening **12** between pulses. The shutter means **24** can be actuated electrically or mechanically and may be connected through a circuit **25** to a sensor **26** which is in turn connected to the switch means **22.** The sensor **26** acts to synchronize the opening of the shutter **24** with the discharge of the capacitance **23** to effect proper operation. Valve means or the like can be employed in place of the shutter **24.** For example, an electromagnetically actuated solenoid valve could be used to alternately open and close the nozzle opening **12.**

Referring to FIG. **2,** an embodiment is shown in which a freely accelerating piston **30** is employed to compress the liquid in the reaction chamber **11** prior to discharge of the capacitor **23** between the electrodes **16, 17.** The liquid is supplied to the reaction chamber **11** through suitable means such as port **31.** In this embodiment, the piston **30** is driven at a high rate of speed through a cylinder **32** by external power means (not shown). The piston **30** picks up the liquid supplied by the port **31** and accelerates this liquid during delivery into reaction chamber **11.** The liquid thus enters the reaction chamber **11** at a high rate of speed and with considerable force. It fills the reaction chamber **11** and at the instant that the chamber is filled with the substantially incompressible fluid, i.e., at top-dead-center of the piston, switch means **22** cause discharge of the capacitance **23** between the electrodes **16, 17.** The rapidly expanding gaseous bubble created by the electric discharge adds even greater force to that already transferred to the liquid by the piston **30** which is instantaneously locked in its forwardmost position so as to confine the space of reaction chamber **11** and is then retracted by an appropriate connecting rod and accelerating mechanism. Since at the instant of electric discharge the reaction chamber **11** is essentially a closed vessel having only a nozzle opening, all of the force will be directed in driving a slug of water through the nozzle opening.

In FIG. **3** there are shown a multiplicity of electrohydraulic jet units **10** arranged serially one above the other on a common "plow" or stand **40.** A suitable number of metal cutting bits or moils **41** are also arranged on the stand **40** in cooperative relationship with the jet units **10.** The stand is mounted on a suitable means such as rails **42** for travel laterally across a mine wall or the like so that the surface thereof is acted on by the electrohydraulic jet units **10** and then the metal cutting bits **41.** Suitable transport means **43,** such as wheels or tracks or the like, suitably powered may be employed to advance the stand **40** in the direction of the mine wall after each pass across the mine face so that the units are repositioned to remove additional material. The rock is fractured by the action of the electrohydraulic jet units **10** and then complete removal is effected by the action of the cutting bits **41.**

Referring to FIG. **4** there are shown a multiplicity of electrohydraulic jet units **10** arranged serially one above the other on a common "plow" or stand **40.** A bank **50** of infrared heating units **51** each having a filament **52** surrounded by a reflector **53** is mounted adjacent the electrohydraulic jet units **10.** In the operation of this embodiment, the stand **40** is advanced toward the mine face by the motive means **43.** The stand **40** travels across the mine face on rails **42.** The rock of the mine face is first heated by the heating units **51** and then the action of the electrohydraulic jet units **10** acts to cool the rock. The resulting thermal shock acts in combination with the force of the electrohydraulic jet units to fracture the rock. Metal cutting bits **41** may also be used after the rock has been fractured effectuate the complete removal of the rock. The arrangement of the electrohydraulic jet units **10** and the heating units **51** can be reversed on the stand **40** so that the liquid used to fracture the rock by the jet units **10** also permeates the rock, is heated by the heating units **51** and expands as it turns to steam and subjects the rock to both thermal shock and fracturing. Again metal cutting bits **41** can be employed to aid in removal of the rock.

FIGS. **5, 6,** and **7** of the drawings illustrate one known form of an electrohydraulic jet unit constructed in accordance with the invention and suitable for use in the overall systems shown in FIGS. **1.** In FIG. **5,** a pair of relatively thick, flat, circular steel plates are shown at **31** and **32** for supporting insulating sleeves **18** and **19** and the opposed central conducting electrodes **16** and **17.** The relatively thick plates **31** and **32** have an inner, or central flat, circular, cavity defining, thick plate **33** sandwiched between them that also is constructed of steel. The plates **31, 32** and **33** are held together in assembled relation by means of a plurality of relatively large, threaded bolts and nuts **34** and **35** arranged around the periphery of the plates and inserted through aligned apertures formed in the plates. The two inner faces of the outer plates **31** and **32** have suitable O-ring grooves formed therein (best shown in FIG. **7**) which coact with coresponding grooves formed in the two faces of the inner steel plate **33** and support O-ringe seals **36** and **38** for sealing closed the space or cavity **39** formed by a central opening in the inner steel plate **33.** The ends of the central electrodes **16** and **17** extend into the central cavity **39.**

As best shown in FIG. **6,** the central steel plate **33** has a small passageway **14** formed therein for supplying liquid to the interior of the cavity **39** as described earlier, and the discharge opening or nozzle **12** is formed approximately **90** arcuate degrees from the discharge opening or nozzle **12** as best shown in FIG. **7.** FIG. **7** is an exploded view of the assembled structure shown in FIGS. **5** and **6** and illustrates in greater detail the construction of each of the outer plates **31** and **32** together with the subtended insulating sleeves **18** and **19** and their central conducting electrodes **16** and **17** as well as the construction of the inner or central cavity defining plate **33.** All of the elements are of heavy thick steel plate construction so as to withstand the extremely high pressures built up during operation of the electrohydraulic jet unit as described earlier in the application.

Although the present invention has been described in connection with the preferred embodiments, it is to be understood that modifications and variations may be resorted to without departing from the spirit and scope of the invention, as those skilled in the art will readily understand. To be particular, while the embodiments of the invention herein disclosed have been described as adapted primarily for use in mining the vertical surfaces of a laterally extending underground mine shaft or tunnel, the invention is in no way restricted to such use but readily may be adapted for use in open pit mining and excavation, drilling, descalling, deicing, use as pneumatic hammer, use in the manner of sand blasting

equipment, and other similar applications as would be obvious to one skilled in the art in the light of the above teachings. Accordingly, any such modifications and variations are considered to be within the purview and scope of the invention as defined by the appended claims.

We claim:

1. Apparatus for removing rock from a mine wall comprising:

a. a stand mounted for travel across the face of the mine wall;

b. electrohydraulic jet means for producing a high energy liquid jet capable of fracturing rock by its impact effect and comprising a chamber for receiving and confining a liquid and having outlet opening nozzle means formed on at least one side thereof and means for discharging electric energy across spaced-apart points through the liquid to create a shock wave in the liquid whereby the liquid emerges as a high energy liquid jet through the outlet opening nozzle means, said electrohydraulic jet means being mounted on the stand for delivering pulsed high energy liquid jets against the face of the mine wall to fracture the surface thereof; and

c. mechanically driven cutting means mounted on the stand adjacent the electrohydraulic jet means for removing the portions of the surface fractured by said electrohydraulic jet means.

2. Apparatus for fracturing rock in a mine wall comprising:

a. a stand mounted for travel across the face of the mine wall;

b. electrohydraulic jet means for producing a high energy liquid jet capable of fracturing rock by its impact effect and comprising a chamber for receiving and confining a liquid and having outlet opening nozzle means formed on at least one side thereof and means for discharging electric energy across spaced-apart points through the liquid to create a shock wave in the liquid whereby the liquid emerges as a high energy liquid jet through the outlet opening nozzle means, said electrohydraulic jet means being mounted on the stand for delivering pulsed high energy liquid jets against the face of the mine wall to fracture the surface thereof; and

c. heating means mounted on the stand adjacent the electrohydraulic jet means for subjecting portions of the mine wall to thermal shock to additionally fracture the rock in the mine wall.

3. Apparatus according to claim **2** wherein the electrohydraulic jet means is mounted on the stand relative to the heating means in a manner such that the liquid jets act on the wall in advance of the heating means.

4. Apparatus according to claim **2** wherein the electrohydraulic jet means is mounted on the stand relative to the heating means in a manner such that the heating means acts on the wall in advance of the liquid jets.

5. Apparatus for removing rock from a mine wall comprising:

a. a stand mounted for travel across the face of the mine wall;

b. electrohydraulic jet means for producing a high energy liquid jet capable of fracturing rock by its impact effect and comprising a chamber for receiving and confining a liquid and having outlet opening nozzle means formed on at least one side thereof and means for discharging electric energy across spaced-apart points through the liquid to create a shock wave in the liquid whereby the liquid emerges as a high energy liquid jet through the outlet opening nozzle means, said electrohydraulic jet means being mounted on the stand for delivering pulsed high energy liquid jets against the face of the mine wall to fracture the surface thereof;

c. heating means mounted on the stand adjacent the electrohydraulic jet means for subjecting portions of the mine wall to thermal shock; and

d. mechanically driven cutting means mounted on the stand adjacent the heating means for removing the portions of the surface fractured by said electrohydraulic jet means and said heating means.

6. Apparatus according to claim **5** wherein the electrohydraulic jet means is mounted on the stand relative to the heating means in a manner such that the liquid jets acts on the wall in advance of the heating means.

7. Apparatus according to claim **5** wherein the electrohydraulic jet means is mounted on the stand relative to the heating means in a manner such that the heating means acts on the wall in advance of the liquid jets.

8. A method of mining with a high energy liquid jet produced with an electrohydraulic chamber having a shaped outlet nozzle and provided with an electric discharge channel, the method comprising:

a. disposing the shaped outlet nozzle opposite a surface to be mined;

b. supplying a relatively incompressible liquid to the chamber;

c. confining the liquid within the chamber;

d. discharging electric energy across the electric discharge channel through the liquid to create a shock wave in the liquid; and

e. directing at least a portion of the liquid directionally through the shaped outlet nozzle under action of the shock wave whereby the liquid emerges as a high energy liquid jet and acts on the surface being mined.

9. The process of claim **8**, including

f. applying mechanical force to the liquid to increase the energy level of the liquid prior to the discharge of electrical energy therein.

10. The process of claim **8**, including

f. subjecting the surface being mined to the action of mechanical cutting means.

11. The process of claim **8**, including

f. subjecting the surface being mined to a source of heat whereby thermal shock is created in said surface.

12. The process of claim **8**, including

f. subjecting the surface being mined to a source of heat whereby thermal shock is created in said surface; and

g. subjecting the surface being mined to the action of mechanical cutting means.

* * * * *