PCT WORLD INTELLECTUAL PROPERTY ORGANIZATION
International Bureau

INTERNATIONAL APPLICATION PUBLISHED UNDER THE PATENT COOPERATION TREATY (PCT)

(51) International Patent Classification 4 :		(11) International Publication Number:
E06C 7/18, A62C 1/14	A1	WO 87/ 05072
		(43) International Publication Date: 27 August 1987 (27.08.87)

(21) International Application Number: PCT/NO87/00013

(22) International Filing Date: 13 February 1987 (13.02.87)

(31) Priority Application Number: 860544

(32) Priority Date: 14 February 1986 (14.02.86)

(33) Priority Country: NO

(71)(72) Applicant and Inventor: HEKTOEN, Hans, Petter [NO/NO]; Hesselbergs gate 8, N-0555 Oslo 5 (NO).

(74) Agent: TANDBERGS PATENTKONTOR A-S; Postboks 7085 H, N-0306 Oslo 3 (NO).

(81) Designated States: AT (European patent), BE (European patent), CH (European patent), DE (European patent), DK, FI, FR (European patent), GB (European patent), IT (European patent), LU (European patent), NL (European patent), SE (European patent), US.

Published
With international search report.
In English translation (filed in Norwegian).

(54) Title: FALL SECURING DEVICE

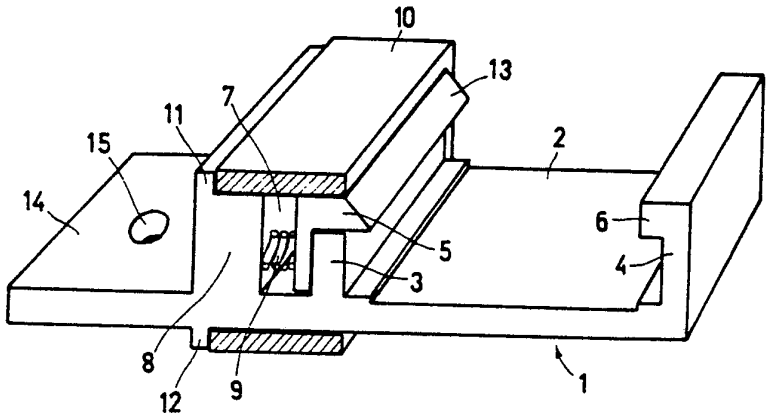

(57) Abstract

A fall securing device for mounting on an essentially vertical guide rail having oppositely directed guide flanges comprises a sliding body (1) having a pair of hook members (5, 6) projecting towards each other from opposite side walls (3, 4) of the sliding body (1) to grip the guide flanges of the rail, and a laterally projecting arm (14) for attachment of a harness or the like, so that traction from the harness in the longitudinal direction of the rail causes a turning of the sliding body (1) relative to the rail and therewith a braking frictional force between the rail and the side walls of the sliding body. One (5) of the hook members (5, 6) of the sliding body (1) is a separate member which is displaceably mounted in a recess (7) in the side wall (3) of the sliding body (1) nearest the projecting arm (14), the displaceable hook member (5), in a manner known per se, being spring-loaded (9) in the direction towards the other hook member (6) and having an outwards-facing bevelled surface portion (13) which, when bearing against the associated guide flange (24) of the rail (23) when mounting the sliding body (1) on the rail (23), causes a displacement of the hook member to enable automatic insertion of the rail (23) between the hook members (5, 6).

FOR THE PURPOSES OF INFORMATION ONLY

Codes used to identify States party to the PCT on the front pages of pamphlets publishing international applications under the PCT.

AT	Austria	**FR**	France	**ML**	Mali
AU	Australia	**GA**	Gabon	**MR**	Mauritania
BB	Barbados	**GB**	United Kingdom	**MW**	Malawi
BE	Belgium	**HU**	Hungary	**NL**	Netherlands
BG	Bulgaria	**IT**	Italy	**NO**	Norway
BJ	Benin	**JP**	Japan	**RO**	Romania
BR	Brazil	**KP**	Democratic People's Republic of Korea	**SD**	Sudan
CF	Central African Republic			**SE**	Sweden
CG	Congo	**KR**	Republic of Korea	**SN**	Senegal
CH	Switzerland	**LI**	Liechtenstein	**SU**	Soviet Union
CM	Cameroon	**LK**	Sri Lanka	**TD**	Chad
DE	Germany, Federal Republic of	**LU**	Luxembourg	**TG**	Togo
DK	Denmark	**MC**	Monaco	**US**	United States of America
FI	Finland	**MG**	Madagascar		

Fall securing device

The invention relates to a fall securing device for mounting on an essentially vertical guide rail having oppositely directed, longitudinally extending guide flanges, comprising a sliding body having a pair of hook members projecting towards each other from opposite side walls of the sliding body to grip the guide flanges of the rail, and a laterally projecting arm for attachment of a harness or the like, so that traction from the harness in the longitudinal direction of the rail causes a turning of the sliding body relative to the rail and therewith a braking frictional force between the rail and the side walls of the sliding body.

Such a fall securing or safety locking device in particular is intended for mounting on vertical escape paths in the form of fire ladders or the like, wherein the guide rail is arranged as, for example, a part of one of the side stringers of the fire ladder.

In connection with a known ladder having such a guide rail there is known a fall securing device of the stated type wherein the sliding body is attached to the guide rail by means of a suitable opening in one of the guide flanges. The known ladder is of the folding type and comprises continuous sections extending consecutively along the stories of the building where the ladder is mounted. For each story a mounting opening is provided in the guide rail and has a width corresponding to the width of the associated sliding body. Each opening is narrower than the opening for the superjacent story, so that the sliding bodies for all stories will slide over the subjacent openings of the guide rail without being able to loosen through these openings. However, in a situation of panic it may be difficult to find the opening in the guide rail, and also difficult to mount the sliding body for a person without any technical knowledge, so that the known device is unsatisfactory from a safety point of view.

The object of the invention is to provide a fall securing device which is easy to operate, which has a safe func-

tion and which requires an insignificant physical force for mounting, at the same time as it is simple and cheap to manufacture.

The above-mentioned object is achieved with a safety device of the introductorily stated type which, according to the invention, is characterized by the characterizing features stated in the claims.

The invention will be further described below in connection with an exemplary embodiment with reference to the drawing, wherein

Fig. 1 shows a perspective view of a safety device according to the invention, and

Fig. 2 shows a cross-section of a ladder having a safety device according to Fig. 1 mounted thereon.

As shown in Fig. 1, the safety device includes a sliding body generally designated by the reference numeral 1, which sliding body comprises an essentially channel-shaped piece of material having a web member 2 and side wall members 3, 4 from which a pair of hook members 5 and 6 project inwards and are intended to grip oppositely directed guide flanges on a guide rail (see Fig. 2). The hook member 6 is an integral part of the side wall member 4, whereas the hook member 5 is a separate member which is displaceably mounted in the sliding body 1, so that it can be moved against a spring load in the direction away from the fixed hook member 6. In the illustrated embodiment, the hook member 5 has an essentially L-shaped cross-section and is placed in a laterally and towards the channel member open cavity in the form of a chute 7 in a hook-receiving portion 8 of the sliding body. A spring means in the form of e.g. a leaf spring or a helical spring 9 (shown schematically in Fig. 1) is placed between the hook member 5 and the opposite side wall of the chute 7.

The hook member 5 is prevented from falling out of the chute 7 by means of a sleeve 10 (shown sectioned in the drawing) surrounding the sliding body and the hook member. In the illustrated embodiment the sliding body 1 consists of a cut length of an extruded piece of material which is

adapted to receive a suitably dimensioned sleeve 10 in the form of a bit of a square tube. This represents a structure which is very simple and cheap to manufacture. The sleeve 10 is fixed in a suitable manner to the sliding body 1, e.g. in that the sleeve by means of a suitable tool is locally pressed into the sliding body. To ensure a correct placing of the sleeve on the sliding body, this is provided as shown with a pair of oppositely directed ribs 11, 12 for abutment against end portions of the sleeve.

The displaceable hook member 5 has an outwards facing, bevelled surface portion 13 which, when mounting the sliding body on the associated guide rail, is brought into abutment against and forced against the associated guide flange on the guide rail, so that the hook member is pushed aside and enables introduction of the guide flange.

The sliding body 1 also includes an arm 14 projecting laterally from the sliding body on the opposite side of the hook-member receiving portion 8 in relation to the channel portion 2, 3, 4. The arm 14 is provided with a hole 15 for attachment of a harness or the like which can be attached to the person which is to use the fall securing device in connection with the circumstance that the person is to descend a ladder with associated guide rail for the safety device (see Fig. 2). As the person descends the ladder, the sliding body will fall downwards by itself, the channel member sliding along the guide rail with a suitable, small friction. If, however, the person in question should fall down from the ladder, downwards directed traction from the harness will cause a turning of the sliding body in relation to the rail, as a result of the fact that the fixing point (the hole 15) of the harness is arranged sideways in relation to the channel member. Thereby an effective braking frictional force is achieved between the guide flanges of the guide rail and diagonally opposite corner portions of the inner side surfaces of the side wall members 3, 4.

In Fig. 2 the safety device is shown to be mounted on a ladder 16 which is of the folding type and includes a number of fastening brackets 17, an inner stringer 18,

an outer stringer 19 and a number of rungs 20 which are pivotally mounted between the stringers by means of bolts 21, 22. The outer stringer 19 is formed with a guide rail 23 with oppositely directed guide flanges 24, 25.

When mounting the safety device, the hook member 6 of the sliding body 1 is initially hooked onto the guide flange 25. Thereafter the displaceable hook member 5 is knocked or forced against the opposite guide flange 24 of the rail, so that the hook member is displaced laterally and the rail is inserted into and retained in the sliding body. As it will be understood, the arm 14 forms a moment arm, so that, with a suitable length of the arm 14, a minimum physical force is required to place or mount the sliding body on the rail. Further, it is clear that the sliding body by means of the moveable hook member can be mounted at any place on the rail, so that safe, simple and quick mounting is ensured.

Patent claims

1. A fall securing device for mounting on an essentially vertical guide rail (23) having oppositely directed, longitudinally extending guide flanges (24, 25), comprising a sliding body (1) having a pair of hook members (5, 6) projecting towards each other from opposite side walls (3, 4) of the sliding body (1) to grip the guide flanges (24, 25) of the rail (23), and a laterally projecting arm (14) for attachment of a harness or the like, so that traction from the harness in the longitudinal direction of the rail causes a turning of the sliding body (1) relative to the rail (23) and therewith a braking frictional force between the rail and the side walls of the sliding body, CHARACTERIZED IN that one of the hook members (5, 6) is a separate member (5) which is displaceably mounted in a recess (7) in the side wall (3) of the sliding body (1) nearest the projecting arm (14), the displaceable hook member (5), in a manner known per se, being spring-loaded (9) in the direction towards the other hook member (6) and having an outwards-facing bevelled surface portion (13) which, when bearing against the associated guide flange (24) of the rail (23) when mounting the sliding body (1) on the rail (23), causes a displacement of the hook member to enable automatic insertion of the rail (23) between the hook members (5, 6).

2. A fall securing device according to claim 1, CHARACTERIZED IN that the recess (7) is a laterally open, transversly extending chute having an essentially L-shaped cross-sectional outline, and the displaceable hook member (5) has an essentially corresponding cross-sectional shape and is retained in the chute (7) by means of a sleeve (10) enclosing the sliding body (1) and the hook member (5).

3. A fall securing device according to claim 2, CHARACTERIZED IN that the sliding body (1) consists of a cut length of an extruded, essentially channel-shaped piece of material which is adapted to receive said sleeve (10) in the form of a cut length of a square tube.

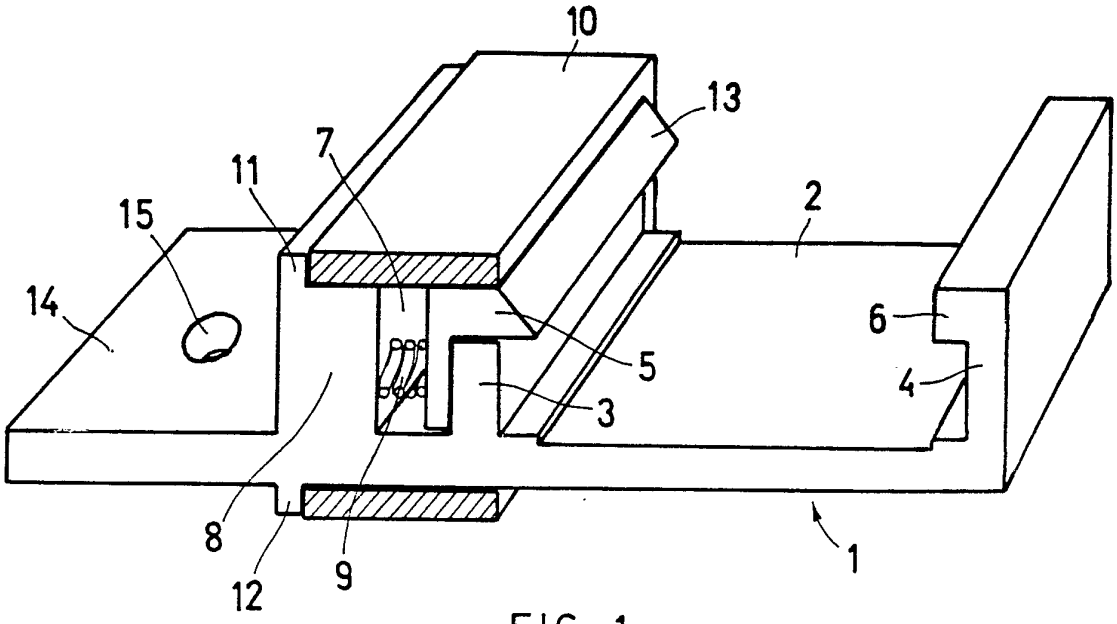

FIG. 1

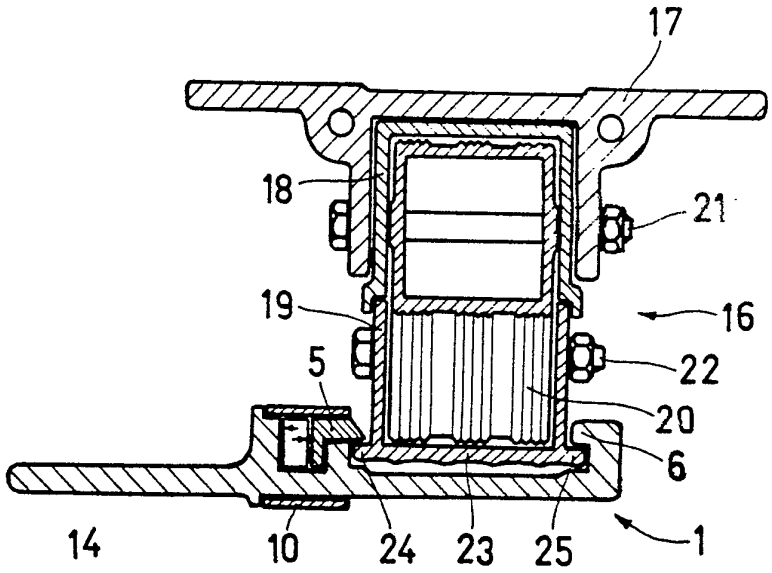

FIG. 2

INTERNATIONAL SEARCH REPORT

International Application No PCT/NO87/00013

I. CLASSIFICATION OF SUBJECT MATTER (if several classification symbols apply, indicate all) [6]

According to International Patent Classification (IPC) or to both National Classification and IPC 4

E 06 C 7/18, A 62 C 1/14

II. FIELDS SEARCHED

Minimum Documentation Searched [7]

Classification System	Classification Symbols
IPC 4	A 62 C 1/00, /14; E 06 C 7/00, /18
US Cl	182: 8, 9, 133

Documentation Searched other than Minimum Documentation to the Extent that such Documents are Included in the Fields Searched [8]

SE, NO, DK, FI classes as above

III. DOCUMENTS CONSIDERED TO BE RELEVANT [9]

Category [10]	Citation of Document, [11] with indication, where appropriate, of the relevant passages [12]	Relevant to Claim No. [13]
A	US, A, 4 130 177 (J E PANDOLPH) 19 December 1978	
A	US, A, 3 410 364 (C D FOUNTAIN) 12 November 1968	
A	US, A, 3 523 591 (C D FOUNTAIN) 11 August 1970	

* Special categories of cited documents: [10]

"A" document defining the general state of the art which is not considered to be of particular relevance

"E" earlier document but published on or after the international filing date

"L" document which may throw doubts on priority claim(s) or which is cited to establish the publication date of another citation or other special reason (as specified)

"O" document referring to an oral disclosure, use, exhibition or other means

"P" document published prior to the international filing date but later than the priority date claimed

"T" later document published after the international filing date or priority date and not in conflict with the application but cited to understand the principle or theory underlying the invention

"X" document of particular relevance; the claimed invention cannot be considered novel or cannot be considered to involve an inventive step

"Y" document of particular relevance; the claimed invention cannot be considered to involve an inventive step when the document is combined with one or more other such documents, such combination being obvious to a person skilled in the art.

"&" document member of the same patent family

IV. CERTIFICATION

Date of the Actual Completion of the International Search	Date of Mailing of this International Search Report
1987-05-14	1987 -05- 15
International Searching Authority	**Signature of Authorized Officer**
Swedish Patent Office	Eva-Brita Andersson