J. P. GERMAN & A. O. POOL.

SUSPENSION SUPPORT FOR ELECTRIC LAMPS.

APPLICATION FILED FEB. 8, 1913.

1,068,998. Patented July 29, 1913.

Fig. 1.

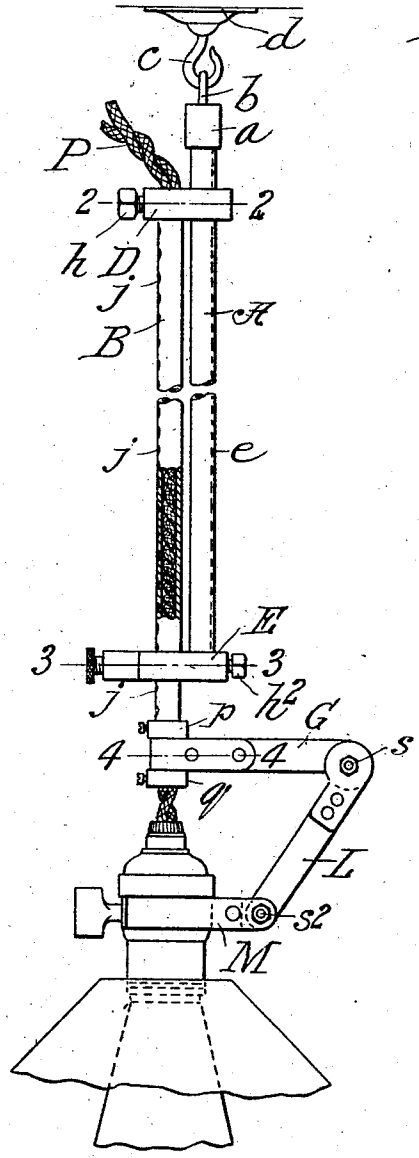

Fig. 5.

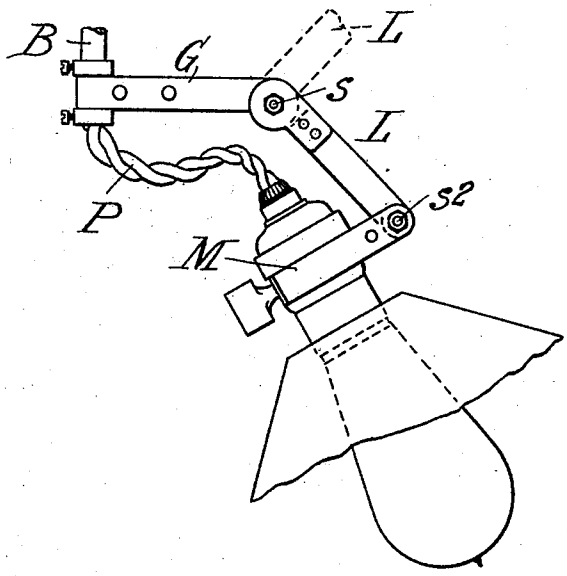

Fig. 2.

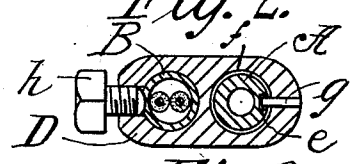

Fig. 3.

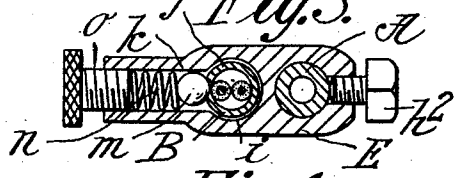

Fig. 4.

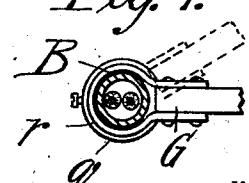

WITNESSES:

H. L. Sprague

W. P. Noble.

INVENTORS,
John P. German and
Aaron O. Pool,
BY
Wm. S. Bellows
ATTORNEY.

COLUMBIA PLANOGRAPH CO., WASHINGTON, D. C.

UNITED STATES PATENT OFFICE.

JOHN P. GERMAN AND AARON O. POOL, OF SPRINGFIELD, MASSACHUSETTS.

SUSPENSION-SUPPORT FOR ELECTRIC LAMPS.

1,068,998. Specification of Letters Patent. Patented July 29, 1913.

Application filed February 8, 1913. Serial No. 747,069.

To all whom it may concern:

Be it known that we, JOHN P. GERMAN and AARON O. POOL, a subject of the Queen of the Netherlands and a citizen of the United States of America, respectively, both residents of Springfield, in the county of Hampden and State of Massachusetts, have invented certain new and useful Improvements in Suspension-Supports for Electric Lamps, of which the following is a full, clear, and exact description.

This invention relates to an adjustable suspension support for an incandescent electric lamp, more especially available in machine shops and factories, which has the capability of supporting the lamp at any desired distance below the top of a room and also at points more or less radially removed from the normal line of suspension.

An object of the invention is to improve the means for holding the extension members of the support in their parallel relations, for preventing them from having revoluble movements one relatively to the other and to retain the extension or movable member in any position either high, low or intermediate, in which the same may be set.

Another object is to provide in the device an improved adjustable support for a lamp socket holder by reason of which the utility of the device is greatly increased. And an object of the invention, furthermore, is to so construct the suspension support and its appurtenances that the same shall be practicable and inexpensive of manufacture, durable and capable of use for an indefinite time without liability of derangement or need of repair.

The invention is described in conjunction with the accompanying drawings and is set forth in the claims.

In the drawings: Figure 1 is a side elevation of the suspension support. Figs. 2, 3 and 4 are horizontal cross sectional views in detail as taken respectively on lines 2—2, 3—3, and 4—4, of Fig. 1. Fig. 5 is a side elevation of the lower portion of the device indicating one of many changed positions for the lamp.

Similar characters of reference indicate corresponding parts in all of the views.

Included in the suspension support are two vertical members, A and B, the one B being essentially a tube open from end to end while the member A, which is herein termed a rod, may be of tubular form for lightness. The rod A has a head piece *a* provided with an eye *b* for suspension engagement in the depending hook *c* of a ceiling plate *d*. The rod A has a longitudinal spline groove *e* extending along its side for substantially its entire length. The tube B has at its upper end rigidly secured thereto a member D which is made with a circular hole *f* in its portion that is offset from the tube and such apertured portion has an embracing relation to the rod A so that the tube and its member D may be slid along and in parallelism with the rod. The said member D opposite the spline groove has a pin *g* inserted with a tight driving fit in a transverse hole therefor in the member D, the inner extremity of such pin entering the spline groove *e* and serving as a key to prevent revoluble movement of the tube relatively to the rod.

The rod at its lower end has a member E somewhat similar to the one D rigidly secured thereto (the set screws *h* and h^2 serving for the confinements); and said member E at its portion offset from the rod is constructed with a vertical hole *i* therethrough whereby the tube may freely slide through this latter mentioned apertured portion.

The tube at its side opposite from the rod has a series of depressions *j* arranged in the vertical longitudinal line of the rod; and the portion of the member E farthest offset from the rod is horizontally drilled to form a bore or cavity *k* in which is fitted an engagement piece *m*, preferably a steel ball the same being yieldingly pressed by the spring *n* in such bore and having an abutment against the inner end of the screw plug *o* which serves both to close the bore and to vary the tension of the spring. The tube at its lower end portion has a pair of spaced collars *p* and *q;* and G represents a radial and horizontally disposed arm made with an annular end portion *r* which has an encircling engagement about the tube and which is engaged between said collars. Thus the arm G is revoluble entirely around the lower end of the tube, and is held against displacement in the line of the tube axis. To the outer end of the tube a link L is pivoted; and to the extremity of the link a clamp or yoke M which constitutes a holder for the socket of an incandescent lamp is pivoted.

The pivot joints *s*, s^2, for the link are constituted by screws engaged by nuts so

that the joints are frictioned or tensioned whereby the lamp socket holder will remain in any position of adjustment to which it may be swung relatively to the link and so that the link will remain in any position of adjustment to which it may be swung relatively to the horizontal revoluble arm.

The electric lamp cable P provided sufficiently slack above the upper end of the tube, passes down through the tube to its connection with the socket of the electric lamp. When the lamp is in disuse, the tube will be slid to its uppermost position so that it is out of the way and practically opposite the rod; but, of course, the tube may be slid downwardly in any extent desired to place the lamp in a position, as to height, of greatest advantage. In the vertical movements of the tube, the spring pressed ball clicks past the successive depressions and then remains in some one of such depressions, serving as a detent for the retention of the tube in its given set position.

As shown in Fig. 1, the lamp socket holder is arranged horizontally so that the axes of the lamp socket and the tube are coincident, the jointed link L having an oblique position. The link may be swung to a position, for instance, as represented in the full lines in Fig. 5, whereby the lamp is bodily carried offside from the tube axis; again, for instance, the link may be swung to an upward inclination, as represented by the dotted lines in Fig. 5, whereby the lamp may be upwardly directed while offside from the support, and by the revolubility of the arm G, the lamp offside from the support either upwardly or downwardly directed, or axially or on any oblique line, may be swung around to any point to the front, rearward or to the rightward or leftward of the support. And, moreover, the depending hook of the ceiling plate, in one plane, and the eye member at the top of the rod in a plane right angular to that of the hook, form in substance a universal joint so that the suspension support with the lamp may be swung in any direction from the point of suspension to carry the lamp far offside from the normal suspension line.

We claim:—

1. A rod, having a longitudinal spline groove therein, and means for the suspension of same, a tube arranged alongside of said rod having a member rigidly carried thereby which has an embracing relation to said rod, and is provided with a projection engaging in said spline groove, and said rod having a member rigidly secured thereto and having an embracing relation about said tube, said parts being constructed so that the tube carried member is slidable along the rod and the rod carried member is slidable along the tube, the tube having at its lower portion a radial and horizontal arm revolubly connected thereto, a link pivoted to the arm and a lamp-socket holder pivoted to the link.

2. A rod, and means for the suspension of same, a tube, arranged alongside of said rod, having a series of spaced depressions in its side, and having a member rigidly carried thereby which has an embracing relation to said rod, and said rod having a member rigidly secured thereto and having an embracing relation about said tube, which member in its tube embracing portion has a cavity therein, with a spring pressed piece in said cavity adapted to engage in said depressions in the tube, a radial and horizontal arm revolubly connected to the lower portion of the tube, a link pivoted to the arm, and a lamp-socket holder pivotally jointed to the link.

3. A rod, having a longitudinal spline groove therein, and means for the suspension of same, a tube, arranged alongside of said rod, having a series of spaced depressions in its side, and having a member rigidly carried thereby which has an embracing relation to said rod, and is provided with a projection engaging in said spline groove, and said rod having a member rigidly secured thereto and having an embracing relation about said tube, which member in its tube embracing portion has a cavity therein, with a spring pressed piece in said cavity adapted to engage in said depressions in the tube, a radial and horizontal arm revolubly connected to the lower portion of the tube, a link pivoted to the arm, and a lamp socket holder pivotally jointed to the link.

Signed by us at Springfield, Mass., in presence of two subscribing witnesses.

JOHN P. GERMAN.
AARON O. POOL.

Witnesses:
G. R. DRISCOLL,
B. A. SEAVER.

Copies of this patent may be obtained for five cents each, by addressing the "Commissioner of Patents, Washington, D. C."