US00D577168S

(12) United States Design Patent
Leppky

(10) Patent No.: US D577,168 S
(45) Date of Patent: ** *Sep. 16, 2008

(54) **BAILING BUCKET**

(76) Inventor: **Luke Leppky**, P.O. Box 686, Boyle, Alberta (CA) TOA 0M0

(*) Notice: This patent is subject to a terminal disclaimer.

(**) Term: **14 Years**

(21) Appl. No.: **29/248,000**

(22) Filed: **Jul. 25, 2006**

(51) **LOC (8) Cl.** **07-07**
(52) **U.S. Cl.** **D32/53**; D32/53.1
(58) **Field of Classification Search** D32/53–53.1, D32/1; D34/28, 1; 15/157.1–157.9; 220/908, 220/694, 697, 699–701, 770–774; 294/152; 141/108–109; D30/162
See application file for complete search history.

(56) **References Cited**

U.S. PATENT DOCUMENTS

1,656,799	A	1/1928	Smith	
3,994,522	A	11/1976	Hinshaw	
D254,286	S	2/1980	Daniel	
D289,452	S	4/1987	Fuller	
4,693,504	A *	9/1987	Baker	294/1.1
4,809,390	A *	3/1989	Jackson et al.	15/257.9
D305,467	S	1/1990	Dagge	
D324,118	S	2/1992	Martin	
5,088,531	A	2/1992	Wade	
D353,241	S	12/1994	Breen	
D361,183	S *	8/1995	Pilney	D32/53
D392,983	S *	3/1998	Watts	D15/32
6,062,415	A	5/2000	Harper	
6,233,781	B1	5/2001	Savage	
6,308,379	B1	10/2001	Hendrickson et al.	
6,398,278	B1	6/2002	Orr	
D462,902	S	9/2002	Gittins et al.	
6,874,797	B2 *	4/2005	Gardenour	280/47.131
D513,352	S *	12/2005	Weathers et al.	D34/5
6,983,965	B1 *	1/2006	Bergell	294/1.1

* cited by examiner

Primary Examiner—Pamela J. Burgess
(74) *Attorney, Agent, or Firm*—Bay Area Patent Group, LLC

(57) **CLAIM**

The ornamental design for a bailing bucket, as shown and described.

DESCRIPTION

FIG. **1** is a front elevation view of the bailing bucket in accordance with my invention;

FIG. **2** is a back elevation view of FIG. **1**;

FIG. **3** is a first side elevation view of FIG. **1**; the second side elevational view being a mirror image thereof;

FIG. **4** is a top plan view of FIG. **1**;

FIG. **5** is a bottom plan view of FIG. **1**;

FIG. **6** is a perspective view of the bailing bucket of FIG. **1**; and,

FIG. **7** is a cross-sectional view taken along line **7**—**7** in FIG. **6**.

The broken lines in the Figures are for illustrative purposes only and form no part of the claimed design.

1 Claim, 5 Drawing Sheets

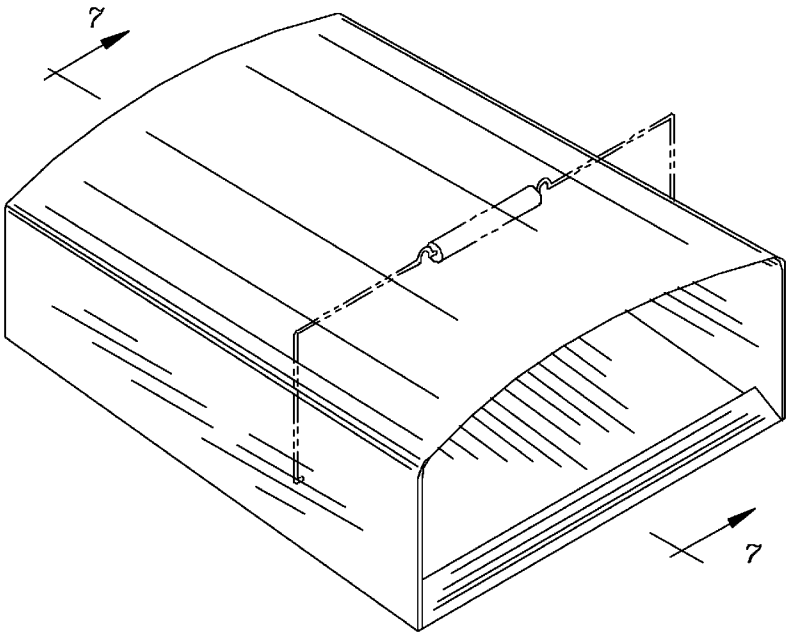

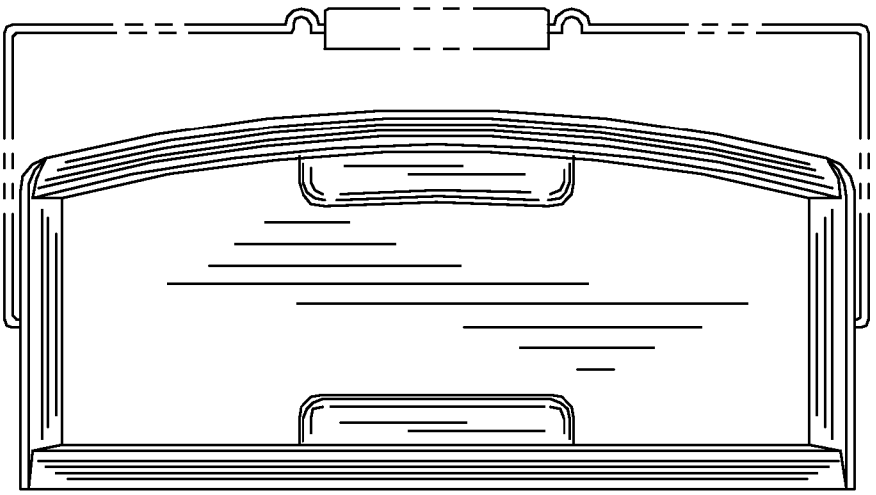

FIG. 1

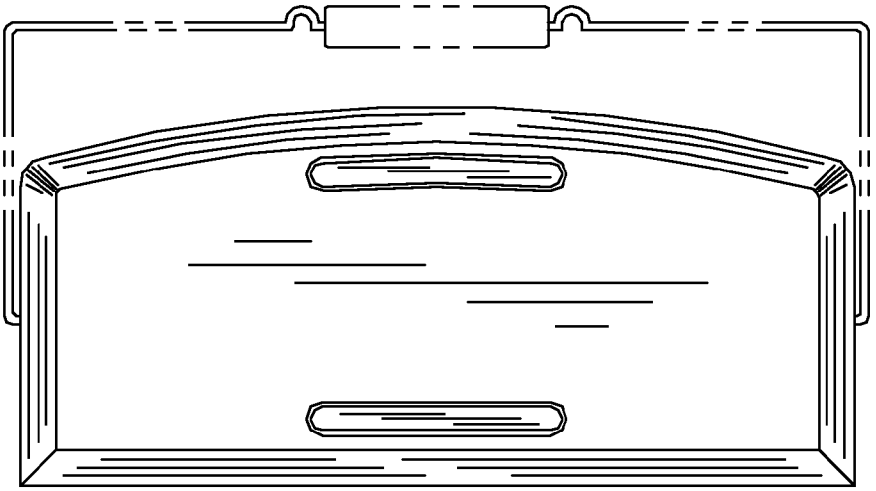

FIG. 2

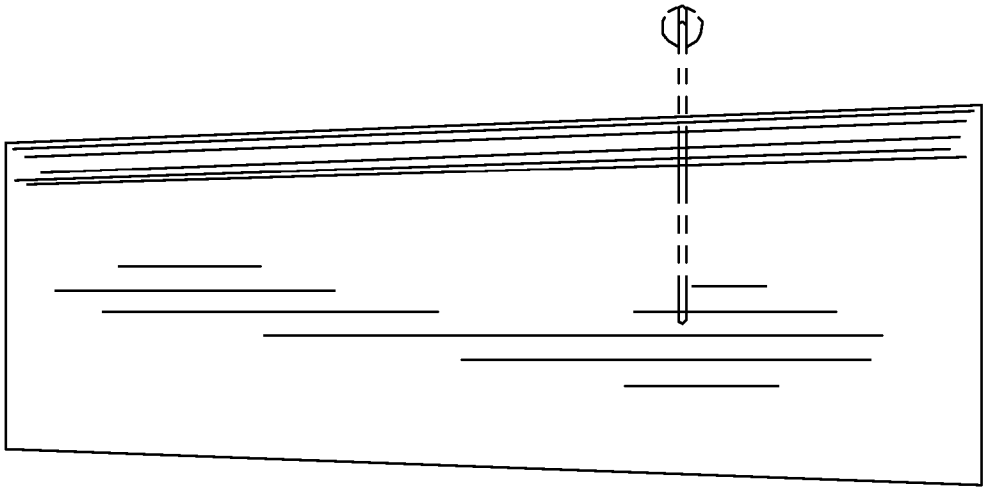

FIG. 3

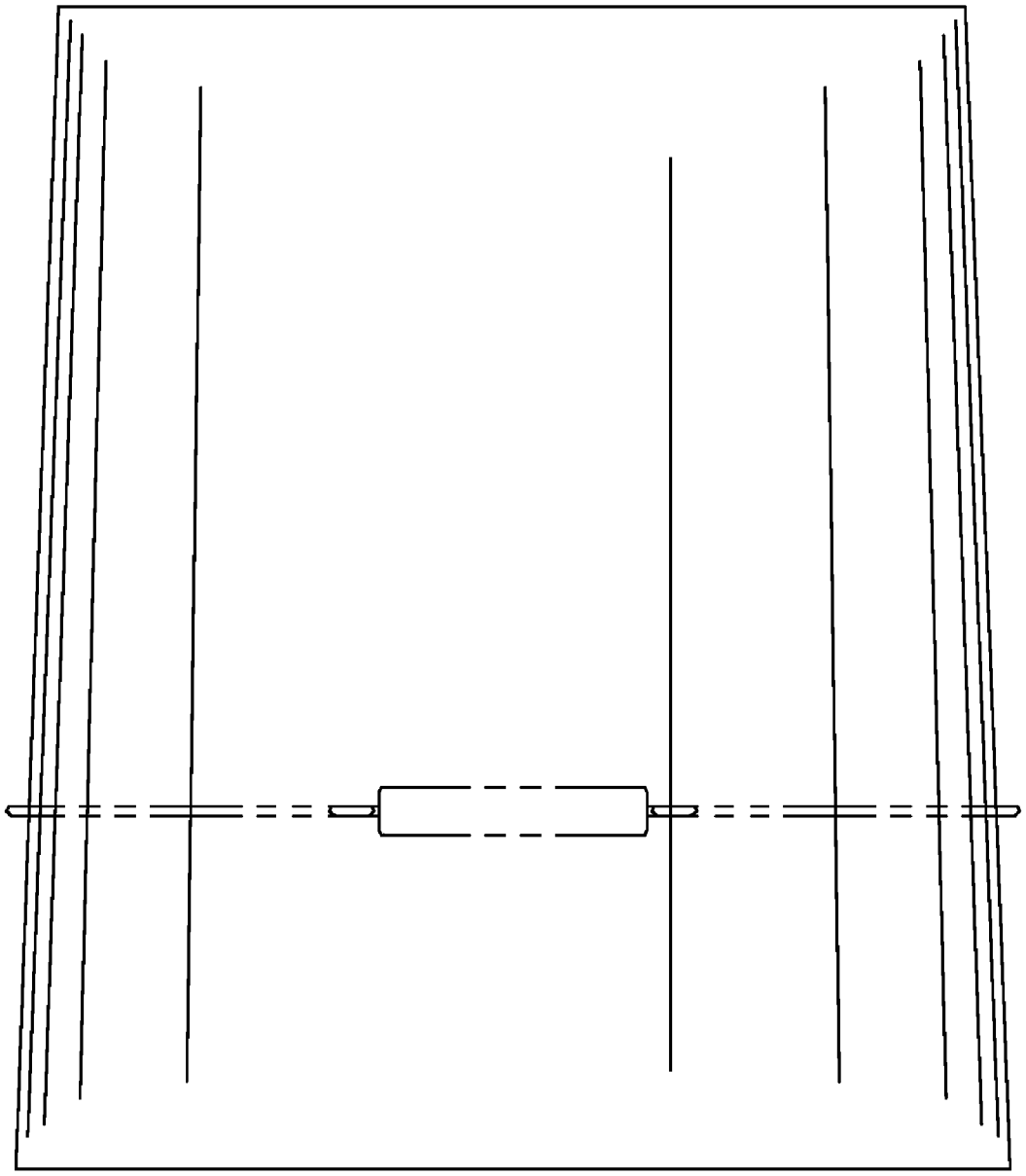

FIG. 4

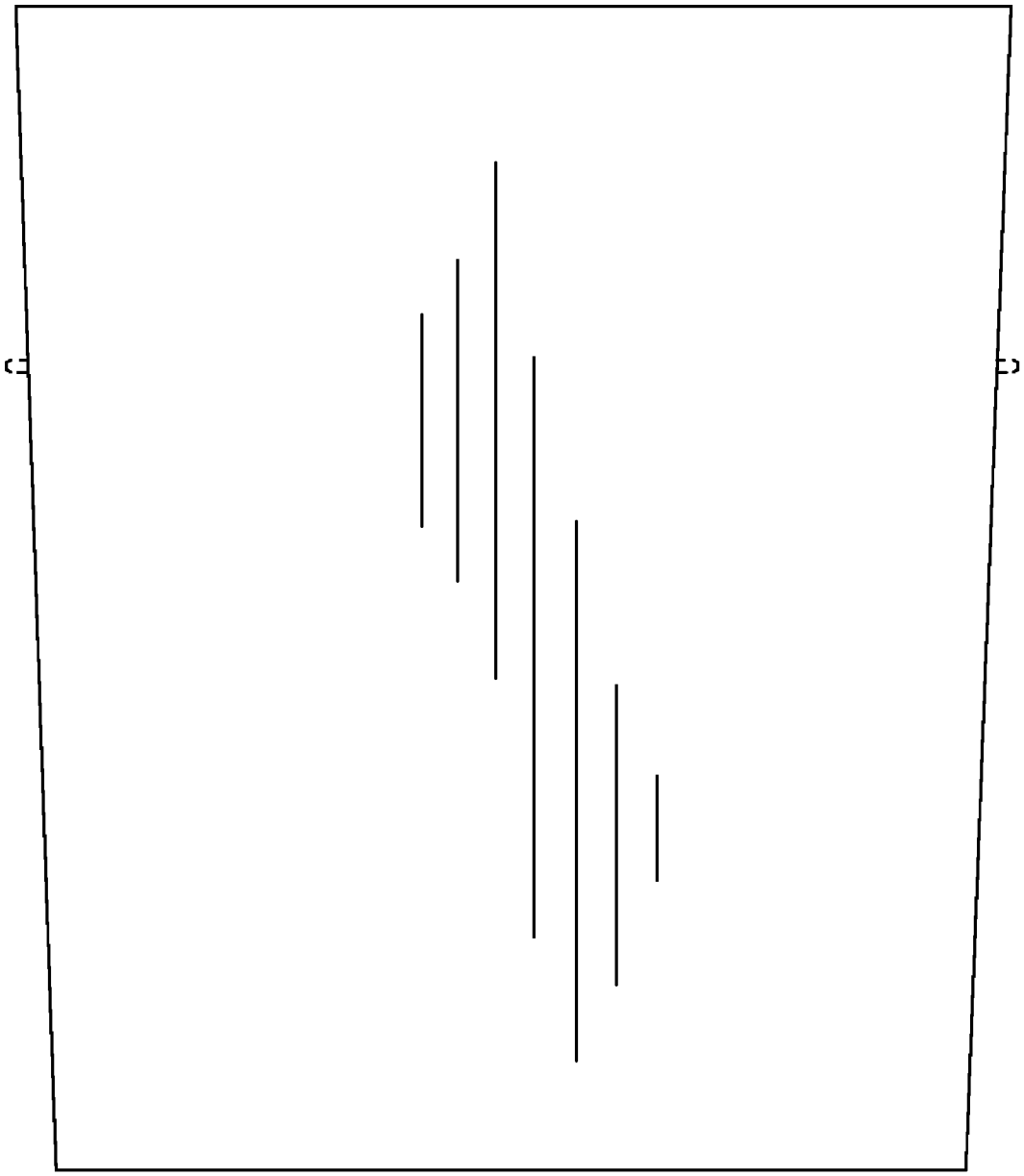

FIG. 5

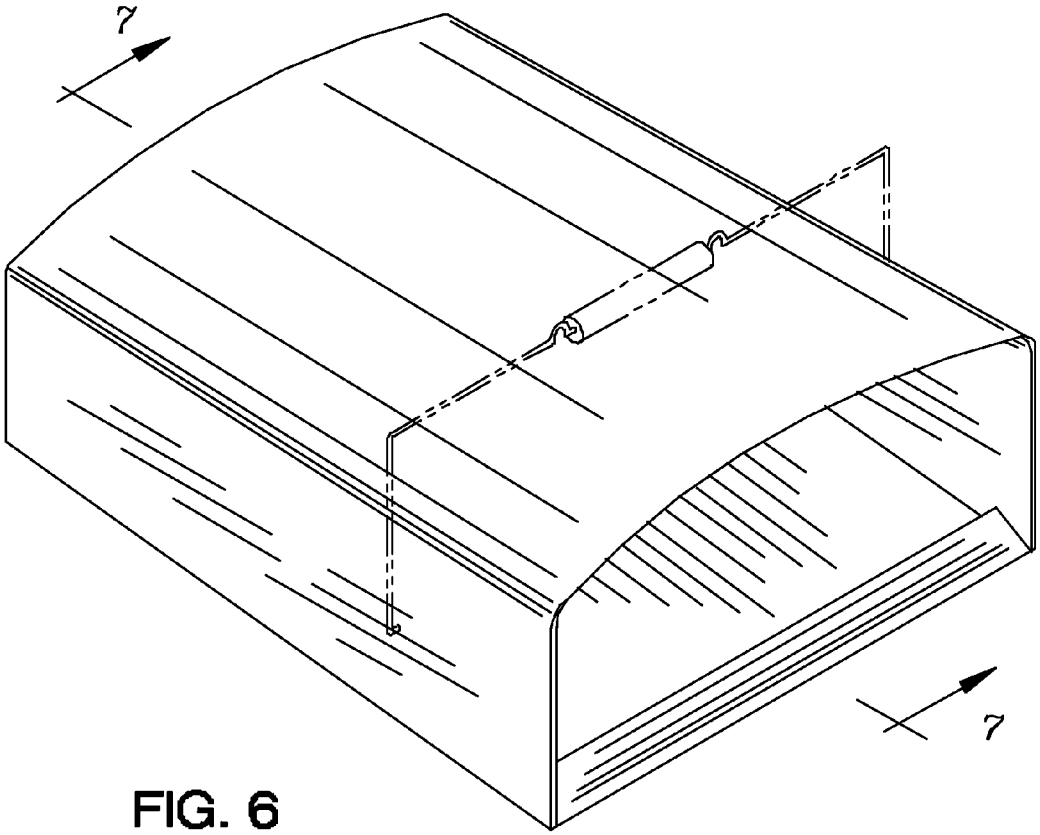

FIG. 6

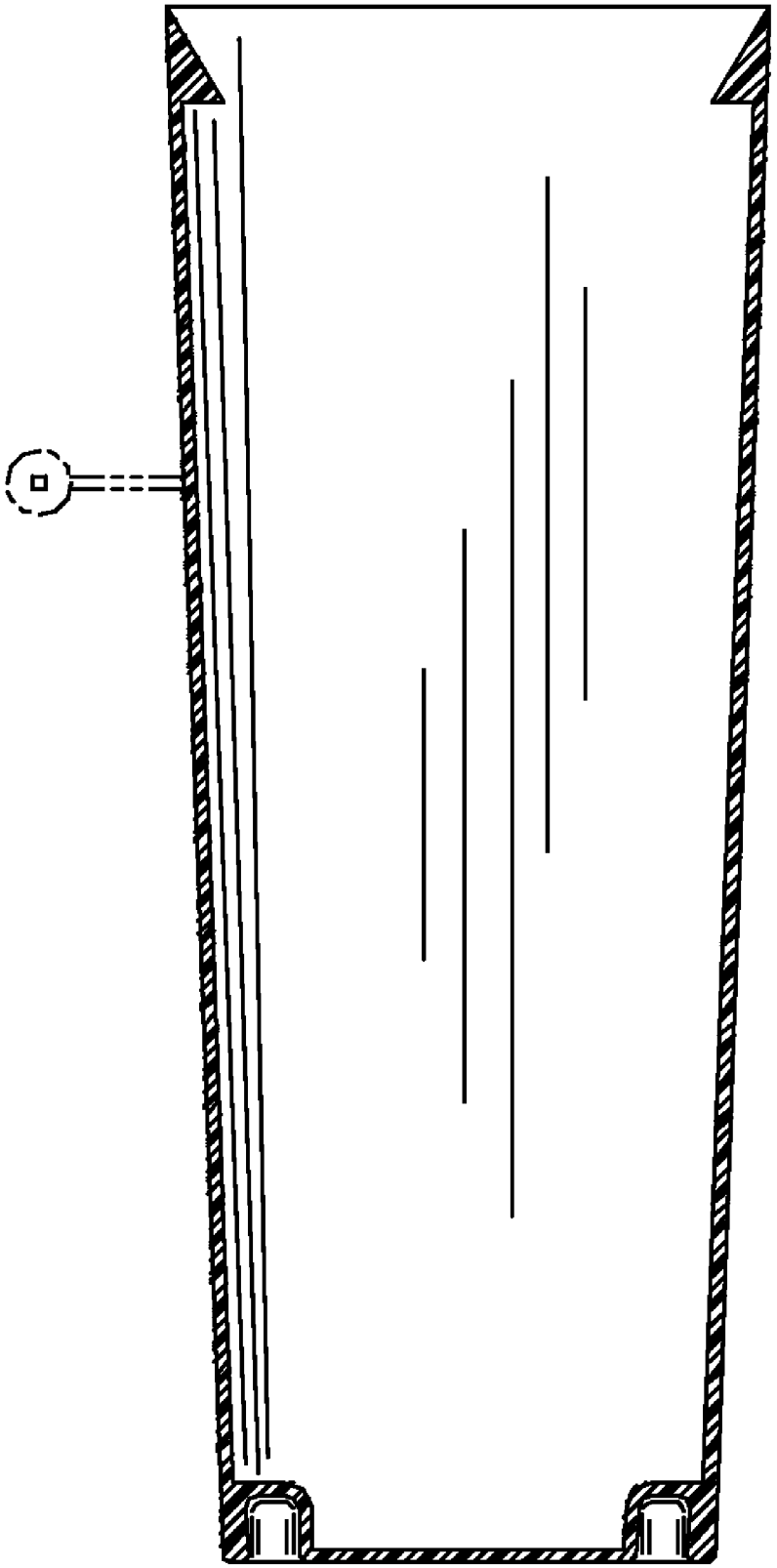

FIG. 7