(12) INTERNATIONAL APPLICATION PUBLISHED UNDER THE PATENT COOPERATION TREATY (PCT)

(19) World Intellectual Property Organization
International Bureau

(43) International Publication Date
26 November 2015 (26.11.2015)

WIPO | PCT

(10) International Publication Number
WO 2015/179821 Al

(51) International Patent Classification:
H04W 72/04 (2009.01) *H04W 24/08* (2009.01)

(21) International Application Number:
PCT/US20 15/032272

(22) International Filing Date:
22 May 2015 (22.05.2015)

(25) Filing Language: English

(26) Publication Language: English

(30) Priority Data:
62/002,041 22 May 2014 (22.05.2014) US
62/002,037 22 May 2014 (22.05.2014) US

(71) Applicant: KYOCERA CORPORATION [JP/JP]; 6 Takeda Tobadono-cho, Fushimi-ku, Kyoto, 612-8501 (JP).

(72) Inventors; and
(71) Applicants : KALHAN, Amit [US/US]; c/o Kyocera International, Inc., Attention: Intellectual Property Department, 861 1 Balboa Ave., San Diego, CA 92 123-1580 (US). CHANG, Henry [US/US]; c/o Kyocera International, Inc., Attention: Intellectual Property Department, 861 1 Balboa Ave., San Diego, CA 92123-1580 (US).

(74) Agent: CONNELL, Kathleen, L.; Kyocera International, Inc., Attention: Intellectual Property Department, 861 1 Balboa Ave., San Diego, CA 92123-1580 (US).

(81) Designated States *(unless otherwise indicated, for every kind of national protection available):* AE, AG, AL, AM, AO, AT, AU, AZ, BA, BB, BG, BH, BN, BR, BW, BY, BZ, CA, CH, CL, CN, CO, CR, CU, CZ, DE, DK, DM, DO, DZ, EC, EE, EG, ES, FI, GB, GD, GE, GH, GM, GT, HN, HR, HU, ID, IL, IN, IR, IS, JP, KE, KG, KN, KP, KR, KZ, LA, LC, LK, LR, LS, LU, LY, MA, MD, ME, MG, MK, MN, MW, MX, MY, MZ, NA, NG, NI, NO, NZ, OM, PA, PE, PG, PH, PL, PT, QA, RO, RS, RU, RW, SA, SC, SD, SE, SG, SK, SL, SM, ST, SV, SY, TH, TJ, TM, TN, TR, TT, TZ, UA, UG, US, UZ, VC, VN, ZA, ZM, ZW.

(84) Designated States *(unless otherwise indicated, for every kind of regional protection available):* ARIPO (BW, GH, GM, KE, LR, LS, MW, MZ, NA, RW, SD, SL, ST, SZ, TZ, UG, ZM, ZW), Eurasian (AM, AZ, BY, KG, KZ, RU, TJ, TM), European (AL, AT, BE, BG, CH, CY, CZ, DE, DK, EE, ES, FI, FR, GB, GR, HR, HU, IE, IS, IT, LT, LU, LV, MC, MK, MT, NL, NO, PL, PT, RO, RS, SE, SI, SK, SM, TR), OAPI (BF, BJ, CF, CG, CI, CM, GA, GN, GQ, GW, KM, ML, MR, NE, SN, TD, TG).

Declarations under Rule 4.17 :

— *as to applicant's entitlement to apply for and be granted a patent (Rule 4.1 7(H))*

— *as to the applicant's entitlement to claim the priority of the earlier application (Rule 4.1 7(in))*

— *of inventorship (Rule 4.17(iv))*

Published:

— *with international search report (Art. 21(3))*

(54) Title: ASSIGNMENT OF COMMUNICATION RESOURCES IN AN UNLICENSED FREQUENCY BAN TO EQUIPMENT OPERATING IN A LICENSED FREQUENCY BAND

FIG. 4

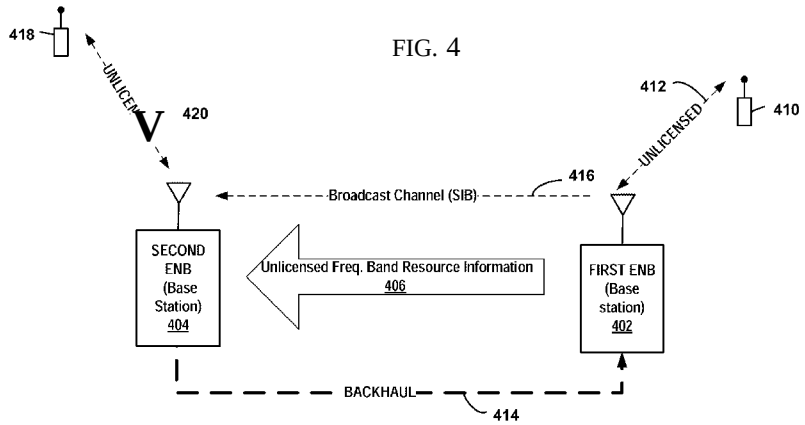

(57) Abstract: Communication equipment communicating in a licensed frequency band identifies unused unlicensed commumcation resources within an unlicensed frequency band. The commumcation equipment uses the identified unlicensed commumcation resources to communicate within the unlicensed frequency band. In some circumstances, the unused unlicensed commumcation resources are identified based on resource information received from a base station where the resource information identifies unlicensed commumcation resources that will be used by the base station. In other circumstances, the unused unlicensed communication resources are identified based on frequency band measurements of the unlicensed frequency band over an observation time duration longer than a sensing time duration used by unlicensed equipment using the unlicensed frequency band.

WO 2015/179821 A1

ASSIGNMENT OF COMMUNICATION RESOURCES IN AN UNLICENSED FREQUENCY BAND TO EQUIPMENT OPERATING IN A LICENSED FREQUENCY BAND

CLAIM OF PRIORITY

[0001] The present application claims priority to Provisional Application No. 62/002,037, Docket Number TPRO 00243 US entitled "METHODS OF RESERVING RESOURCES ON UNLICENSED BANDS", filed May 22, 2014, and to Provisional Application No. 62/002,041 , Docket Number TPRO 00250 US entitled "METHODS OF COORDINATING LTE TRANSMISSIONS ON UNLICENSED BANDS", filed May 22, 2014, both assigned to the assignee hereof, and hereby expressly incorporated by reference.

RELATED PATENT APPLICATIONS

[0002] The present application claims is related to PCT Patent Application entitled "UNLICENSED FREQUENCY BAND WITH LICENSED FREQUENCY BAND TIMING", Docket Number TUTL 000243 PC, PCT Patent Application entitled "COMMUNICATION RESOURCE SCHEDULING FOR DEVICE-TO-DEVICE (D2D) COMMUNICATION IN AN UNLICENSED FREQUENCY BAND", Docket Number TUTL 000244 PC, and PCT Patent Application entitled "PHYSICAL CHANNEL STRUCTURE FOR COMMUNICATION IN UNLICENSED FREQUENCY BAND", Docket Number TUTL 000251 PC all filed concurrently with this application, assigned to the assignee hereof, and hereby expressly incorporated by reference.

FIELD

[0003] This invention generally relates to wireless communications and more particularly to assigning unused communication resources in an unlicensed frequency band equipment operating in a licensed frequency band.

BACKGROUND

[0004] The frequency spectrum used by a particular communication system may be licensed or unlicensed. Licensed frequency spectrum (frequency band) is licensed to a system operator by a government agency such as the Federal Communications Commission (FCC). An example of such licensed spectrum includes frequency bands used for cellular communication. An unlicensed frequency band is any portion of frequency spectrum that does not require a license from the government agency to communicate with the unlicensed frequency band. Equipment operating within the unlicensed band, however, typically must adhere to regulations and/or communication standards. An example of unlicensed frequency spectrum includes frequency bands used for Institute of Electrical and Electronics Engineers (IEEE) 802.1 1 communication.

SUMMARY

[0005] Communication equipment communicating in a licensed frequency band identifies unused unlicensed communication resources within an unlicensed frequency band. The communication equipment uses the identified unlicensed communication resources to communicate within the unlicensed frequency band. In some circumstances, the unused unlicensed communication resources are identified based on resource information received from a base station where the resource information identifies unlicensed communication resources that will be used by the base station. In other circumstances, the unused unlicensed communication resources are identified based on frequency band measurements of the unlicensed frequency band over an observation time duration longer than a sensing time duration used by unlicensed equipment using the unlicensed frequency band.

BRIEF DESCRIPTION OF THE DRAWINGS

[0006] FIG. 1 is a block diagram of a licensed communication system having a licensed service area where communication equipment communicates using an unlicensed frequency band.

[0007] FIG. 2 is a block diagram of an example of a UE device suitable for use as one of the UE devices in FIG. 1.

[0008] FIG. 3 is a block diagram of an example of an enhanced Node B (eNB) suitable for use as the eNB in FIG. 1.

[0009] FIG. 4 is a block diagram of a first eNB and a second eNB of the licensed communication system for an example where unlicensed frequency band resource information is provided by the first eNB to the second eNB.

[0010] FIG. 5 is a block diagram of licensed equipment performing an observation procedure by obtaining frequency band measurements of the unlicensed frequency band.

[001 1] FIG. 6 is an illustration of a timing relationship of the unlicensed frequency of an observing procedure as compared to a sensing/back-off procedure.

[0012] FIG. 7 is an illustration of unlicensed equipment and licensed equipment for an example where the licensed equipment observing device is a UE device.

[0013] FIG. 8 is an illustration of unlicensed equipment and licensed equipment for an example where the licensed equipment observing device is an eNB.

[0014] FIG. 9 is a flow chart of a method performed at an eNB for an example of managing operation of a licensed communication system in an unlicensed frequency band in a sensing mode and a non-sensing mode.

[0015] FIG. 10 is a flow chart of a method performed at a UE device for an example of managing operation of a licensed communication system in an unlicensed frequency band in a sensing mode and a non-sensing mode.

DETAILED DESCRIPTION

[0016] FIG. 1 is a block diagram of a licensed communication system 100 having a licensed service area 102 where communication equipment 104, 106, 108, 110 communicates using an unlicensed frequency band. The licensed communication system 100 may be any communication system that uses a portion of frequency spectrum (frequency band) that is licensed to the system operator by a government agency such as the Federal Communications Commission (FCC). For the examples discussed herein, the licensed communication system 100 is a cellular system that operates in accordance with at least one revision of The Third-Generation Partnership Project Long-Term Evolution (3GPP LTE) communication specification. Examples of licensed frequency bands include Advanced Wireless Service (AWS) 4G frequencies in the range of 1,71 0-1 ,755 and 2,1 10-2,1 55 MHz. The unlicensed frequency band is any portion of frequency spectrum that does not require a license from the government agency to communicate with the unlicensed frequency band. Equipment operating within the unlicensed band, however, typically must adhere to regulations and/or communication standards. Examples of unlicensed bands include frequency bands used for IEEE 802.1 1 standards that comply with the FCC Rules and Regulations such as WiFi, Bluetooth, and Zigbee. For the example FIG. 1, an eNB 104 provides wireless service to user equipment (UE) devices 106, 108, 110 within a geographical service area (licensed service area) 102 using one or more licensed frequency bands.

[0017] A cellular communication system is typically required to adhere to a communication standard or specification. The communication specification defines physical channel structure that at least includes a data channel and a control channel for uplink and downlink transmissions and specifies at least some timing and frequency parameters for physical downlink control channels from a base station to a wireless communication device. The Third-Generation Partnership Project Long-Term Evolution (3GPP LTE) communication specification is a specification for systems where communication stations (eNodeBs) provide service to wireless communication devices (UE devices) using orthogonal frequency-division

multiple access (OFDMA) on the downlink and single-carrier frequency-division multiple access (SC-FDMA) on the uplink. Although the techniques described herein may be applied in other types of communication systems, the exemplary systems discussed herein operate in accordance with an FDD 3GPP LTE communication specification.

[0018] The eNB 104 can be any type of communication station or transceiver station or radio head and may be referred to as a base station, eNodeB, fixed station, access point, and other terms. The eNB 104 may be connected within a network of several other eNBs through a backhaul (not shown in FIG. 1). The UE devices 106, 108, 110 are any type of user devices and are sometimes referred to by other terms such as, for example, handset, phone, smartphone, mobile device, portable device, and modems. Communication using the licensed band may include downlink transmissions from the eNB to UE devices, uplink communication from UE devices to the eNB, and device-to-device (D2D) communication between two or more UE devices. The bi-directional arrows between the UE devices and the eNB in FIG. 1 represent a connection and/or an association but do not necessarily indicate an ongoing communication session. For example, a UE device may be registered to the eNB and receiving control information but not exchanging data with the eNB.

[0019] The licensed communication equipment communicates in the licensed frequency band using a licensed physical channel structure. The physical channel structure for downlink communication may differ from the physical channel structure for uplink communication. The licensed physical channel structure partitions time and frequency to define a plurality of time-frequency resources (resource elements). Sets of resources are allocated for a particular type of communication. For example, different sets of time-frequency communication resources can be allocated for data, control, and reference signals. For the examples herein, the licensed physical channel structure adheres to at least one revision of the 3GPP LTE communication specification.

[0020] Other unlicensed devices 112, 114, 116, 118 within the licensed service area 102 use an unlicensed frequency band for communication. The unlicensed

devices 112, 114, 116, 118 may include access points 112 providing service to mobile devices 114 and devices 116, 118 operating in device-to-device communication scenarios. The unlicensed communications may be ad hoc communication scenarios and may be bidirectional or one way. Accordingly, the unlicensed devices 112, 114, 116, 118 may include various types of devices and equipment. For the example of FIG. 1, an access point 112 provides wireless service to mobile devices 114 within an unlicensed service area 120 and two other devices 116, 118 communicate directly with each other using the unlicensed frequency band.

[0021] For the examples herein, the licensed equipment 104, 106, 108, 110 uses an unlicensed physical channel structure for communication in the unlicensed frequency band where the unlicensed physical channel structure at least has the same time and frequency divisions as the licensed physical channel structure. Although the frequencies are different, each frequency division in the unlicensed structure corresponds to a frequency division in the licensed structure such that the communication resource elements in the unlicensed structure correlate to the communication resource elements in the licensed structure. A reference set of communication resource elements for transmission of reference signals have the same symbol times as a reference set of resource elements allocated in the licensed physical channel structure for reference signals. Other arrangements may be used in some circumstances. An example of physical channel structure related to licensed and unlicensed communication is discussed in patent application entitled "Physical Channel Structure For Communication In Unlicensed Frequency Band", Docket Number TUTL 00251 PC and filed concurrently with this application.

[0022] For the examples herein, the licensed equipment 104, 106, 108, 110 uses the unlicensed frequency band for communication at times determined to avoid interference or at least to result in a tolerable level of interface with communication between unlicensed devices and, in some situations, other licensed devices using the unlicensed frequency band. When it is determined that unlicensed equipment is operating nearby, the unlicensed frequency band is monitored prior to transmission to determine if the band is currently in use. If it is determined that the band is not in

use, the licensed equipment transmits signals within the unlicensed frequency band. The monitoring procedure prior to transmission is the same, or at least similar to the sensing/back off procedures employed by conventional devices operating in the unlicensed frequency band. The techniques may be required by rules or standards governing operation in the unlicensed frequency band. For the example of FIG. 1, dashed arrows indicate transmissions within the unlicensed band by the licensed system equipment. In some scenarios, UE devices 108, 110 transmit signals 122, 124 to the eNB 104 within the unlicensed frequency band. The signals 122, 124 reach the unlicensed devices that are sufficiently close depending on the power level of the signal. For example, the signal 122 from one UE device 122 may reach the access point 112 and the unlicensed mobile device 114 and the signal 124 from second UE device 110 may reach the unlicensed mobile device 116, 118. In another scenario, the eNB 104 transmits a signal 126 within the unlicensed frequency band to one or more UE devices 110 and the signal 126 may reach the unlicensed mobile devices 116, 118. The unlicensed mobile device 118 may be outside of the licensed service area 102 in some situations. Since the unlicensed frequency band is monitored for energy prior to transmission by the UE device 108, interference at the unlicensed devices is reduced. In addition, interference at the licensed devices due to transmission by the unlicensed devices is also reduced.

[0023] In one example, eNBs provide unlicensed resource information to other nearby eNBs where the unlicensed resource information identifies the unlicensed communication resources that are being, or will be, used for communication in the unlicensed frequency band. The eNBs receiving the resource information identify unused unlicensed resources based on the resource information and use unlicensed communication resources least likely to cause interference.

[0024] In other examples, as discussed in further detail below, on observation procedure is performed by one or more eNBs and/or one or more UE devices. Frequency band measurements are taken by one or more eNBs and/or one or more UE devices to determine if it is likely that the unlicensed frequency band is in used by other equipment sufficiently close to result in interference. The unlicensed

frequency band is observed for a relatively long period of time as compared to conventional sensing techniques used prior to a transmission in the unlicensed frequency band. For example, the unlicensed frequency band may be monitored on the order of hours. The energy within the unlicensed frequency band is measured and compared to a threshold. If the energy level is below a threshold (e.g., no interference is detected), it is determined that no nearby equipment is using the unlicensed frequency band and the licensed equipment operates in a non-sensing mode where the sensing/monitoring of unlicensed frequency band before transmission is omitted or at least reduced. The non-sensing mode differs from a sensing mode where devices sense or monitor one or more channels before transmitting a signal in the unlicensed frequency band. The sensing mode, therefore, is employed when it is confirmed that other nearby devices are using the unlicensed frequency band for communication or when it cannot be determined that no devices are using the unlicensed frequency band.

[0025] For the examples herein, the frequency band measurements of the observation procedure also differ from conventional listen-before-talk sensing techniques in that the interference measurements are based on the entire, or nearly entire, unlicensed frequency band. Conventional sensing techniques sense particular channels within the unlicensed frequency band to detect potential signals. In contrast, for the examples herein, the unlicensed frequency band is observed to detect any energy anywhere in the band that may indicate the band is in use.

[0026] The eNB may execute the observation procedure by making the frequency band measurements and/or may instruct one or more UE devices to perform the observation procedure by taking frequency band measurements and reporting the results to the eNB. For the example discussed with reference to FIG. 9, for example, the eNB observes the unlicensed frequency band for the observation period and if the energy level does not exceed a threshold during the observation period, instructs at least one UE device to perform the observation procedure. The UE device reports the results and, if the UE did not detect energy above a threshold, the eNB instructs the UE devices that it is serving to operate in a non-sensing mode.

[0027] FIG. 2 is a block diagram of an example of a UE device 200 suitable for use as one of the UE devices 106, 108, 110 in FIG. 1. The UE device 200 includes a licensed band transceiver 202, a controller 204, as well as other components and circuitry (not shown) such as memory, for example. For the examples herein, each UE device also includes an unlicensed band transceiver 206 which includes an unlicensed band receiver 208 and an unlicensed band transmitter 210. The unlicensed band transmitter 210 transmits signals over the unlicensed frequency band where, depending on the situation, the signals may provide uplink control information to the eNB, uplink data information to the eNB, D2D control information to another UE, and/or D2D data information to another UE device. The unlicensed band transmitter 210 may also be used in some situations to transmit a reserve signal in the unlicensed frequency band as discussed below in further detail. The unlicensed band transmitter 210 may be omitted from the UE device 200. This may be the case where the UE device 200 is used to only monitor the unlicensed band and/or only to receive signals within the unlicensed band. The unlicensed band receiver 208 receives signals over the unlicensed frequency band where, depending on the situation, the signals may provide downlink control information from the eNB, downlink data information from the eNB, D2D control information from another UE, and/or D2D data information from another UE device.

[0028] The licensed band transceiver 202 includes a transmitter that transmits uplink wireless signals to eNBs and a receiver that receives downlink wireless signals from the eNBs within the licensed frequency band. The transceiver can also be configured to transmit and receive D2D signals using allocated licensed uplink communication resources. The controller 204 controls components of the UE device 200 to manage the functions of the device 200 described herein as well as to facilitate the overall functionality of the device 200. The controller 204 is connected to the transceivers 202, 208 and other components such as memory.

[0029] The unlicensed band receiver 208 may be used to sense/monitor the unlicensed frequency band before a transmission in the unlicensed frequency band when the UE device is operating in the sensing mode. In addition, the unlicensed

band receiver 208 may be used to perform the observation procedure. For the examples, the controller and the unlicensed band receiver 208 measure one or parameters that indicate the energy level within the unlicensed frequency band. An example of a suitable technique includes determining the received signal strength indicator (RSSI) which is a measurement of the power present in the received radio signal. The RSSI is compared to a threshold.

[0030] As discussed below, the unlicensed band receiver 208 is also used to measure channel conditions of the unlicensed frequency band during the non-sensing mode. Using techniques at least similar (if not the same) as the techniques used in the licensed frequency band for radio resource management (RRM) measurements.

[0031] FIG. 3 is a block diagram of an example of an eNB 300 suitable for use as the eNB 104 in FIG. 1. The eNB 300 includes a licensed band transceiver 302, a controller 304, as well as other components and circuitry (not shown) such as memory, for example. For the examples herein, the eNB also includes an unlicensed band transceiver 306 which includes an unlicensed band receiver 308 and an unlicensed band transmitter 310. The unlicensed band transmitter 310 transmits signals over the unlicensed frequency band where, depending on the situation, the signals may provide downlink control information to the UE device and downlink data information to the UE device. The unlicensed band transmitter 310 may also be used in some situations to transmit a reserve signal in the unlicensed frequency band as discussed below in further detail. The unlicensed band transmitter 310 may be omitted from the eNB 300. This may be the case where the eNB is used to only monitor the unlicensed band and/or only to receive signals within the unlicensed band. The licensed band transceiver 302 exchanges wireless signals with the UE devices 104, 106, 108, 110 within the service area 102. Transmissions within the licensed band from the eNB and from the UE devices are governed by a communication specification that defines signaling, protocols, and parameters of the transmission with the frequency band licensed to the operator of the licensed system 100. The communication specification may provide strict rules for communication

and may also provide general requirements where specific implementations may vary while still adhering to the communication specification. Although the discussion herein is directed to the 3GPP Long Term Evolution (LTE) communication specification, other communication specifications may be used in some circumstances. The communication specification defines at least a data channel and a control channel for uplink and downlink transmissions and specifies at least some timing and frequency parameters for physical channels. As discussed below in further detail, at least one of the timing parameters is applied to the unlicensed frequency band.

[0032] The licensed band transceiver 302, therefore, includes at least a downlink transmitter for transmitting downlink signals and an uplink receiver for receiving uplink signals. In some situations, the licensed band transceiver also includes downlink receiver. As discussed below, eNBs may wirelessly transmit unlicensed frequency band communication resource information in a downlink broadcast message for receipt by other nearby eNBs. Accordingly, the downlink receiver in the eNB 300 receives downlink signals from other eNBs.

[0033] The unlicensed band receiver 308 may be used to sense/monitor the unlicensed frequency band before a transmission in the unlicensed frequency band when the eNB is operating in the sensing mode. In addition, the unlicensed band receiver 308 may be used to perform the observation procedure. For the examples, the controller and the unlicensed band receiver 308 measure one or parameters that indicate the energy level within the unlicensed frequency band. An example of a suitable technique includes determining the received signal strength indicator (RSSI) which is a measurement of the power present in the received radio signal. The RSSI is compared to a threshold. The threshold used by the eNB is typically the same as the threshold used by UE devices although in some circumstances the thresholds may be different.

[0034] For the example, the eNB 300 also includes a communication interface 312 for facilitating communication over the backhaul with other eNBs and network

entities. Where X2 signaling is available, the communication interface 312 communicates over the backhaul using X2.

[0035] FIG. 4 is a block diagram of a first eNB 402 and a second eNB 404 of the licensed communication system 100 for an example where unlicensed frequency band resource information 406 is provided by the first eNB 402 to the second eNB 404. The eNBs 402, 404 are eNBs are examples of the eNBs 104, 300 discussed above and provide wireless service within the licensed frequency band in accordance with communication specification such as LTE. For the example, the first eNB 402 communicates with one or more UE devices 410 over a wireless channel 412 in the unlicensed frequency band. Accordingly, the first eNB 402 uses unlicensed communication resources in the unlicensed frequency band. For the example, the first eNB 402 provides unlicensed frequency band resource information 406 to other nearby eNBs such as the second eNB 404. The unlicensed frequency band resource information 406 is indicative of the unlicensed frequency band communication resources that are being used to communicate with the one or more UE devices 410 and/or that will be used to communicate with the one or more UE devices 410. The unlicensed frequency band communication resource information 406 in the examples herein is a message or signal that specifies the time-frequency resources that are to be used by the eNB 402 for communication in the unlicensed frequency band. The specified time-frequency resources may be used for downlink communication and/or uplink communication.

[0036] In some situations, the first eNB 402 is connected to the second eNB through a backhaul 414. The backhaul can utilize any combination of wired and wireless communication links to establish communication between the eNBs. The backhaul 414, for example, may include radio frequency and point-to-point microwave links and transmission hardware such as transmitters, receivers, wires, coaxial cables, fiber optic cables, and other known devices and equipment. In some circumstance, the backhaul supports X2 signaling and/or packet data protocols such as those used with the Internet. Where a backhaul is available, the first eNB transmits the unlicensed frequency band resource information over the backhaul 414

by applying techniques in accordance with conventional signaling over a backhaul. An X2 message, for example, can be sent including the unlicensed frequency band communication resource information.

[0037] In situations where the eNBs are not connected through a backhaul, the first eNB 402 provides unlicensed frequency band communication resource information 406 to nearby eNBs (404) by broadcasting the unlicensed frequency band communication resource information over a wireless channel 416. An example of a suitable technique of broadcasting the information 406 in an LTE system includes transmitting a System Information Blocks (SIB) message including the information 406. Since SIBs are transmitted in the downlink channel, the nearby eNBs 404 receive the SIB signals using a downlink receiver.

[0038] In another example, the first eNB 402 broadcasts the unlicensed frequency band communication resource information in the uplink channel. An example of suitable technique for broadcasting the unlicensed frequency band communication resource information on the uplink channel includes using a D2D channel defined by some revisions of the LTE standard. For example a broadcasts message similar to a D2D discovery signal can be sent from the eNB 402.

[0039] After receiving the unlicensed frequency band communication resource information 406, the second eNB 404 identifies which communication resources within the unlicensed frequency band are not in use. These unused unlicensed frequency band resources can then be used by the second eNB 404 to communicate with one or more UE devices 418 over a wireless channel 420 in the unlicensed frequency band. Generally, the unlicensed frequency band resources identified in the unlicensed frequency band communication resource information are not used by the eNB 404. Therefore, the first eNB 402 reserves unlicensed frequency band resources for communication minimizing interference in the unlicensed frequency band. In some situations, the second eNB 404 may respond to the first eNB 402 with an indication that identified resources should not be used by the first eNB 402. Such a situation may occur where the second eNB 402 requires the resources for high priority communication such as E911. Although not shown in

FIG. 4, the second eNB 404 transmits its own unlicensed frequency band communication resource information to nearby eNBs (such as the first eNB 402). In some situations there are more than two eNBs within proximity of each other and each eNB received multiple unlicensed frequency band communication resource information messages from multiple eNBs.

[0040] FIG. 5 is a block diagram of licensed equipment 502 performing an observation procedure of the unlicensed frequency band. The licensed equipment observing device is any device that operates in the licensed band. For the example of FIG. 5, the licensed equipment observing device 502 can be either an eNB or a UE device where more specific examples of each are discussed below. The licensed equipment observing device 502 monitors the unlicensed frequency band for radio energy that may be caused by unlicensed equipment 504 or licensed equipment 506 using the unlicensed frequency band. Signals 508 transmitted by an eNB or UE device and signal 510 transmitted by access points (APs) and mobile devices are received by the licensed equipment observing device 502 and evaluated. The received RF energy level is periodically measured during the observation time and compared to a threshold. If during the observation time, the energy level exceeds the threshold, the licensed equipment observing device 502 determines that other equipment within the service area is using the unlicensed spectrum. Otherwise, it is determined that the unlicensed frequency band is not in use.

[0041] Although various measurement timings and techniques can be used, the timing should be selected such that the likelihood that a device is using the unlicensed frequency band but is not detected is minimized. For example, the time period between measurements should not have a length such that a device could transmit between measurements and not be detected. The time period between measurements can be dynamic and, in some situations, be varied depending on current circumstances. Unlike for the case of RSRP/RSRQ measurements for LTE in licensed bands, there are no specific reference signals that the device is measuring in predefined subframe locations. The eNB should specify the periodicity and time period of each RSSI measurement. The eNB may determine the current periodicity

and time period of the RSSI measurements using observed traffic patterns from e.g., APs in the unlicensed band. Alternatively, the eNB may configure measurement gaps to the device to allow the UE device to perform RSSI measurements based on these measurement gaps. The UE device may also perform RSSI measurements using Autonomous Gaps. If autonomous gaps are used to perform measurements, the UE is allowed to temporarily abort communication with all serving cell(s), i.e., create autonomous gaps to perform the corresponding measurements within the limits specified in TS 36.1 33 [16]. In yet another mode of operation, the UE device with multiple receivers may continuously measure the RSSI signal for the entire duration of the measurement request from the eNB (e.g., 1 hour) in the specified frequency/band without any impact to its cellular reception. The UE may determine such measurement based on its reserved battery power remaining. Other signal measurements can also be used. Examples of other forms of measurements include BeaconRSSI, RCPI (Received channel power indicator) and RSNI (Received Signal to Noise Indicator) that are specific to WLAN in case the eNB is already aware of the type of interference expected in the region.

[0042] FIG. 6 is an illustration of a timing relationship 600 of the unlicensed frequency 602 of the observing procedure as compared to a sensing/back-off procedure. Typically, equipment operating in an unlicensed frequency band, such as an 802.1 1 band, must adhere to regulations and/or communication standards. These regulation or standards often utilize carrier sense multiple access (CSMA) where a transmitting device is required to "listen before talk". Unlicensed systems may also employ collision avoidance techniques. In some circumstances, licensed equipment operating in the unlicensed frequency band may also employ the channel access techniques required in the unlicensed frequency band.

[0043] For the example, channel access procedure used in the unlicensed frequency band is a sense and back-off procedure (sense/back-off procedure) where the unlicensed frequency band is monitored 604 for a sensing time duration 605 and, if no other devices are determined to be using the band, the eNB waits a back-off period 606 before transmitting. The back-off period 606 is dynamic and may be

determined by a formula typically applied by unlicensed equipment in the unlicensed band. The sensing time duration 605 is typically on the order of tens of microseconds.

[0044] The licensed equipment observing device 502 performs an observation procedure 610 for an observation time duration 612. As discussed above, the licensed equipment 502 continually (or periodically at a sufficient frequency) compares received signal energy in the unlicensed frequency band to a threshold. If the threshold is exceeded, it is determined that other equipment using the unlicensed frequency band is sufficiently close to create interference. As illustrated in FIG. 6, the observing time duration 612 is relatively long and is significantly longer than the sending time duration 605. The time duration 605 is selected such that it is sufficiently long to allow reliable determination that no other equipment is using the unlicensed frequency band. The observation time duration 605 is typically on the order of hours and may be several days. An example of a suitable observing time duration 605 is 12 hours. Other time durations can be used and may depend on the factors such as the expected radio traffic in the area, history of radio traffic in the area, and other factors. In some circumstances, the time duration 605 may be less than an hour.

[0045] FIG. 7 is an illustration of unlicensed equipment and licensed equipment for an example where the licensed equipment observing device 502 is a UE device 702. The observing UE device 702 monitors the unlicensed frequency band for energy from signals transmitted within the unlicensed frequency band where the signals may include signals 704 transmitted by another UE device 706, signals 708 transmitted by an eNB 710, signals 712 transmitted by a mobile device 714, and signals 716 transmitted by an access point (AP) 718. The signals 704, 708 result from communication 720 in the unlicensed frequency band between the eNB 710 and the UE device 706. Therefore, the signal energy at the UE device 702 may be due to licensed equipment operating in the unlicensed frequency band. The signals 712, 716 result from communication 722 in the unlicensed frequency band between the access point 718 and the mobile device 714. The signal energy, therefore, at the

UE device 702 may result from one more unlicensed devices operating in the unlicensed frequency band.

[0046] The UE device 702 observes the unlicensed frequency band by taking frequency band measurements and, if the detected energy is below the threshold for a sufficiently long time, determines that the unlicensed frequency band is not being used by any nearby equipment. For the examples herein, the UE device 702 reports the results in frequency band measurement information 724 to its serving eNB 726. The eNB 726, at least partially based on the frequency band measurement information 724, determines whether communications 728 in the unlicensed frequency band should be modified. For example, the eNB 726 may determine that the eNB and UE device can operate in a non-sensing mode where the equipment does not employ a sense/back-off procedure before transmitting in the unlicensed frequency band. An example of suitable technique includes operating in the unlicensed frequency band with the same channel access protocol used in the licensed frequency band. The eNB 726 and the UE device 702, therefore, operate in sensing mode when the unlicensed frequency band is being used by other nearby equipment and operate in a non-sensing mode when it is determined that the unlicensed frequency band is not being used by other equipment.

[0047] The frequency band measurement information 724 is indicative of the frequency band measurements taken by the UE device. In some situations, frequency band measurement information 724 is indicative of a comparison of one or more measured energy levels to the threshold. For example, the frequency band measurement information 724 may simply be a flag indicating that the energy level has exceeded the threshold within the observation time period. In other situations, the frequency band measurement information 724 may be measurements, values, or data based on measurement values which can be used by the eNB to make determinations regarding the use of the unlicensed frequency band by other devices.

[0048] FIG. 8 is an illustration of unlicensed equipment and licensed equipment for an example where the licensed equipment observing device 502 is an eNB 726. The eNB 726 monitors the unlicensed frequency band for energy from signals

transmitted within the unlicensed frequency band where the signals may include signals 704 transmitted by another UE device 706, signals 708 transmitted by an eNB 710, signals 712 transmitted by a mobile device 714, and signals 716 transmitted by an access point (AP) 718. The signals 704, 708 result from communication 720 in the unlicensed frequency band between the eNB 710 and the UE device 706. Therefore, the signal energy at the eNB 726 may be due to licensed equipment operating in the unlicensed frequency band. The signals 712, 716 result from communication 722 in the unlicensed frequency band between the access point 718 and the mobile device 714. The signal energy, therefore, at the eNB 726 may result from one or more unlicensed devices operating in the unlicensed frequency band.

[0049] The eNB 726 monitors the unlicensed frequency band and, if the detected energy is below the threshold for a sufficiently long time, determines that the unlicensed frequency band is not being used by any nearby equipment. The eNB 726, at least partially based on the measurements of the unlicensed frequency band, determines whether communications in the unlicensed frequency band should be modified. For example, the eNB 726 may determine that the eNB and UE device can operate in the non-sensing mode where the equipment does not employ a sense/back-off procedure before transmitting in the unlicensed frequency band.

[0050] In many circumstances, the eNB 726 bases the determination on multiple interference measurement reports receives from multiple UE devices as well as on its own measurements of the unlicensed frequency band. The eNB 726 may approach the use of the non-sensing mode more conservatively. In case any UE device reports a measurement above the threshold the eNB 726 should not apply the non-sensing mode. Another technique includes having coordination among eNBs whereby the first eNB 402 informs the second eNB 404 in case eNB 402 detects interference in the unlicensed band but the second eNB 404 does not. This technique assumes that the two eNBs are in close proximity.

[0051] The eNB 726 and the UE device 702 continue to monitor the unlicensed frequency band when in the non-sensing mode. In one example, UE devices

operating in the non-sensing mode perform Radio Resource Management (RRM) measurements of the unlicensed frequency band and report the RRM measurements to the eNB 726. The eNB 726 configures one or more thresholds in the UE devices either by broadcast (SIB) or dedicated controls signals. The thresholds may include one or more of a radio signal strength indicator (RSSI), a received channel power indicator (RCPI), a received signal to noise indicator (RSNI), and an average noise plus interference (ANPI) indicator. The eNB compares the reported RRM measurements to thresholds and makes an assessment of the channel characteristics. In some situations, the channel characteristics may indicate a potential interferer which triggers the eNB to return to sensing mode, perform the frequency band observation procedure, and/or instruct one or more UE devices to perform the frequency band observation procedure.

[0052] FIG. 9 is a flow chart of a method performed at an eNB for an example of managing operation of a licensed communication system in an unlicensed frequency band in a sensing mode and a non-sensing mode.

[0053] At step 902, the eNB performs a frequency band observation procedure on the unlicensed frequency band. The eNB periodically measures the energy level within the unlicensed frequency band for the observation time. As discussed above, an example of a suitable technique of observing the band includes measuring RSSI over for the entire band and comparing the level to a threshold.

[0054] At step 904, if the energy level exceeds a threshold, the eNB determines that other devices are transmitting within the unlicensed frequency band. If other devices are using the unlicensed frequency band, the method continues at step 906. Otherwise, the method continues at step 908.

[0055] At step 906, the system communicates in the unlicensed frequency band 906 in the sensing mode. Since other devices are using the unlicensed frequency band, the licensed equipment (eNB and UE devices) must sense the band before transmitting. The method returns to step 902 to perform the observation procedure. Although the eNB can immediately begin the procedure, it some circumstances the eNB can delay before beginning the procedure. The eNB could, for example, wait at

least an hour before performing step 902. Delaying is not critical for the eNB since the eNB is not power constrained. Therefore, even continuous measurement is not a significant consideration for the eNB in most circumstances. The length of the delay may be based on a fixed time or may be based on other factors. For example, when measured channel quality is above a threshold, the eNB may perform the observation procedure.

[0056] At step 908, the eNB instructs one or more UE devices to perform a frequency band observation procedure. Although the eNB has not detected significant energy in the unlicensed frequency band, it is possible that other devices are operating in the unlicensed frequency band. Such a situation is often referred to as the "hidden node". The UE devices are more likely to detect the energy of these other devices in these cases. In some situations, the UE devices and the eNB may perform their observation procedures simultaneously or at least have overlapping observation times. In most situations, in order to avoid unnecessary power consumption by the UE devices, the eNB does not instruct the UE devices to perform the observation procedure until a relatively high confidence level that no other devices are present is achieved.

[0057] At step 910, the eNB receives, from the one or more UE devices, the results of the observation procedures performed by the UE devices. For the example, the UE devices transmit frequency band measurement information indicative of the observation procedure measurements. The information includes measurements or information based on measurements. For example, the results may include information regarding whether the UE device has determined whether or not other devices are using the unlicensed frequency band. When performing the observation procedure for the examples herein, each UE device periodically measures the RSSI over an observation period, compares the RSSI levels to a threshold, and reports to the eNB the results. The observation times and the thresholds of the UE devices and the eNB may be the same or may be different, depending on the particular implementation. The UE devices, however may report the measurements or other information in some situations.

[0058] A step 912, the eNB determines whether the unlicensed frequency band is in use by other devices. The eNB makes the determination at least partially based on the results received from one or more of the UE devices. Where the results indicate that an UE device has determined that the energy level has exceeded the threshold and other devices are using the unlicensed frequency band, the eNB determines that the band is in use. Where measurements or other less definitive information is provided by the UE devices, the eNB processes the information to determine whether the unlicensed frequency band is in use by other devices. The eNB may process the information from each UE device individually or may process the information from multiple UE devices collectively. In some situations, the eNB may include measurements taken at the eNB when evaluating the results provided by the UE devices and determining whether the unlicensed frequency band is in use by other devices. If it is determined that the unlicensed frequency band is in use by other devices, the method returns to step 906. Otherwise, the method continues at step 914.

[0059] At step 914, the system operates in the unlicensed frequency band in the non-sensing mode. The eNB instructs the UE devices to operate in the non-sensing mode starting at a particular frame, subframe, or time. The eNB and the UE devices do not sense the unlicensed frequency band before transmissions as dictated by the rules or standards governing the unlicensed frequency band. Rather, the licensed equipment operates similarly to the operation in the licensed frequency band. For example, the techniques used in an LTE system operating in accordance with one or more revision of the 3GPP LTE standard are used to communicate in the unlicensed frequency band (at the different frequencies).

[0060] At step 916, the eNB receives RRM measurements from the UE devices. For the examples, the eNB receives the RRM measurement while the system is communicating in the non-sensing mode (step 914). For the example, the RRM measurements are the same RRM measurements taken and reported by the UE devices when operating in the licensed frequency band except that the

measurements are taken at the different frequencies of the unlicensed frequency band.

[0061] At step 918, the eNB determines whether the frequency band observation procedure should be performed by the eNB. The determination may be based on several factors or combination of factors including, but not limited to, RRM measurements, channel characteristics, elapsed time since the eNB has performed the observation procedure, and the elapsed time since an eNB as performed an observation procedure. If it is determined that the observation procedure should be performed, the method returns to step 902. Otherwise, the method continues at step 920. As discussed above, the observation procedure may be performed by the UE device and the eNB at the same time in some circumstances. Where the decision to perform the observation procedure is based on RRM measurements from the UE devices, the eNB may determine that the UE device should perform the observation procedure at step 902.

[0062] At step 920, the eNB determines whether the frequency band observation procedure should be performed at one or more UE devices. The determination may be based on several factors or combination of factors including, but not limited to, RRM measurements, channel characteristics, elapsed time since the eNB has performed the observation procedure, and the elapsed time since an eNB as performed an observation procedure. If it is determined that the observation procedure should be performed, the method returns to step 908. Otherwise, the method returns to step 914. As discussed above, the observation procedure may be performed by the UE device and the eNB and the same time in some circumstances. The eNB may determine that the eNB should also perform the observation procedure at step 908.

[0063] FIG. 10 is a flow chart of a method performed at a UE device for an example of managing operation of a licensed communication system in an unlicensed frequency band in a sensing mode and a non-sensing mode.

[0064] At step 1002, the UE device operates in the sensing mode in the unlicensed frequency band. Accordingly, the UE device monitored the unlicensed frequency band before transmission in the unlicensed frequency band.

[0065] At step 1004, the UE device determines if an instruction has been received from the eNB to perform frequency band observation procedure. If an instruction has been received, the method continues at step 1006. Otherwise, the method returns to step 1002.

[0066] A step 1006, the UE device performs the frequency band observation procedure. As discussed above, the UE device measures the energy in the unlicensed frequency band for an observation time. The UE device may measure RSSI for the band, for example.

[0067] At step 1008, the UE device reports the results of the observation procedure. For the example, the results include a determination of whether the RSSI level exceeded a threshold. In some circumstances, however, results of the observation procedure may include the RSSI measurements and/or other information.

[0068] At step 1010, the UE device determines if an instruction to operate in the non-sensing mode has been received. If the eNB instructs the UE device to operate in the non-sensing mode, the UE device continues at step 1012 where the device operates in the non-sending mode. Otherwise, the method returns to step 1002.

[0069] At step 1014 and 1016, the UE device performs and reports RRM measurements to the eNB while operating in the sensing mode. As discussed above, the RRM measurement procedure is similar to the procedure followed in the licensed frequency band.

[0070] At step 1018, the UE device determines whether an instruction has been received to operate in the sensing mode. If an instruction has been received, the method returns to step 1002. Otherwise, the method continues at step 1020.

[0071] At step 1020, the eNB determines whether an instruction has been received to perform the observation procedure. If an instruction has been received, the method proceeds to step 1022. Otherwise, the method returns to step 1012.

[0072] At step 1022, the UE performs the observation procedure and reports the results at step 1024. In some situations, the eNB instructs the UE device to operate in the sensing mode when performing the observation procedure, and in other situations, the UE device continues operating in the non-sensing mode, reporting RRM measurements and performing the observation procedure.

[0073] Clearly, other embodiments and modifications of this invention will occur readily to those of ordinary skill in the art in view of these teachings. The above description is illustrative and not restrictive. This invention is to be limited only by the following claims, which include all such embodiments and modifications when viewed in conjunction with the above specification and accompanying drawings. The scope of the invention should, therefore, be determined not with reference to the above description, but instead should be determined with reference to the appended claims along with their full scope of equivalents.

[0074] What is claimed is:

CLAIMS

1. A method comprising:

wirelessly communicating with a user equipment (UE) device over a licensed frequency band;

identifying unused communication resources within a set of allocated unlicensed communication resources of an unlicensed frequency band, the set of allocated unlicensed communication resources allocated for communication with UE devices within a wireless service area; and

assigning at least some of the unused communication resources for communication with the UE device over the unlicensed frequency band.

2. The method of claim 1 wherein the identifying comprises:

receiving, from a base station, resource information indicating unavailable communication resources that have been selected by the base station for communication within the unlicensed frequency band; and

identifying, from the set of unlicensed communication resources, the unused communication resources as resources not identified as unavailable communication resources.

3. The method of claim 2, wherein the receiving comprises:

receiving the resource information over a backhaul connected to the base station.

4. The method of claim 2, wherein the receiving comprises:

receiving the resource information in a broadcast message wirelessly transmitted from the base station.

5. The method of claim 1, wherein the identifying comprises:

receiving, from the UE device, frequency band measurement information indicative of measurements taken by the UE device of the unlicensed frequency band; and

identifying the unused communication resources based on the interference measurement information.

6. The method of claim 5, wherein the identifying the unused communication resources based on the frequency band measurement information comprises determining that the unlicensed frequency band is not in use based on the frequency band measurement information and identifying the set of unlicensed communication resources as the unused communication resources.

7. The method of claim 6, wherein the frequency band measurement information is indicative of an energy level of the unlicensed frequency band for a time period longer than a sensing time period used to sense the unlicensed frequency band before transmission in the unlicensed frequency band.

8. The method of claim 7, wherein the determining that the unlicensed band is not in use comprises comparing the energy level to a threshold.

9. The method of claim 8, wherein the frequency band measurement information is indicative of received signal strength indicator (RSSI) of the unlicensed frequency band measured by the UE device.

10. The method of claim 6, further comprising:

in response to determining that unlicensed frequency band is not in use, communicating in a non-sensing mode comprising transmitting signals in the

unlicensed frequency band without sensing the unlicensed frequency band prior to transmission; and

instructing the UE device to communicate in the non-sensing mode.

11. The method of claim 10, further comprising:

receiving, from the UE device, radio resource management (RRM) measurement information indicative of channel measurements taken by the UE device of the unlicensed frequency band after at least some of the set of allocated communication resources are assigned to the UE device; and

in response to determining that the RRM measurements indicate a potential for use of the unlicensed frequency band by other devices, transmitting an instruction to the UE device to perform a frequency band observation procedure to obtain additional frequency band measurements.

12. The method of claim 11, further comprising:

determining, based at least on results of the frequency band observation procedure that the unlicensed frequency band is in use;

in response to determining that unlicensed frequency band is in use, communicating in a sensing mode comprising sensing the unlicensed frequency band prior to transmission of signals in the unlicensed frequency;

instructing the UE device to communicate in the sensing mode.

13. The method of claim 12, wherein the determining that the unlicensed frequency band is in use comprises determining, based at least on interference information from an eNB.

14. The method of claim 1, wherein the determining comprises:

measuring an energy level of the unlicensed frequency band for a time period longer than a sensing time period used to sense the unlicensed frequency band before transmission in the unlicensed frequency band; and

identifying the unused communication resources based on the energy level.

15. The method of claim 14, wherein the measuring comprises measuring an energy level of the entire unlicensed frequency band.

16. The method of claim 15, wherein the measuring comprises measuring a received signal strength indicator (RSSI) of the unlicensed frequency band.

17. A method performed at a user equipment (UE) device, the method comprising:

receiving an instruction from an evolved NodeB (eNB);

in response to the instruction, measuring an energy level of the unlicensed frequency band for a time period longer than a sensing time period used to sense the unlicensed frequency band before transmission in the unlicensed frequency band; and

reporting the frequency band measuring information indicative of the measuring energy level to the eNB.

18. The method of claim 17, further comprising:

comparing the measured energy level to a threshold, the frequency band measuring information is indicative of the comparison of the energy level to the threshold.

19. The method of claim 17, wherein the measuring information is a measured value.

20. The method of claim 17, wherein the measuring comprises measuring an energy level of the entire unlicensed frequency band.

21. The method of claim 17, wherein the measuring the energy level of the unlicensed frequency band comprises measuring a received signal strength indicator (RSSI) of the unlicensed frequency band.

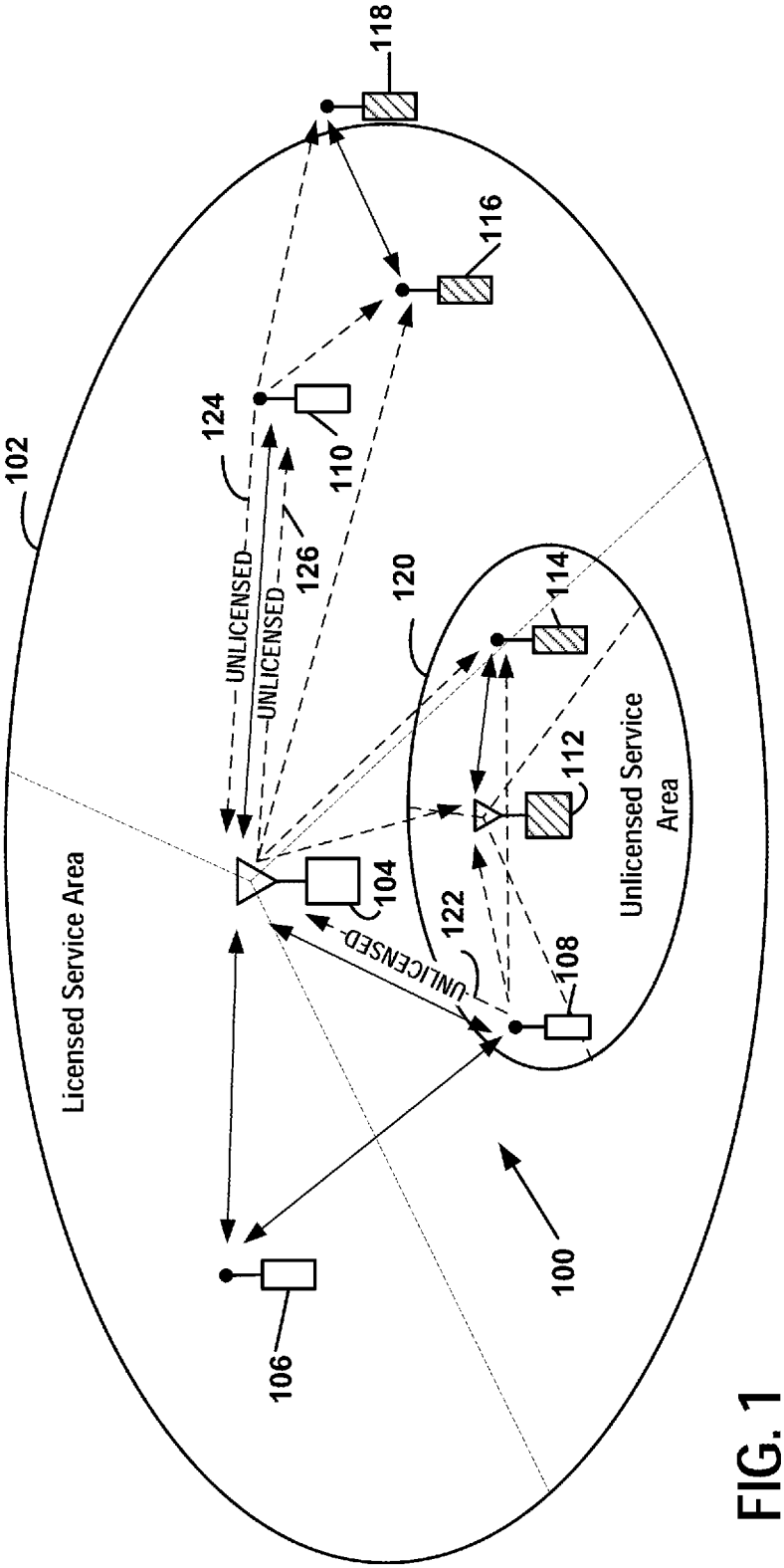
118
116
124
110
102
126
UNLICENSED
UNLICENSED
120
114
112
Licensed Service Area
104
122
UNLICENSED
108
Unlicensed Service Area
100
106

FIG. 1

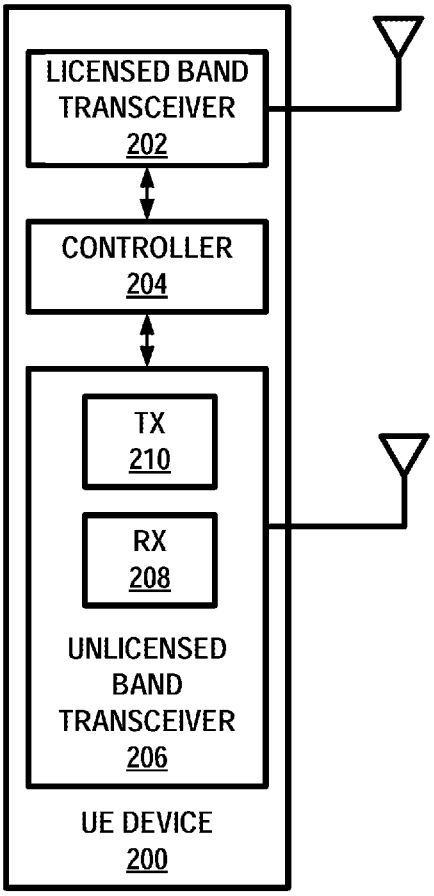
LICENSED BAND TRANSCEIVER 202
CONTROLLER 204
TX 210
RX 208
UNLICENSED BAND TRANSCEIVER 206
UE DEVICE 200

FIG. 2

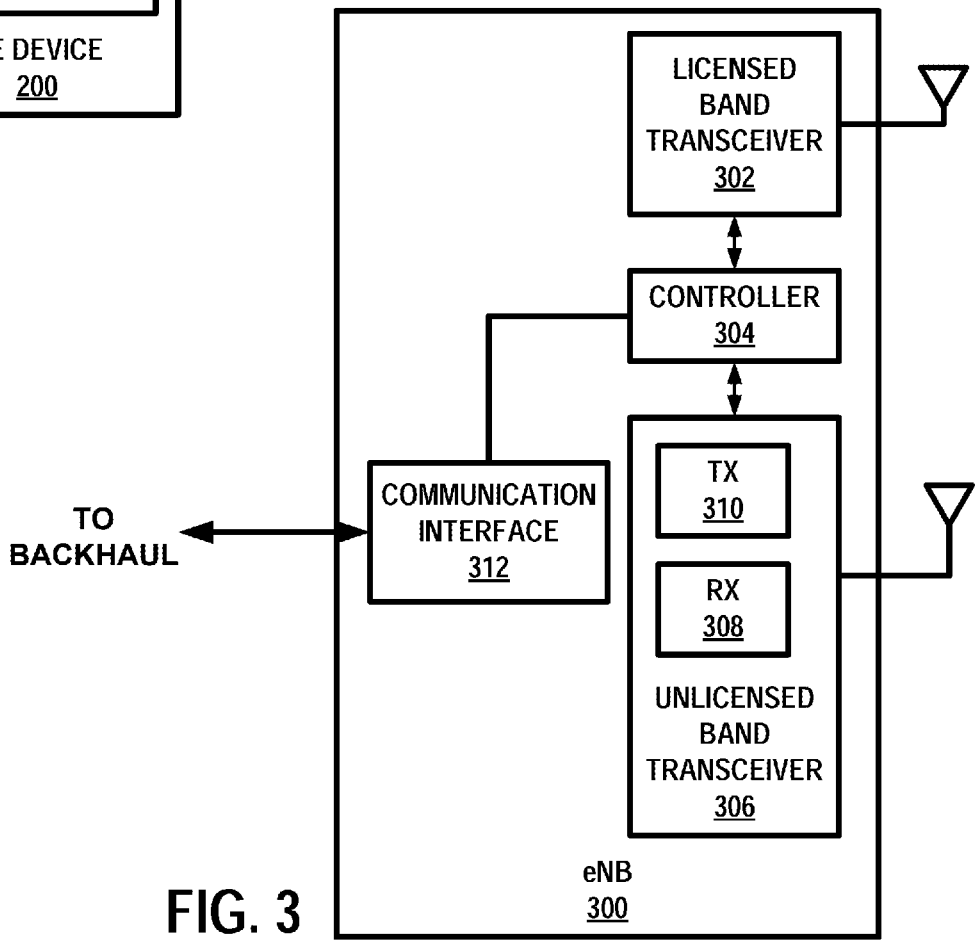
LICENSED BAND TRANSCEIVER 302
CONTROLLER 304
TO BACKHAUL
COMMUNICATION INTERFACE 312
TX 310
RX 308
UNLICENSED BAND TRANSCEIVER 306
eNB 300

FIG. 3

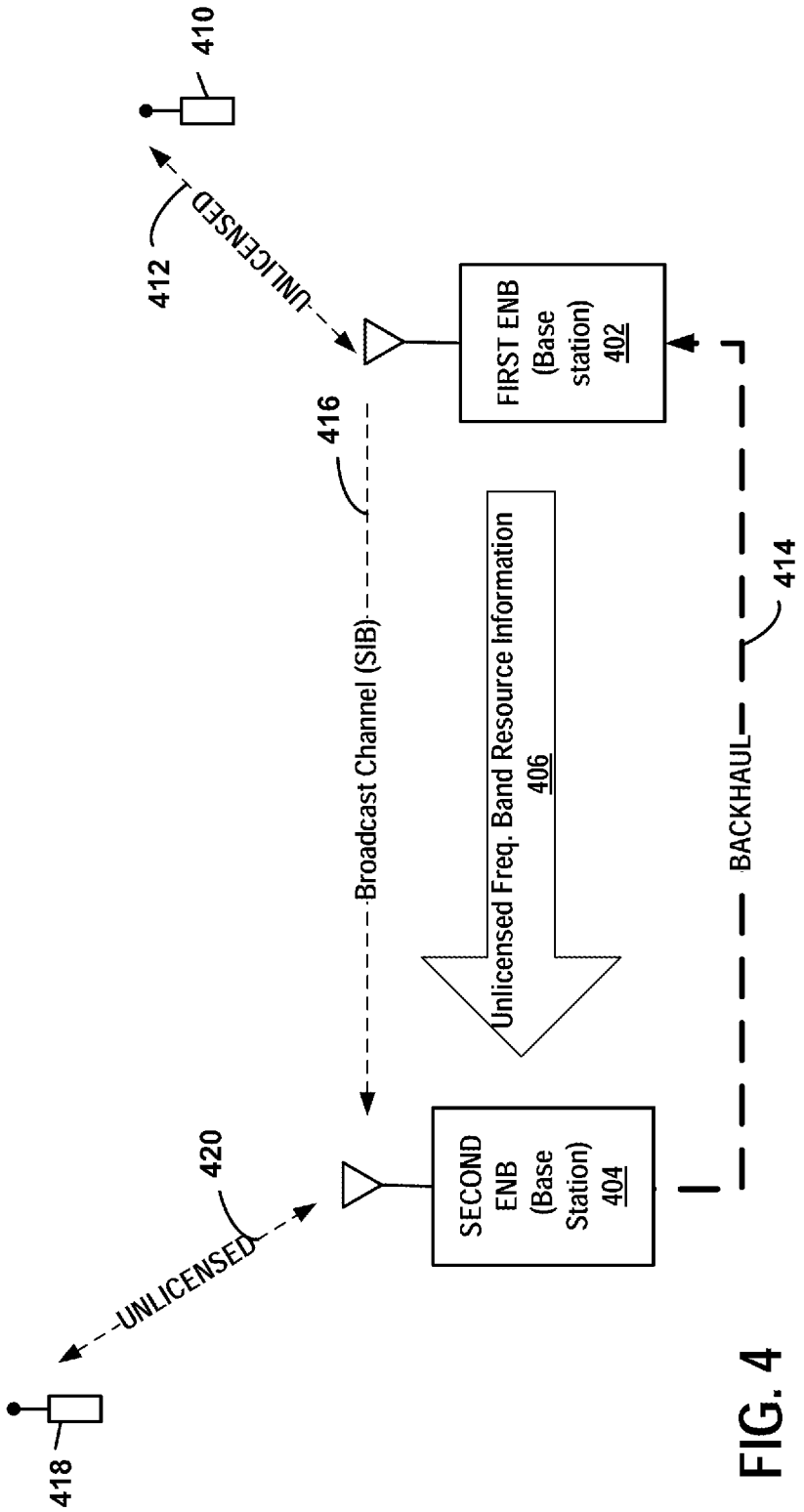
410
412
UNLICENSED
FIRST ENB (Base station) 402
416
Broadcast Channel (SIB)
Unlicensed Freq. Band Resource Information 406
414
BACKHAUL
420
UNLICENSED
SECOND ENB (Base Station) 404
418

FIG. 4

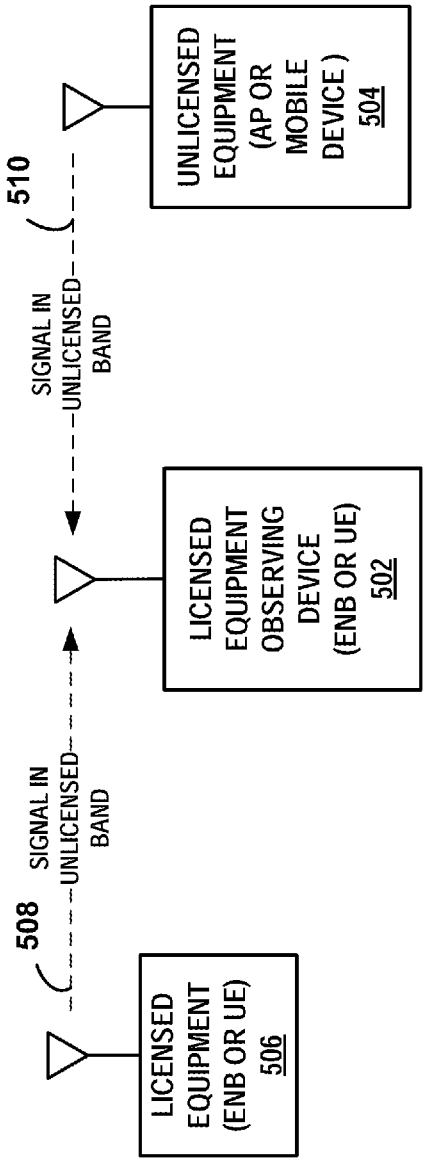
LICENSED EQUIPMENT (ENB OR UE) 506
508
SIGNAL IN UNLICENSED BAND
LICENSED EQUIPMENT OBSERVING DEVICE (ENB OR UE) 502
SIGNAL IN UNLICENSED BAND
510
UNLICENSED EQUIPMENT (AP OR MOBILE DEVICE) 504

FIG. 5

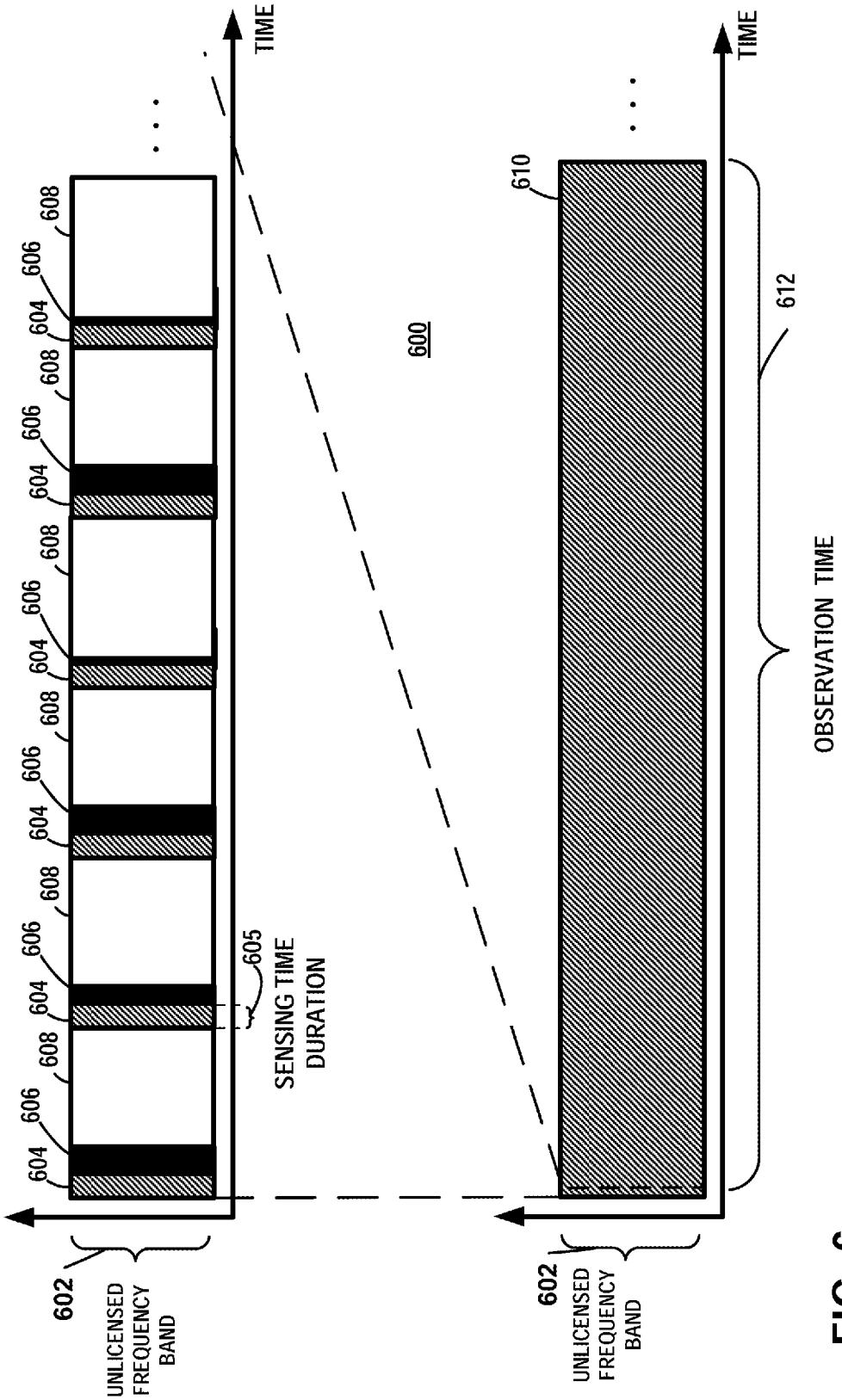
TIME
TIME
600
602
UNLICENSED FREQUENCY BAND
604
606
608
605
SENSING TIME DURATION
610
612
OBSERVATION TIME
602
UNLICENSED FREQUENCY BAND

FIG. 6

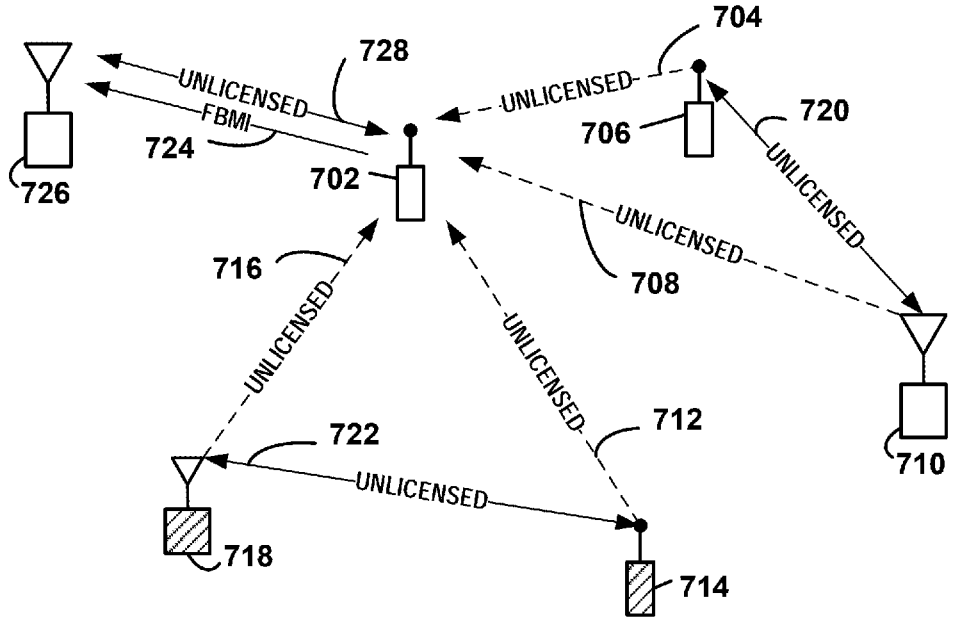
704
728
UNLICENSED
UNLICENSED
FBMI
720
706
724
726
702
UNLICENSED
UNLICENSED
716
708
UNLICENSED
UNLICENSED
712
722
710
UNLICENSED
718
714

FIG. 7

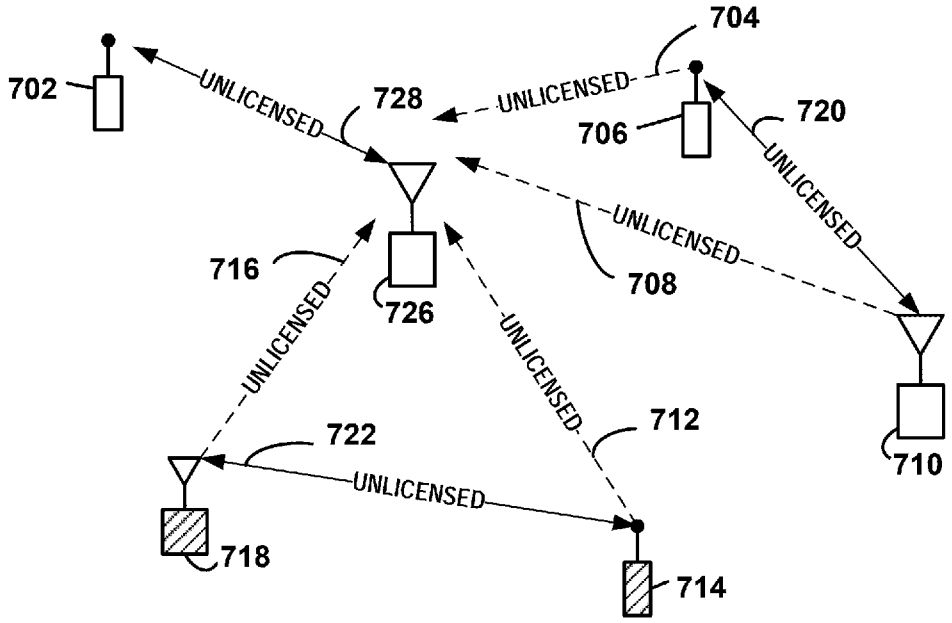
704
702
UNLICENSED
728
UNLICENSED
706
720
UNLICENSED
UNLICENSED
716
708
726
UNLICENSED
UNLICENSED
712
722
710
UNLICENSED
718
714

FIG. 8

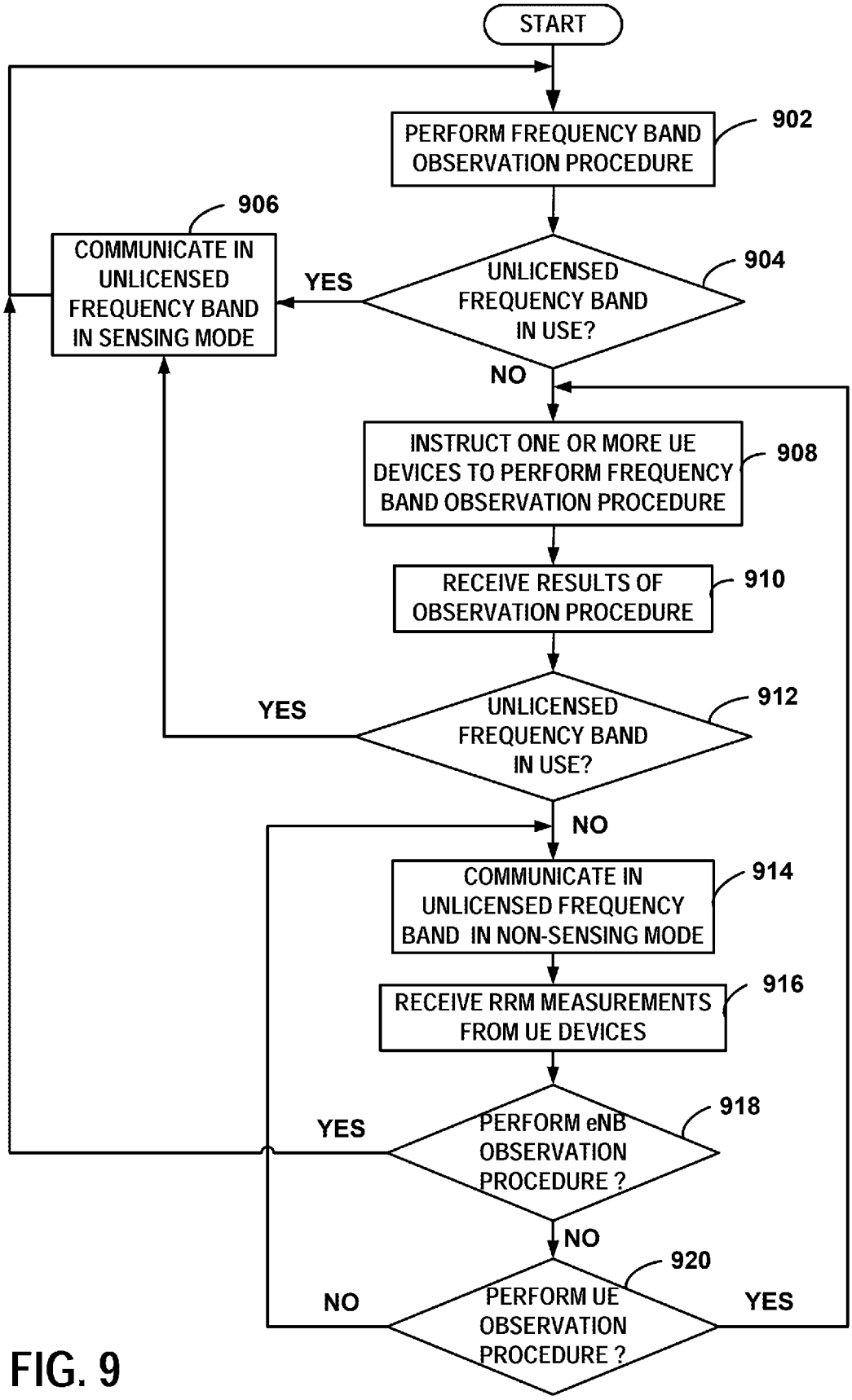
START
PERFORM FREQUENCY BAND OBSERVATION PROCEDURE
902
UNLICENSED FREQUENCY BAND IN USE?
904
YES
COMMUNICATE IN UNLICENSED FREQUENCY BAND IN SENSING MODE
906
NO
INSTRUCT ONE OR MORE UE DEVICES TO PERFORM FREQUENCY BAND OBSERVATION PROCEDURE
908
RECEIVE RESULTS OF OBSERVATION PROCEDURE
910
UNLICENSED FREQUENCY BAND IN USE?
912
YES
NO
COMMUNICATE IN UNLICENSED FREQUENCY BAND IN NON-SENSING MODE
914
RECEIVE RRM MEASUREMENTS FROM UE DEVICES
916
PERFORM eNB OBSERVATION PROCEDURE ?
918
YES
NO
PERFORM UE OBSERVATION PROCEDURE ?
920
NO
YES

FIG. 9

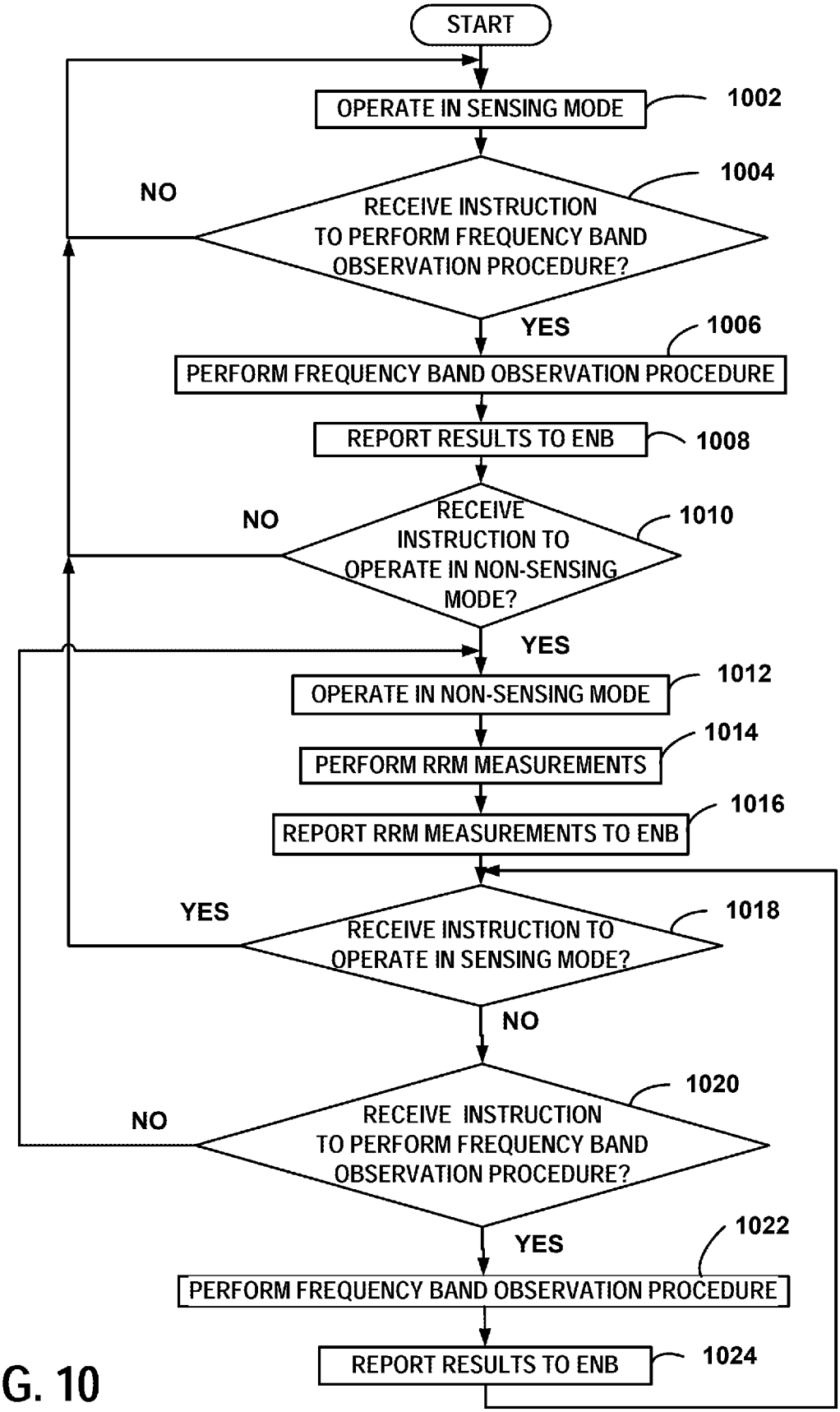
START
OPERATE IN SENSING MODE
1002
RECEIVE INSTRUCTION TO PERFORM FREQUENCY BAND OBSERVATION PROCEDURE?
1004
NO
YES
PERFORM FREQUENCY BAND OBSERVATION PROCEDURE
1006
REPORT RESULTS TO ENB
1008
RECEIVE INSTRUCTION TO OPERATE IN NON-SENSING MODE?
1010
NO
YES
OPERATE IN NON-SENSING MODE
1012
PERFORM RRM MEASUREMENTS
1014
REPORT RRM MEASUREMENTS TO ENB
1016
RECEIVE INSTRUCTION TO OPERATE IN SENSING MODE?
1018
YES
NO
RECEIVE INSTRUCTION TO PERFORM FREQUENCY BAND OBSERVATION PROCEDURE?
1020
NO
YES
PERFORM FREQUENCY BAND OBSERVATION PROCEDURE
1022
REPORT RESULTS TO ENB
1024

FIG. 10

INTERNATIONAL SEARCH REPORT

International application No.
PCT/US2015/032272

A. CLASSIFICATION OF SUBJECT MATTER

H04W 72/04(2009.01)i, H04W 24/08(2009.01)i

According to International Patent Classification (IPC) or to both national classification and IPC

B. FIELDS SEARCHED

Minimum documentation searched (classification system followed by classification symbols)
H04W 72/04; H04B 7/26; H04W 74/08; H04W 88/08; H04B 17/00; H04W 84/18; H04W 88/06; H04W 28/26; H04W 24/08

Documentation searched other than minimum documentation to the extent that such documents are included in the fields searched
Korean utility models and applications for utility models
Japanese utility models and applications for utility models

Electronic data base consulted during the international search (name of data base and, where practicable, search terms used)
eKOMPASS(KIPO internal) & Keywords: user equipment, evolved NodeB, licensed frequency band, unlicensed frequency band, unused communication resource

C. DOCUMENTS CONSIDERED TO BE RELEVANT

Category*	Citation of document, with indication, where appropriate, of the relevant passages	Relevant to claim No.
X	US 2010-0029216 A1 (ALEKSANDAR JOVICIC et al.) 04 February 2010 See paragraphs [0028]-[0034] ; claims 1, 3-6; and figure 4.	1,5-6,10
A		2-4,7-9,11-21
A	US 2008-0298450 A1 (HONGLIANG ZHANG et al.) 04 December 2008 See paragraphs [0039]-[0040] , [0042]-[0044] ; claims 3, 5; and figures 6-7.	1-21
A	US 2014-0036853 A1 (HAKSEONG KIM et al.) 06 February 2014 See paragraphs [0162], [0176H0177] , [0187], [0192]; claims 1, 4, 7; and figures 17-19.	1-21
A	WO 2013-155672 A1 (RENESAS MOBILE CORPORATION) 24 October 2013 See paragraphs [0024]-[0025] ; and figure 5.	1-21
A	US 2013-0143502 A1 (MUHAMMAD KAZMI et al.) 06 June 2013 See paragraphs [0061]-[0068]; and figure 5.	1-21

☐ Further documents are listed in the continuation of Box C.

☒ See patent family annex.

* Special categories of cited documents:
"A" document defining the general state of the art which is not considered to be of particular relevance
"E" earlier application or patent but published on or after the international filing date
"L" document which may throw doubts on priority claim(s) or which is cited to establish the publication date of another citation or other special reason (as specified)
"O" document referring to an oral disclosure, use, exhibition or other means
"P" document published prior to the international filing date but later than the priority date claimed
"T" later document published after the international filing date or priority date and not in conflict with the application but cited to understand the principle or theory underlying the invention
"X" document of particular relevance; the claimed invention cannot be considered novel or cannot be considered to involve an inventive step when the document is taken alone
"Y" document of particular relevance; the claimed invention cannot be considered to involve an inventive step when the document is combined with one or more other such documents,such combination being obvious to a person skilled in the art
"&" document member of the same patent family

Date of the actual completion of the international search	Date of mailing of the international search report
09 September 2015 (09.09.2015)	**09 September 2015 (09.09.2015)**

Name and mailing address of the ISA/KR	Authorized officer
International Application Division Korean Intellectual Property Office 189 Cheongsa-ro, Seo-gu, Daejeon Metropolitan City, 35208, Republic of Korea Facsimile No. +82-42-472-7140	KANG, Hee Gok Telephone No. +82-42-481-8264

INTERNATIONAL SEARCH REPORT

Information on patent family members

International application No.

PCT/US2015/032272

Patent document cited in search report	Publication date	Patent family member(s)	Publication date
US 2010-0029216 Al	04/02/2010	CN 102124809 A	13/07/2011
		CN 102124809 B	01/04/2015
		EP 2324679 A2	25/05/2011
		JP 05420660 B2	19/02/2014
		JP 2011-530216 A	15/12/2011
		KR 10-1225634 Bl	24/01/2013
		KR 10-2011-0039572 A	19/04/2011
		TW 201010481 A	01/03/2010
		us 8078111 B2	13/12/2011
		wo 2010-014559 A2	04/02/2010
		wo 2010-014559 A3	22/07/2010
US 2008-0298450 Al	04/12/2008	CA 2616715 Al	08/02/2007
		CN 101401480 A	01/04/2009
		EP 1911184 A2	16/04/2008
		EP 1911184 A4	13/02/2013
		IL 189056 DO	07/08/2008
		JP 05166265 B2	21/03/2013
		JP 2009-504010 A	29/01/2009
		US 2012-0270504 Al	25/10/2012
		us 2014-0064227 Al	06/03/2014
		us 8213867 B2	03/07/2012
		us 8583047 B2	12/11/2013
		us 8958751 B2	17/02/2015
		wo 2007-015962 A2	08/02/2007
		wo 2007-015962 A3	24/05/2007
		wo 2007-015962 A9	28/06/2007
US 2014-0036853 Al	06/02/2014	KR 10-2014-0010450 A	24/01/2014
		wo 2012-144801 A2	26/10/2012
		wo 2012-144801 A3	10/01/2013
WO 2013-155672 Al	24/10/2013	None	
US 2013-0143502 Al	06/06/2013	CN 103069882 A	24/04/2013
		EP 2604072 Al	19/06/2013
		WO 2012-021098 Al	16/02/2012