March 14, 1939. J. F. COOPER 2,150,420

MOTOR MOUNTING FOR INFLATABLE BOATS

Filed Feb. 20, 1937 2 Sheets-Sheet 1

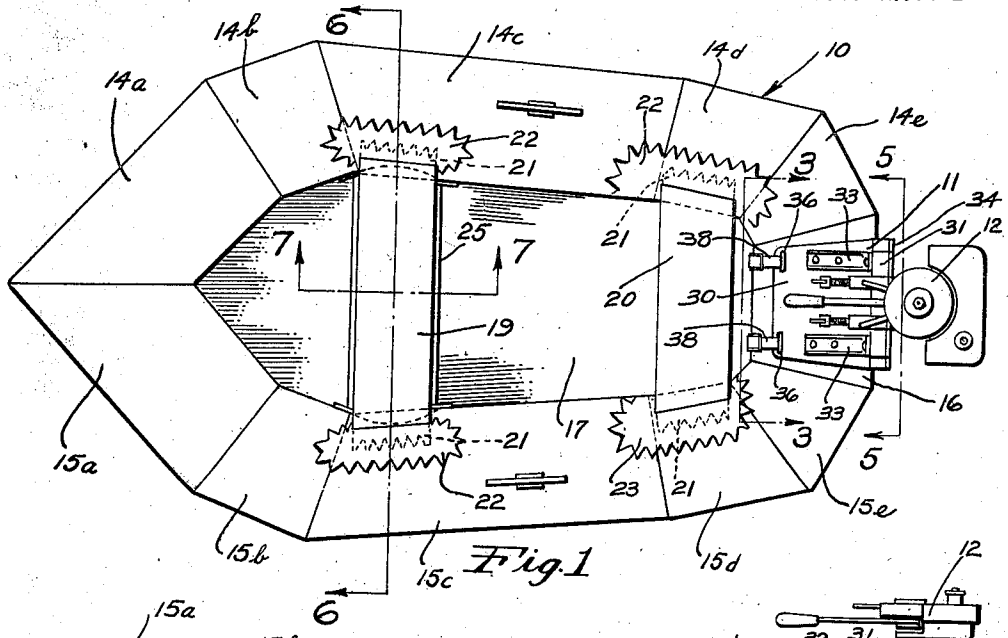


Fig. 1

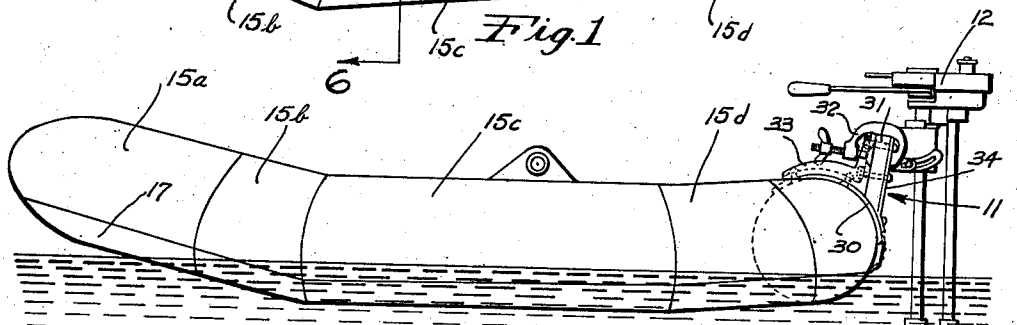


Fig. 2

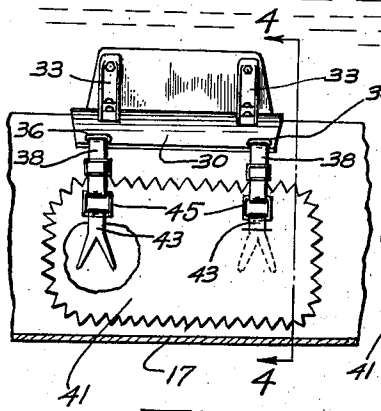


Fig. 3

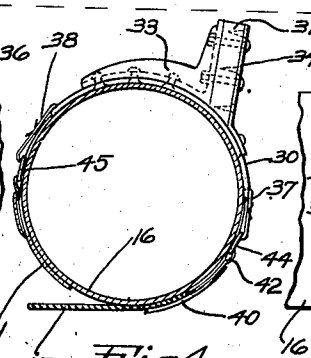


Fig. 4

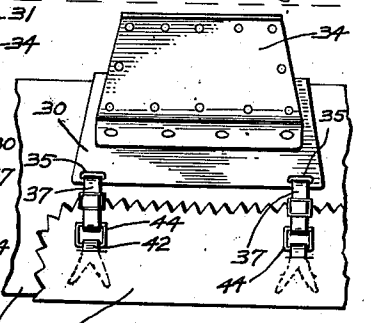


Fig. 5

Inventor
James F. Cooper

By

Attorney

March 14, 1939. J. F. COOPER 2,150,420

MOTOR MOUNTING FOR INFLATABLE BOATS

Filed Feb. 20, 1937 2 Sheets-Sheet 2

Fig. 6

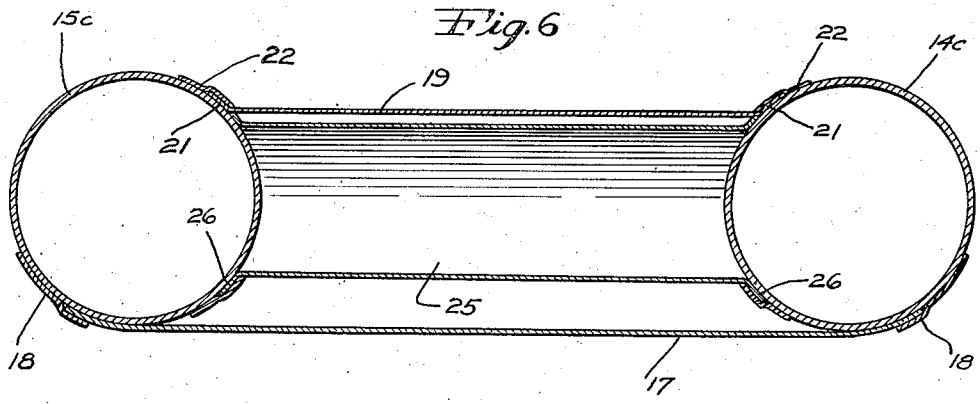


Fig. 7

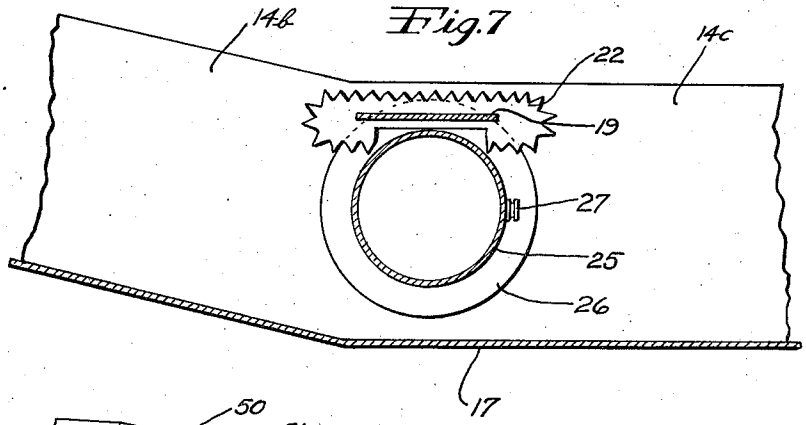


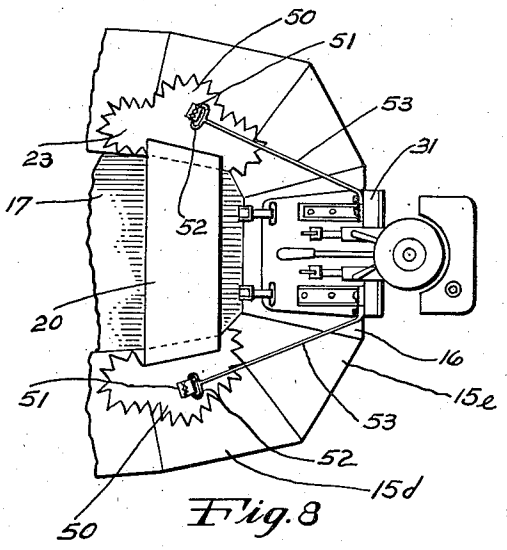


Fig. 8

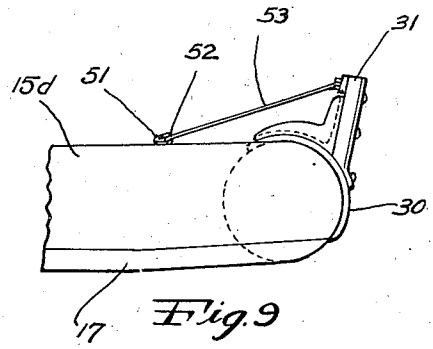


Fig. 9

Inventor

James F. Cooper

By

Attorney

Patented Mar. 14, 1939

2,150,420

# UNITED STATES PATENT OFFICE

2,150,420

## MOTOR MOUNTING FOR INFLATABLE BOATS

James F. Cooper, Akron, Ohio, assignor to Wingfoot Corporation, Wilmington, Del., a corporation of Delaware

Application February 20, 1937, Serial No. 126,822

4 Claims. (Cl. 115—17)

This invention relates to collapsible and portable boats, and it refers particularly to inflatable fabric boats and to novel means for applying outboard motors thereto.

Prior to this invention, inflatable fabric boats have been used by sportsmen, campers, explorers and the like, but they have not met with widest acceptance because they have had to be rowed with oars. When thus propelled, such a boat is slower than some people prefer, and the room required to manipulate the oars reduces the passenger space considerably below the buoyant capacity of the boat. There has been no provision for mounting outboard motors, and hence the use of such boats has been restricted.

In its broad aspect, one of the features of the present invention is the attachment of an outboard motor to a collapsible and portable boat. More specifically, the invention contemplates a motor mounting device which may be quickly and easily attached to and detached from the boat and one which will distribute its weight and that of the motor over a substantial area of the boat fabric whereby to avoid injury thereto. One embodiment of the novel motor mounting comprises a base member appropriately formed to seat upon one of the inflated tubular portions of the boat and an upwardly disposed extension from said base member forming a stern board to which the motor may be secured.

Another feature of the invention is the provision of means for maintaining the shape of the boat in its operative condition with increased carrying capacity and decreased resistance to propulsion. This feature is achieved by use of a pneumatic strut extending transversely in the boat from one side tube to the other in such a way as to resist movement of said tubes toward each other. This pneumatic strut is preferably located at or adjacent to the widest part of the boat, and makes possible a substantial width and a pointed bow.

The foregoing and other objects, features and advantages of the invention will be readily appreciated from the following description in conjunction with the accompanying drawings wherein the invention has been shown by way of example, and wherein

Figure 1 is a top plan view of the improved boat with the novel outboard motor mounting in place;

Fig. 2 is a side elevation thereof;

Fig. 3 is a fragmentary view taken on line 3—3 of Fig. 2;

Fig. 4 is a cross-sectional view taken in line 4—4 of Fig. 3;

Fig. 5 is a fragmentary rear elevation taken on line 5—5 of Fig. 2, but omitting the motor;

Fig. 6 is a transverse sectional view taken on line 6—6 of Fig. 1 on a larger scale;

Fig. 7 is a fragmentary sectional view taken on line 7—7 of Fig. 1;

Fig. 8 is a fragmentary plan view of a modified form of the motor mounting; and

Fig. 9 is a side elevation thereof.

By referring first to Figs. 1 and 2, it will be seen that the boat 10 there shown is equipped at its stern with a motor mounting 11 to which is secured an outboard motor 12 of any ordinary or preferred form. This motor mounting may of course be applied to boats of other specific forms and the boat here shown may be used without the motor if so desired.

The boat 10 comprises a tubular buoyant frame made up of a number of tube sections 14a, 14b, 14c, 14d, 14e, 15a, 15b, 15c, 15d, 15e and 16. These tube sections are formed of air-tight and waterproof flexible material such as rubberized fabric and may be joined together with lapped edges which may be cemented, vulcanized, stitched or otherwise. It is to be noted that the bow sections 14a and 15a mutually converge to a point in plan, and that they are inclined upwardly, whereby to provide minimum resistance to propulsion. The stern tube section 16 is of course transversely disposed and is adapted for the attachment of the motor mounting 11 as will later be explained in detail. It is also to be understood that the tube sections which make up the boat frame are of substantially circular cross-section and sufficiently large to provide adequate buoyancy when inflated. Secured to the lower sides of all of said tube sections and completely filling the space therebetween is a waterproof fabric bottom 17, the detail of which is best shown in Fig. 6. If desired the edges of this bottom 17 may be lapped by securing patches 18 whereby to strengthen the connection between the parts. A pair of canvas strips 19 and 20 extend cross-wise in the boat to provide seats for some of the occupants. The ends of these canvas strips may be cemented, as at 21 (see Fig. 6), to the adjacent portions of the frame tube sections and may be covered by fabric patches 22 and 23 to complete their anchorage.

It is to be noted that the seat strip 19 is disposed at substantially the widest part of the boat and, because of the general flexibility of the entire structure, it is desirable to provide means for

resisting inward movement of the tube sections 14c and 15c when weight is applied to the seat. One way of accomplishing this is by a pneumatic strut 25 which is best shown in Figs. 1, 6 and 7. This pneumatic strut 25 consists of a tube of air-tight and water-proof fabric having its ends 26 flared and secured to the adjacent portions of the frame tube sections 14b, 14c, 15b and 15c. Preferably this pneumatic strut may be separately inflated with air through a valve 27 of any preferred type. Furthermore, this pneumatic strut is disposed directly below the seat 19 and is spaced above the boat bottom 17, whereby the seat is made somewhat more comfortable and the bottom of the boat is entirely clear from stem to stern. Since the pneumatic strut 25 resists transverse collapse of the boat, it makes possible an increase in boat width and thus increases the boat's carrying capacity.

Referring now to the motor mounting 11, it will be seen that this comprises a base plate 30 having an upwardly disposed extension 31. The base plate may preferably be formed of metal and is appropriately curved or otherwise formed to fit snugly upon the tube section 16 of the boat and to distribute its weight to substantial portions thereof. The upward extension 31 constitutes in effect a stern board to which the motor 12 may be detachably secured by the usual clamping devices 32. A pair of relatively spaced L-shaped brackets 33 provide a firm connection between the base plate 30 and the upward extension 31, these parts being relatively connected by rivets, bolts or other suitable fastening means. If desired a thin finishing sheet 34 of metal may also be secured to the base plate 30 and to the rear side of the extension 31 whereby to enhance its appearance, as well as to serve as reenforcement.

The base plate 20 of the motor mounting may be formed in any one of various ways to facilitate its detachable connection to the boat tube section 16. For this purpose the illustrated embodiment of the base plate is provided with slots 35 adjacent its rearward edge and similar slots 36 adjacent its forward edge and these slots are adapted to receive securing straps 37 and 38 which are appropriately mounted upon the boat. Fabric reenforcing patches 40 and 41 may be employed to permanently hold flexible loops 42 and 43 which in turn carry metallic buckles or rings 44 and 45 to which the straps 37 and 38 may be attached. With this or any equivalent construction the motor mounting 11 may very easily and quickly be mounted upon or removed from the boat either to facilitate use of the motor or to permit collapse and folding of the boat for storage or transportation.

In some cases it might be desirable to further distribute the forces of the motor and to further brace the motor mounting and for this purpose a modification, such as shown in Figs. 8 and 9, may be employed. In this form of the invention the patches 23 which are used for securing the seat 20 in position may be formed with extensions 50 providing detachable anchorage 51 for the forward ends 52 of rods 53. These rods 53 are inclined upwardly and inwardly toward the top of the stern board 31 of the motor mounting and are secured thereto by bolts or the like. Thus, when the motor is in operation the thrust will be applied, not only to the buoyancy tube section 16, but also through the rods 53 to the tube sections 14d and 15d.

From the foregoing it will be evident that an improved inflatable fabric boat has been provided and also a novel motor mounting for such boats generally. The boat, motor mounting and motor may be easily transported as separate units and may be quickly assembled for use when desired. A combination of these units is particularly advantageous to campers, sportsmen and tourists with motor-car trailers. Obviously, the several features of the invention may be modified in various ways and the right is herein reserved to make such changes as fall within the scope of the appended claims without departing from the spirit of the invention.

Having thus described the invention, what is claimed is:

1. A removable and portable motor mounting of the class described comprising a base member so formed as to fit snugly upon a substantial area of an inflated tube portion of a fabric boat, and an extension rising from said base member adapted to receive an outboard motor and to hold the same in operative position rearwardly thereof when applied to said inflated tube portion of the boat.

2. A removable and portable motor mounting of the class described comprising a curved base member of substantial area so formed as to fit snugly against and to rest upon an inflated buoyancy tube of a fabric boat, and an upwardly disposed extension on said base member adapted to receive an outboard motor and to hold the same in operative position rearward of said buoyancy tube.

3. A removable and portable motor mounting of the class described comprising a transversely curved base member of substantial area so formed as to fit snugly against and to rest upon an inflated buoyancy tube at the stern of a fabric boat, an upwardly disposed extension on said base member adapted to receive an outboard motor and to hold the same in operative position rearward of said buoyancy tube when applied to a boat, said curved base member being characterized by means to facilitate detachable connection to a boat.

4. A removable and portable motor mounting of the class described comprising a transversely curved metallic base plate of substantial area so formed as to fit snugly against and to rest upon an inflated buoyancy tube at the stern of a fabric boat, and an upwardly extending member rigid with reference to said base plate and adapted to receive an outboard motor and to hold the same in operative position outside of the boat.

JAMES F. COOPER.