No. 619,788. Patented Feb. 21, 1899.

C. POTTER.

CYLINDER PRINTING MACHINE.

(Application filed Apr. 11, 1896.)

(No Model.) 4 Sheets—Sheet 1.

Fig. 1.

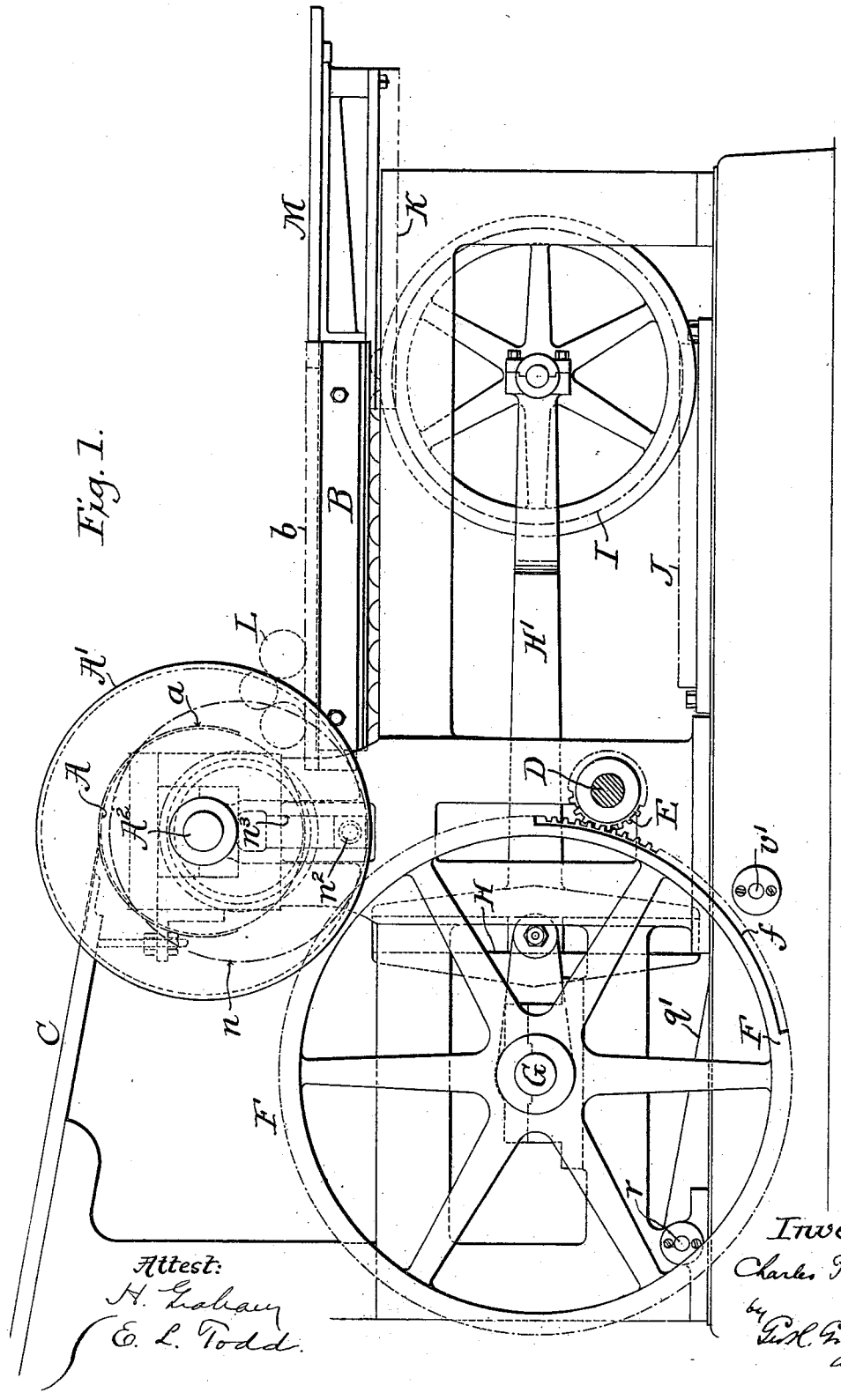

THE NORRIS PETERS CO., PHOTO-LITHO., WASHINGTON, D. C.

No. 619,788. Patented Feb. 21, 1899.

C. POTTER.

CYLINDER PRINTING MACHINE.

(Application filed Apr. 11, 1896

(No Model.) 4 Sheets—Sheet 2.

Fig. 2.

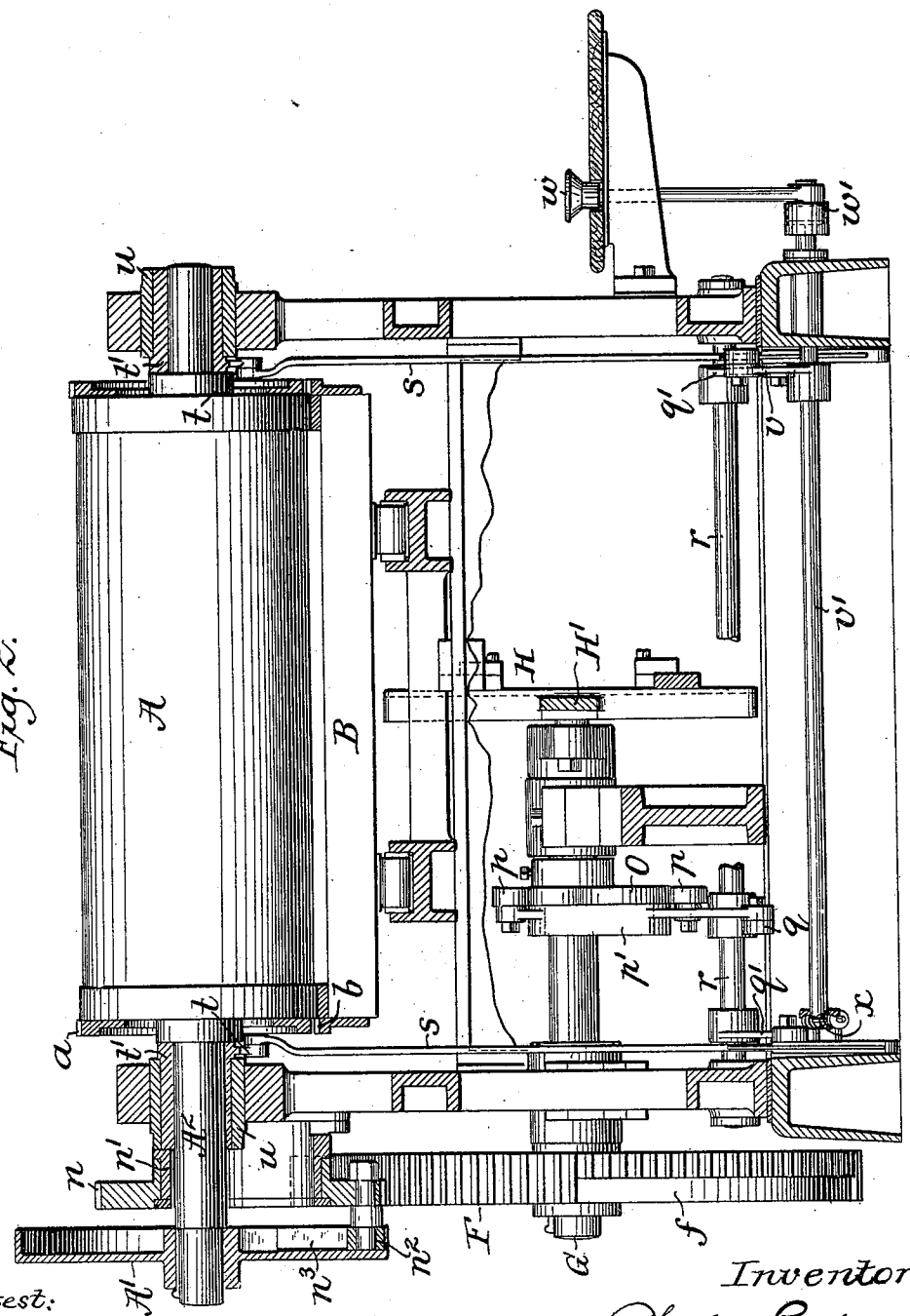

Attest:
H. Graham
E. L. Todd.

Inventor,
Charles. Potter,
by Fred. L. Graham
Atty

THE NORRIS PETERS CO., PHOTO-LITHO., WASHINGTON, D. C.

No. 619,788. Patented Feb. 21, 1899.

C. POTTER.

CYLINDER PRINTING MACHINE.

(Application filed Apr. 11, 1896.)

(No Model.) 4 Sheets—Sheet 3.

Fig. 4.

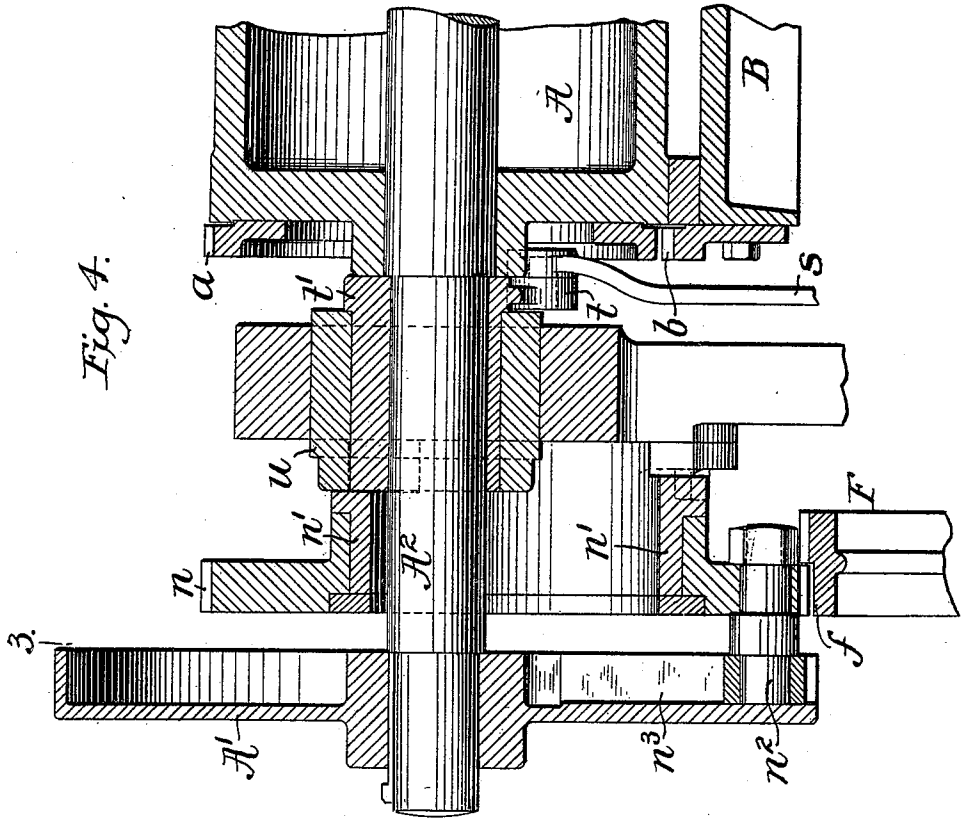

Fig. 3.

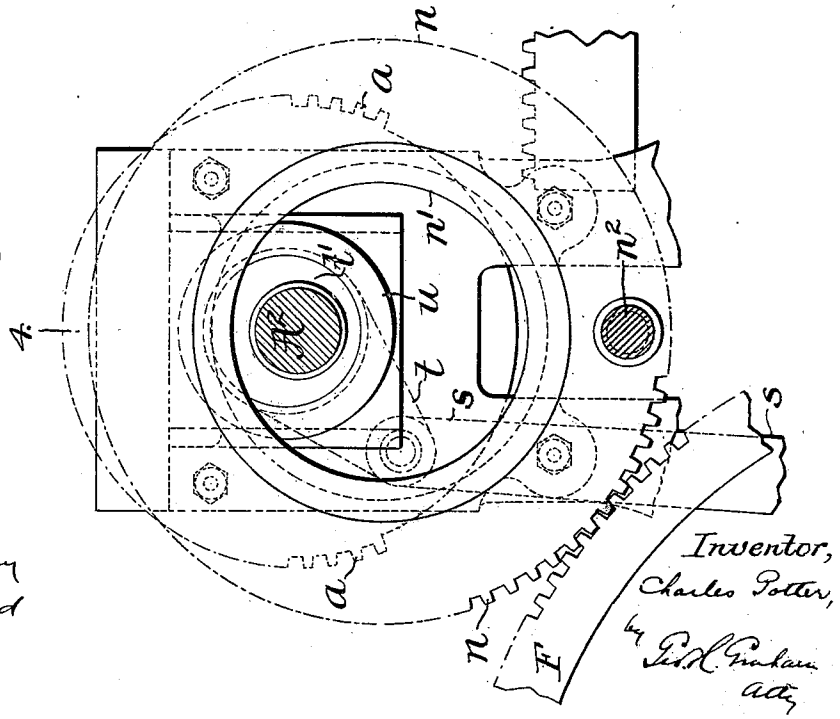

Attest:
H. Graham
E. L. Todd

Inventor,
Charles Potter,
by Geo. C. Graham
Atty

THE NORRIS PETERS CO., PHOTO-LITHO., WASHINGTON, D. C.

No. 619,788. Patented Feb. 21, 1899.

C. POTTER.

CYLINDER PRINTING MACHINE.

(Application filed Apr. 11, 1898.)

(No Model.) 4 Sheets—Sheet 4.

Fig. 6.

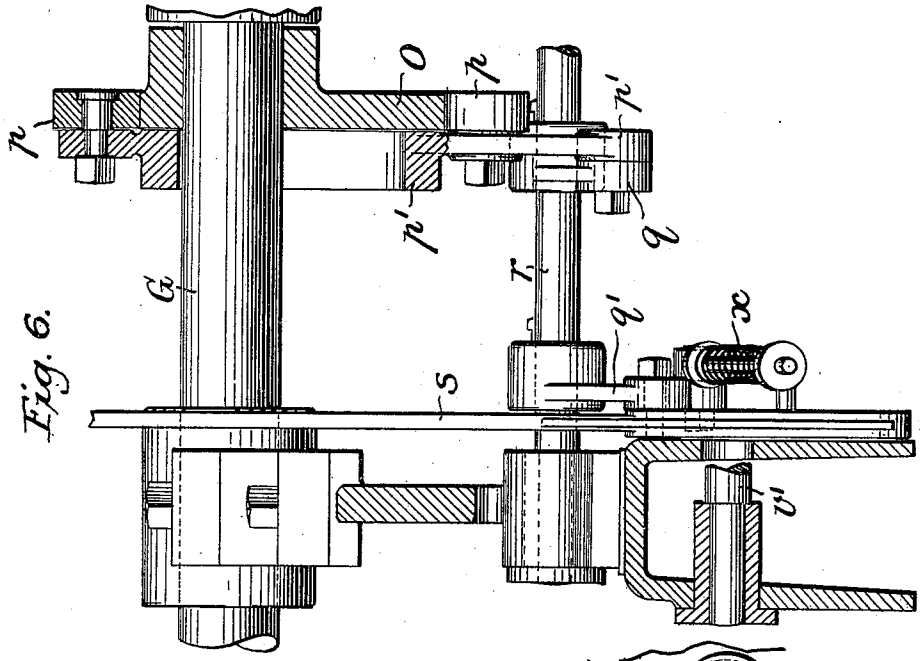

Fig. 5.

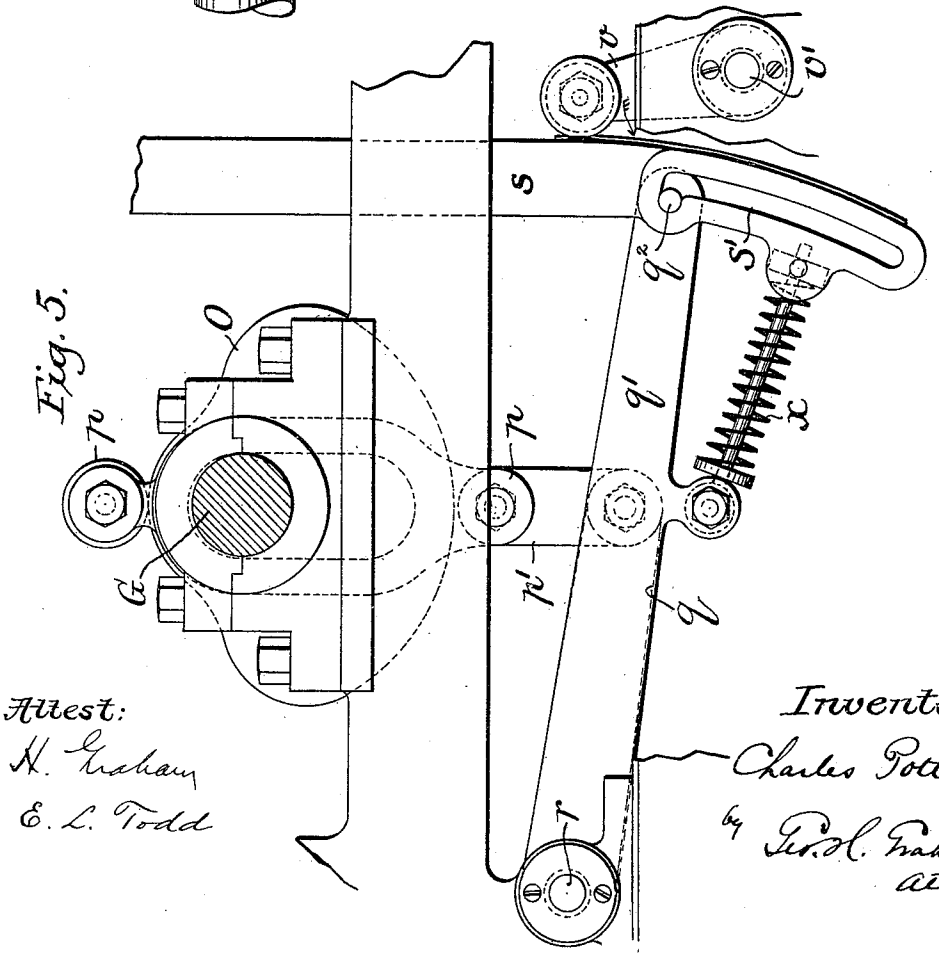

Attest:
H. Graham
E. L. Todd

Inventor,
Charles Potter,
by Geo. L. Graham
atty.

THE NORRIS PETERS CO., PHOTO-LITHO., WASHINGTON, D. C.

UNITED STATES PATENT OFFICE.

CHARLES POTTER, OF PLAINFIELD, NEW JERSEY.

CYLINDER PRINTING-MACHINE.

SPECIFICATION forming part of Letters Patent No. 619,788, dated February 21, 1899.

Application filed April 11, 1896. Serial No. 587,117. (No model.)

To all whom it may concern:

Be it known that I, CHARLES POTTER, a citizen of the United States of America, residing at Plainfield, Union county, and State of New Jersey, have invented certain new and useful Improvements in Cylinder Printing-Machines, of which the following is a specification.

This invention relates generally to printing-machines, and particularly to that class known as "bed-and-cylinder" printing-presses of the two-revolution type; and it has for its object to provide means by which during the act of impression the surface speed of the impression-cylinder is made to conform with that of a coöperating crank-driven type or form bed.

To this end the improvements consist in novel means for driving the cylinder from the motion of the bed during the time of impression and at other times driving the cylinder independent of the bed from any of the usual forms of driven gearing.

They also consist in novel means by which the cylinder is taken under control by the bed and removed from such control while the cylinder and bed are moving at the same surface speed, so that the transference is accomplished smoothly and without jar, and, further, in novel means by which the transference is effected while the cylinder is yet under the control of one of its drivers.

With this general understanding of the nature of the improvements a detailed description thereof will now be given, reference being had to the accompanying drawings, in which—

Figure 1 is a side elevation of the major part of a printing-press embodying the improvements. Fig. 2 is a transverse section of the same, taken vertically through the cylinder-bearings. Fig. 3 is an enlarged sectional elevation on the line 3 of Fig. 4. Fig. 4 is an enlarged section on the line 4 of Fig. 3. Fig. 5 is an enlarged sectional elevation of the lower portion of the cylinder-lifting means with the trip, and Fig. 6 is a transverse sectional elevation of the same.

The printing-machine, referring particularly to Figs. 1 to 4, may be of any of the usual forms embracing an impression-cylinder A, a coöperating form-bed B, a sheet-feed, such as the feed-board C, and any desired form of sheet-delivery. (Not shown.) The parts of the machine receive motion from a driving-shaft D, having a driving-pinion E in mesh with a gear-wheel F. This gear-wheel is fast to the end of a crank-shaft G, the crank-wrist of which in this instance engages the slotted head H of a connecting-rod H', the other end connected with the usual traveling gear I, engaging with a lower fixed rack J and a rack K, secured to the under side of the form-bed B. The form on the bed is inked by the usual ink-rolls L (indicated by dotted lines) in connection with a distributing-table M, carried by the bed.

The gear-wheel F is of double width and in addition to being in constant mesh with its driving-pinion E is formed with a mutilated portion *f* for half its width, so that it may mesh during a portion (the major portion) of each rotation with a gear-wheel *n*, mounted to rotate loosely on a hub *n'*, surrounding but set eccentric to the axis or shaft A^2 of the impression-cylinder A, the said hub being fast to the machine-framing. The wheel F while thus being constantly driven is at times connected with and disconnected from the eccentrically-set wheel *n*.

The wheel *n* carries a stud n^2, that engages with a slot n^3, formed in a disk or other part A', fast to and rotating with the impression-cylinder shaft A^2, so that during the time the cylinder is rotating idly or during its non-impression movements the cylinder is driven from the stud of the eccentrically-set wheel, such wheel then being in mesh with the wheel F, the stud moving along the slot in accommodating itself to the eccentric setting of its wheel *n*.

The impression-cylinder A carries a mutilated gear *a*, adapted to be engaged by a toothed rack *b* on the side of the bed B, the teeth of the gear *a* being so disposed that the cylinder and bed are geared together while the mutilated or blank portion *f* of the wheel F is passing idly below the wheel *n*. The teeth of the gear *a* are also so arranged with respect to the bed-rack *b* that the gear and rack are in mesh before the teeth of the wheel F leave the wheel *n* and remain in mesh until the wheel F again meshes with the wheel *n*, so that the cylinder is always under con-

trol and being rotated. The length of the mutilation or blank f of the wheel F may thus approximate the length of the impression, while the extent of the toothed portion of the cylinder-gear a will be somewhat greater than the length of the impression. So, too, the surface speed of the wheel F, the cylinder A, and bed B will at the times the control of the impression-cylinder is transferred from the wheel F to the bed-rack, and vice versa, be uniform, and thus the transference is effected smoothly and without jar, these uniform speeds occurring near the ends of the motion of the form-bed at either extreme. Of course during the passage of the blank f of the wheel F past the wheel n said wheel n is being rotated from the impression-cylinder through the disk A′ and its stud n^2, and at the time it is to be reëngaged by the wheel F it is also moving at the same surface speed as said wheel F, corresponding with the like speed at such time of the bed and impression-cylinder, as before stated. It will therefore be understood that during the non-impression movement of the impression-cylinder it is driven by and is under the control of the main driving-gearing of the machine, and that during the impression movement the cylinder is driven by and is under the control of the form-bed, or, in fact, of the bed-driving crank, and at the same time, in so far as the driving-gearing is not directly driving the cylinder, it is independent thereof.

The raising and lowering of the impression-cylinder are effected in the present instance by a suitably-shaped cam O, fast to the crank-shaft G, (see Figs. 2, 5, and 6,) said cam being engaged at diametrically opposite points by rolls p of a link p', connected at its lower end to an arm q, projecting from a transverse rock-shaft r, mounted in the opposite side frames of the machine. This rock-shaft near each side frame carries another arm q', having a stud q^2, arranged to engage the lower end of a rod s, the vertical movement of which effects a like movement in the impression-cylinder. In this embodiment of the invention the upper end of each of the rods s, one at each side of the machine, connects with a crank-arm t of an eccentric bushing t', (see Figs. 3 and 4,) in which the cylinder-shaft is journaled, the bushing being in turn seated in the bearing u of said shaft. When the rods s are in their down position, as shown, the cylinder is in the plane of impression, and when the rods are moved upwardly the eccentric bushings are rotated on the journals of the cylinder-shaft to raise the cylinder bodily out of the plane of impression.

In order to enable the cylinder to be left in its raised position for well-known purposes, a trip is introduced to disconnect the motion of the cam from the rods s. This trip consists of two parts, a detachable connection between the vibrating arms q' and the rods s and means for effecting the detachment.

In the present instance the stud q^2 of the arm q' rests upon a shoulder at the upper end of the curved slotted lower end s' of the rod s, and so long as the shoulder and stud engage no lost motion between the arms q' and rods s occurs. As soon, however, as the rods are rocked slightly toward the rock-shaft r the studs leave the shoulders and enter the slotted end s' of each rod, so that the arms q' may vibrate idly, so far as moving the rods is concerned, and the impression-cylinder is thus left in its raised position. This disconnection between the arms and rods is conveniently effected by a rock-arm v, having a roll arranged to bear against the outer side of the rod s, as in Fig. 5, so that when the rock-arm is rocked in the direction of the arrow, when the rod is in its high position, said rod s will be moved inwardly toward the shaft r to bring its slotted end in alinement with the stud of the arm q'. There are two such rock-arms v, one for each rod s, fast to a transverse rock-shaft v', and arranged to be moved by the foot of the pressman through a foot-rod w and arm w', fast to one end of the shaft v'. (See Fig. 2.) The disconnection of the rods s from the arms q' is opposed by a suitably-mounted spring x, interposed between projections on the arm and rod, such spring also serving to reconnect the rod and arm together when the pressman releases the pressure on the foot-rod w and to hold them connected.

I claim—

1. The combination of a suitably-driven form-bed, an impression-cylinder adapted for coöperation therewith, means including an eccentrically-set gear for driving the cylinder independent of the bed, and means for transferring the control of the cylinder from said driving means to the form-bed, as set forth.

2. The combination of a crank-driven form-bed, an impression-cylinder adapted for cooperation therewith, eccentrically-set gearing for driving the cylinder independent of the bed for a portion of its movement and other means for driving the cylinder from the crank of the bed at another portion of its movement, as set forth.

3. The combination of a crank-driven form-bed, an impression-cylinder adapted for cooperation therewith, a mutilated gear and a coöperating eccentrically-set gear for rotating the cylinder during a portion of its movement, and gearing between the cylinder and the bed for driving the cylinder the remainder of its movement, as set forth.

4. The combination of a crank-driven form-bed, an impression-cylinder adapted for cooperation therewith, an eccentrically-set gear connected to the cylinder, a mutilated gear adapted to mesh with said eccentrically-set gear during a portion of the movement of the cylinder, and gearing between the cylinder and bed for driving the cylinder during the remaining portion of its movement, as set forth.

5. The combination of a crank-driven form-

bed, an impression-cylinder adapted to cooperate therewith, mutilated and eccentrically-set gearing for driving the cylinder independent of the bed for a portion of its movement, and other gearing with the bed-driving crank for driving the cylinder the remainder of its movement independent of said mutilated gearing, as set forth.

6. The combination of a crank-driven form-bed, an impression-cylinder adapted to cooperate therewith, means including an eccentrically-set gear for driving the cylinder independent of the bed for a portion of its movement, and means for transferring the control of the said cylinder from said driving means to the form-bed and vice versa while the cylinder and bed are moving at the same surface speed, as set forth.

7. The combination of a crank-driven form-bed, an impression-cylinder adapted to cooperate therewith, means including an eccentrically-set gear for driving the cylinder independent of the bed for a portion of its movement, and means for driving said cylinder from the bed-driving crank during the remainder of its movement said latter means having control of the cylinder before the former means parts with control of said cylinder, as set forth.

8. The combination of a crank-driven form-bed, an impression-cylinder, an eccentrically-set gear, sliding connections between said gear and the cylinder, a mutilated gear adapted to mesh with said eccentrically-set gear during a portion of its rotation, and gearing between the cylinder and bed for driving the cylinder during the remaining portion of the rotation of said gear, as set forth.

In witness whereof I have hereunto signed my name in the presence of two witnesses.

CHARLES POTTER.

Witnesses:
JAMES C. POPE,
H. B. MCDONALD.