Dec. 5, 1939. J. H. WARNER 2,181,984

AMUSEMENT APPARATUS

Filed Aug. 9, 1939 3 Sheets-Sheet 1

Fig. 1.

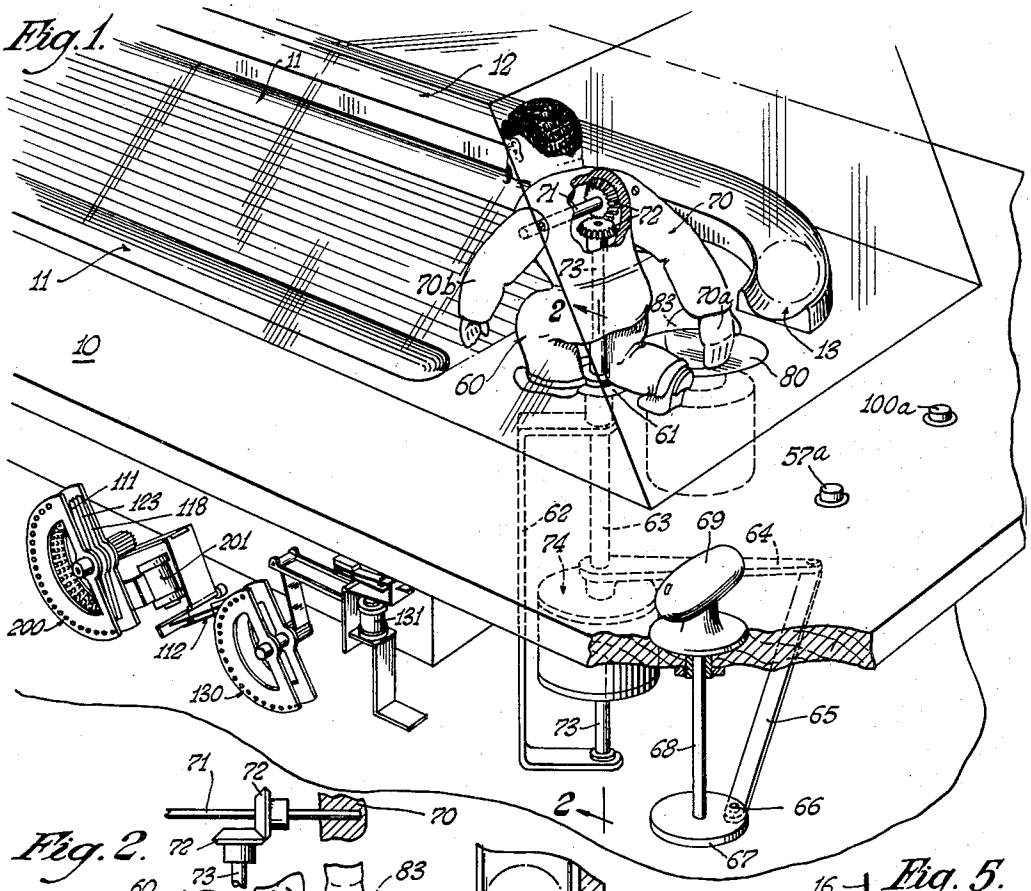

Fig. 2.

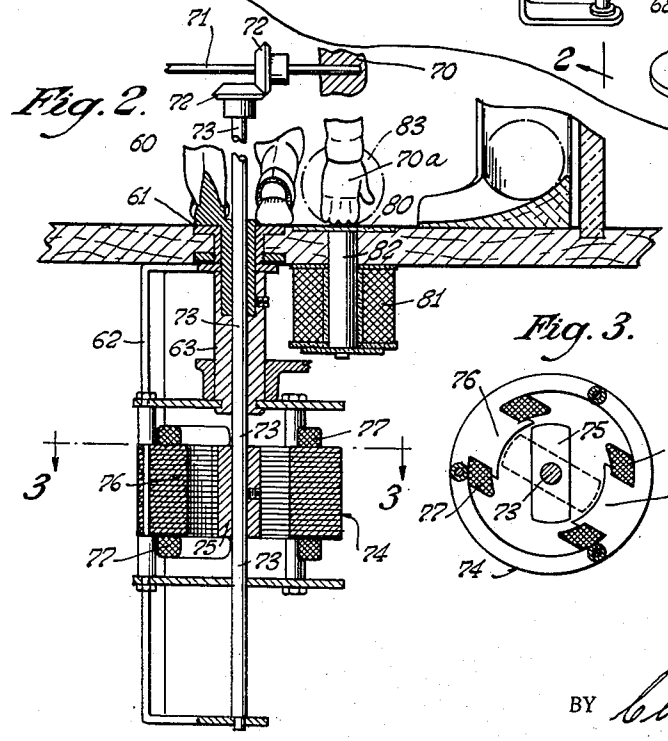

Fig. 3.

Fig. 5.

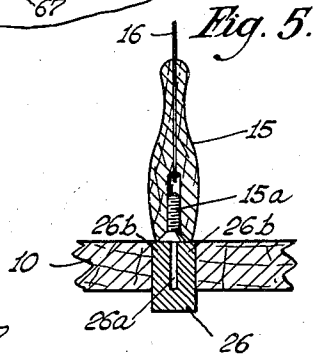

Joe H. Warner
INVENTOR.

BY Clarence E. Threedy
HIS ATTORNEY.

Dec. 5, 1939. J. H. WARNER 2,181,984

AMUSEMENT APPARATUS

Filed Aug. 9, 1939 3 Sheets-Sheet 2

Fig. 4.

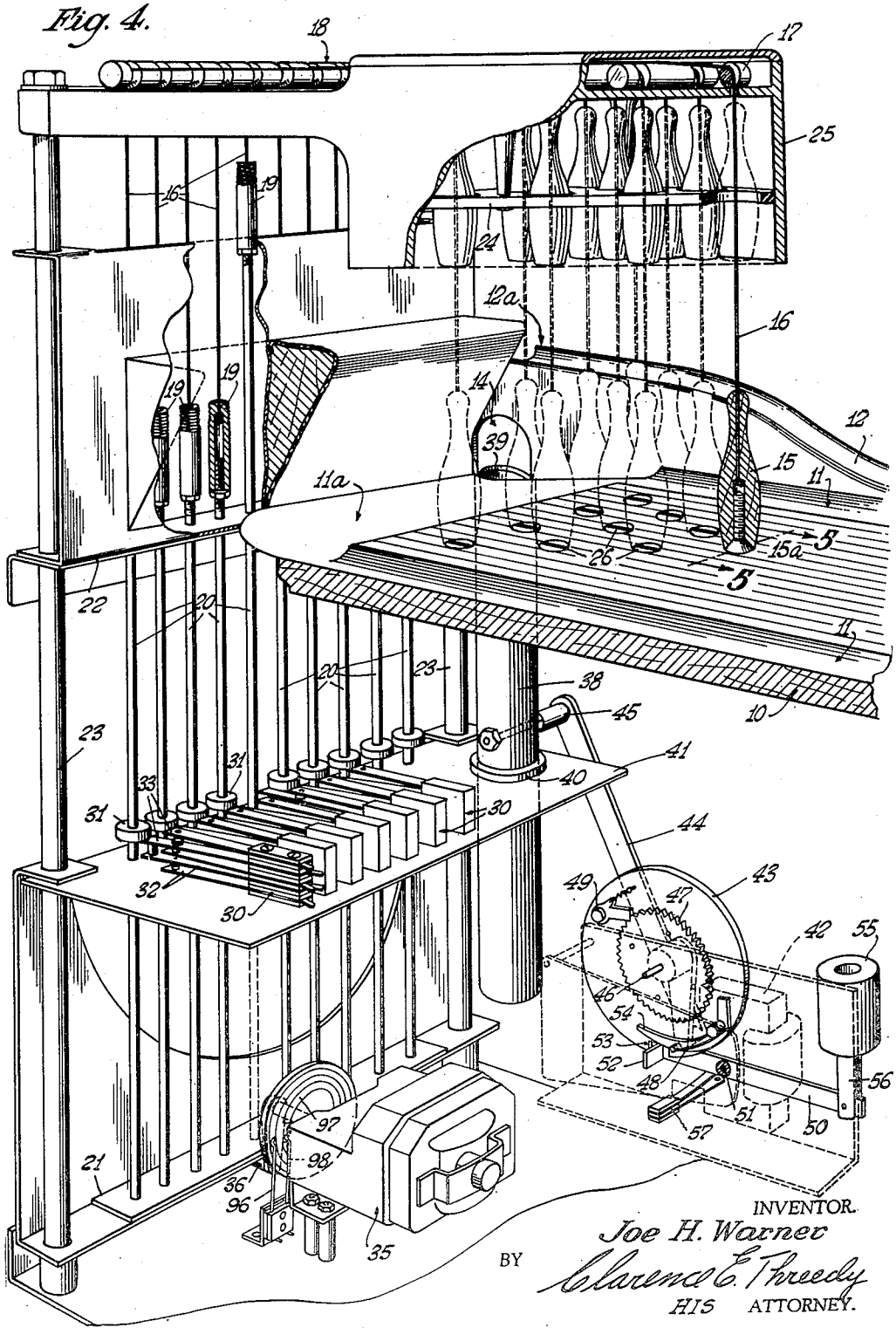

INVENTOR.
Joe H. Warner
BY Clarence E. Threedy
HIS ATTORNEY.

Dec. 5, 1939. J. H. WARNER 2,181,984

AMUSEMENT APPARATUS

Filed Aug. 9, 1939 3 Sheets-Sheet 3

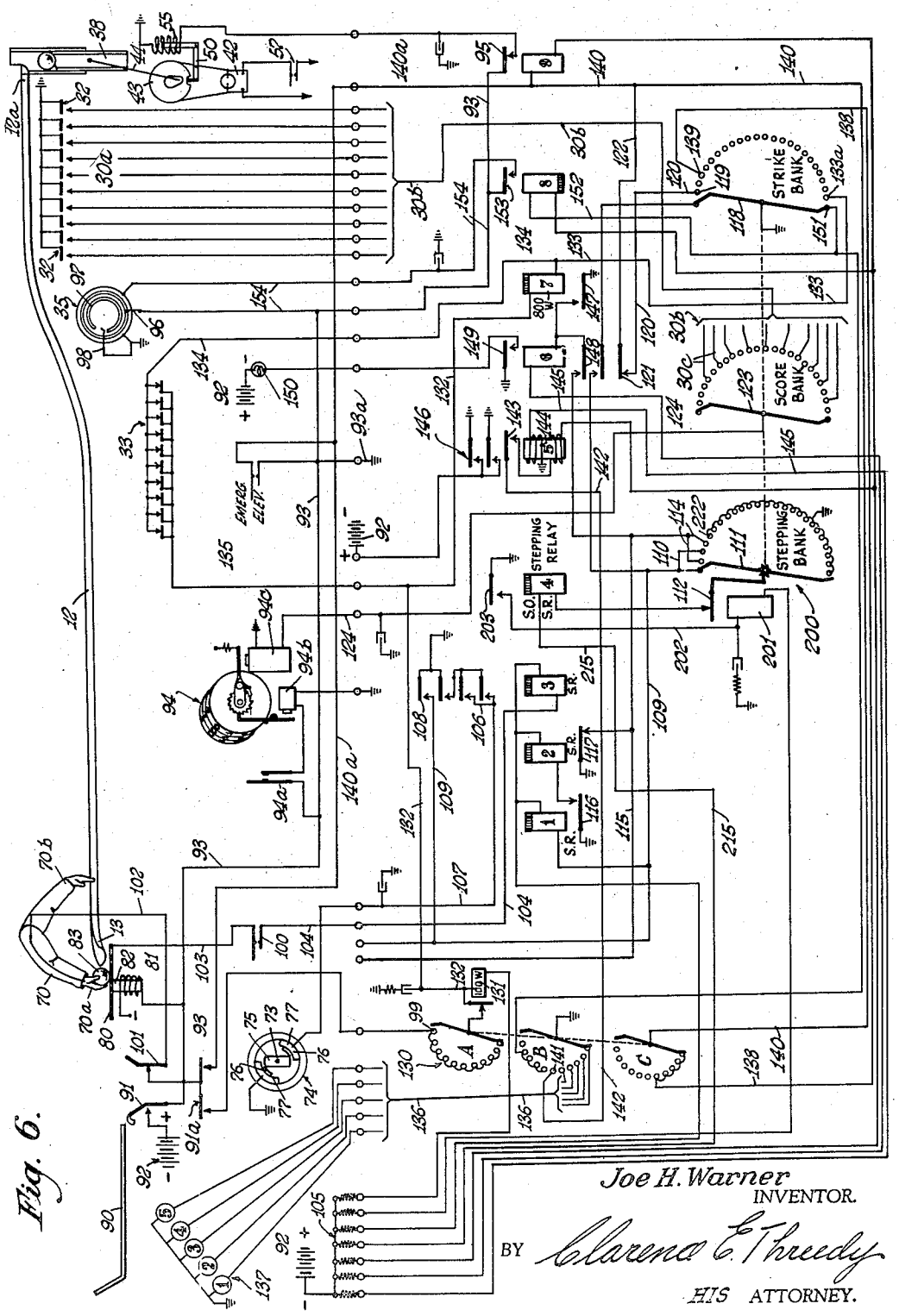

Fig. 6.

Joe H. Warner
INVENTOR.

BY Clarence E. Threedy
HIS ATTORNEY.

Patented Dec. 5, 1939 2,181,984

UNITED STATES PATENT OFFICE

2,181,984

AMUSEMENT APPARATUS

Joe H. Warner, Chicago, Ill., assignor to Duane W. Price, Chicago, Ill.

Application August 9, 1939, Serial No. 289,153

5 Claims. (Cl. 273—38)

This invention relates to amusement apparatus and has as its principal object the provision of improvements in a miniature bowling game adapted for coin-controlled operation.

More particular objects are the provision in a simulated bowling game of means for automatically spotting the pins in the alley, score control means actuated by the several pins, a manikin or figurine arranged to propel the bowling ball at the pins, and mechanism for returning a ball to the manikin and accurately positioning the ball for propulsion by the manikin.

Still other objects relate to the provision of means for adjusting the position of the manikin to predetermine the course of the ball, and a novel mechanism for actuating the manikin to propel the ball, and control mechanism including circuit connections and mechanisms controlled thereby for indicating the player's score, indicating the number of frames played upon each coin-controlled operation of the machine, and actuating certain automatic ball return mechanisms.

Other objects and novel aspects of the invention reside in the various details of construction, as well as the arrangement and mode of operation of the parts of the illustrative embodiment described in detail herein, all of which will become more apparent as the description proceeds in view of the annexed drawings, in which:

Fig. 1 is a fragmentary perspective of the playing end of the alley showing a portion of the ball return, ball positioning means, and the manikin and adjusting means therefor;

Fig. 2 is a fragmentary vertical section along line 2—2 of Fig. 1 showing particularly the ball positioning means and actuating motor for the manikin;

Fig. 3 is a horizontal section through the manikin motor, looking down along line 3—3 of Fig. 2;

Fig. 4 is an enlarged perspective of the pin setting and ball feeding mechanism;

Fig. 5 is a vertical sectional detail through one of the ten pins and magnetic spotting means therefor;

Fig. 6 is a circuit diagram.

General Statement of Operation

In its broader aspects, the invention is arranged for control by a conventional type of coin slide which is liberated for actuation by deposit of a suitable coin and when actuated operates certain electrical control mechanism to condition the game for play, such conditioning including the restoration of the score and frame indicating devices to a normal condition, the resetting or spotting of the ten pins at the end of the alley, and the delivery of a ball to the manikin. The player having actuated the coin slide for the purpose aforesaid, may adjust the manikin to predetermine the course of the bowling ball subsequently to be projected and, being satisfied with such adjustment, the player pushes a control button which actuates the manikin and propels the ball vigorously down the alley against the ten pins. The pins are individually held in their proper positions by magnetic means, the force of attraction of which is momentarily broken when any pin is struck, and each pin is connected with an overhead cable provided with a counterweight which automatically lifts the pin from the alley when the same is struck and the magnetic attraction broken as aforesaid, means being automatically actuated to effect delivery of the second or so-called spare ball to the manikin.

Individual score control means is associated with each pin to condition a counting switch which is operated after every second or spare ball, there being also a frame indicating means which is actuated automatically after every second ball until five frames have been played, as in the usual bowling game. After the fifth frame has been played, or after a predetermined period of time has elapsed without the playing of five frames, a master control circuit is broken and the game cannot be further played unless another coin is deposited.

The alley

Referring to Fig. 1, the bowling alley is arranged on a horizontal panel 10 and is provided along its sides with gutters 11 and along the one side with a ball return runway 12 which is inclined toward the front (right-hand end) of the board and terminates at a discharge end 13 opposite the manikin. As seen in Fig. 4, the gutter 11 extends all of the way to the rear (left-hand extremity) of the alley and joins a transversely extending section 11*a* leading into a ball exit 14. In the event that a player should adjust the manikin so that a ball is projected off the alley and into the gutter 11, such ball would be delivered into the transverse section 11*a* and into the exit 14 for movement by elevating mechanism into the delivery runway 12.

The pin spotting and indicator control means

As seen in Fig. 4, each of the ten pins 15 is

suspended from a cable 16 running over overhead supports 17 and 18 for connection with an adjustable counterweight member 19 connected to a corresponding restoring rod 20. The rods 20 are shiftably supported in vertical alignment in a vertical frame structure including a lower vertically shiftable cross member 21 underlying the lower ends of the rods but unattached thereto, and an upper stationary guide or cross member 22 mounted on a pair of upright frame posts 23.

By shifting the lower rod support 21 upwardly from its normally lowered position, the entire group of rods 20 is raised along with the corresponding counterweight members 19, with a consequent lowering of the cable members 16 and each of the associated ten pins, so that the latter may thus be lowered from the raised positions shown in full lines into the normally lowered positions shown in dotted lines, there being a rack member 24 provided within a triangular shell 25 supported from the frame posts and which rack member is provided with a plurality of holes into which the several pins fit when in raised position, the pins being shielded from view by the member 25.

Pin spotting magnets

Means for accurately spotting the several pins in the customary triangular array includes the provision in the bottom of each pin of a magnetically attractable element such as the screws 15*a* (Fig. 5 also) which are fitted flush into the bottom of the pins and which are attracted by individual permanent magnets 26 seated in the alley flush with the surface of the latter so that the pins will stand perfectly erect when in lowered position, the individual cables 16 of each pin being centered with respect to the corresponding magnets 26 thereof. The permanent magnets 26 may be in the form of rod stock having suitable magnetic properties, slotted as at 26*a* to provide poles 26*b* and permanently magnetized for the purpose set forth.

As a result of the foregoing construction, each pin is attracted to its corresponding magnet 26 upon being lowered from raised position responsive to upward shifting of the assembly of rods 20.

The attraction between the individual magnets 26 and their corresponding screws in the several pins, is strong enough to maintain the corresponding counterweight and rod structure 19—20 of the several pins in raised position, it being pointed out again that the several rods are not attached to the lower cross member 21, but merely rest thereon. However, when any pin is struck an appreciable blow by the ball, the momentary dislodgement thereof is adequate to break the attraction between the screw therein and the corresponding magnet, so that the corresponding counterweight may fall and quickly raise the pin into the rack 24.

Pin switches

The score indicating means includes a leaf spring or "jack" type of switch 30 associated with each of the pin rods 20 and operably controlled by the latter by means of individual collars 31 rigid on the rods and positioned to overlie the extending leaf spring assembly of the corresponding switch so that when the individual rods are in lowered position the jointly movable spring assembly of the corresponding switch will be depressed to affect certain circuit connections hereinafter to be described, it being observed for the present that each of the switches 30 includes a pair of normally open contact springs 32 and a pair of normally closed contact springs 33. Thus, the striking of any pin causes the same to be released from its magnetic holding means and permits the corresponding rod 20 to drop, thus depressing the jointly movable springs of the corresponding switch to close contacts 32 and open contacts 33, which will result in the totalizing or indicating of a score after each second or spare ball is bowled.

Pin resetting and ball return means

When one or more of the pins has been struck and raised from the alley in the manner aforesaid, the corresponding counterweight rod 20 will drop against the lower cross member 21, and in order to restore such pins there is provided a motor 35 (Fig. 4) having a crank 36 underlying the cross member 21 and revoluble in cycles by the motor to raise the member 21 and thus lift any of the rods 20 which may be in lowered condition, thereby restoring the corresponding pin to lowered position in the alley. The motor 35 is controlled by circuit connections hereinafter to be described.

Supported on the frame structure for the pin resetting mechanism is a vertical tube 38 having an open upper end 39 situated opposite the terminus of the transverse ball return runway 11*a* to receive balls from the latter, the diameter of the upper end 39 of the tube being slightly less than that of the bowling balls, so that the latter will seat therein upon leaving the lower end of the runway 11*a*. The tube 38 is shiftable vertically in a suitable collar 40 fixed to a horizontal shelf 41 supported by the frame post 23 and supporting the several indicator control switches 30.

Ball elevation

Means for shifting the elevating tube 38 from its normally lowered position seen in Fig. 4, to raised position wherein the mouth 39 and a ball thereon will be disposed opposite the open upper end 12*a* of the ball delivery runway, includes a motor 42 arranged to rotate a disc 43 having eccentrically connected thereto an elevator operating arm 44 pivotally connected as at 45 to the tube and effective to reciprocate the latter once for each revolution of the disc. The disc is normally disconnected from driving relation with the motor 42 since it is arranged to float on a shaft 46 independently of a gear 47 rotated by the motor 42, the disc having mounted thereon a clutch pawl 48 normally urged by a spring into engagement with the teeth of the gear 47 so as to cause the disc to rotate with the gear when the clutch pawl is freed for movement, relative retrograde movement between the disc and driving gear being prevented by action of a dog 49 on the disc and engaging the teeth of the gear so as to permit the latter to move in only one direction relative to the dog. The clutch pawl 48 is normally held out of clutching engagement with the gear by means of a latch arm 50 pivoted on the motor support as at 51 and having an offset end portion 52 normally urged into a notch 53 in the disc so as to bear against the tail 54 of the clutch pawl and hold the latter against the tension of its spring away from the gear 47. In this condition, operation of the motor will not effect rotation of the disc.

The latch arm 50 is adapted to be tripped from the normal position shown in Fig. 4 by action of a solenoid 55, the plunger 56 of which is piv-

otally connected to the arm **50**. Energization of the solenoid rocks the latch arm to withdraw the offset locking nose **52** thereof from the notch **53** in the disc and also from engagement with the tail of the clutch pawl so that the latter may move into clutching engagement with the driving gear and thus begin rotation of the disc. Subsequent deenergization of the solenoid **55** is of no effect, since the offset nose portion **52** of the latch arm rides on the periphery of the disc until the latter has made a complete revolution, restoring notch **53** opposite the nose of the latch arm and also causing the tail of the pawl to ride onto the offset of the latch arm and release the clutch to stop the disc at a predetermined position regardless of the override of the motor.

Power to the winding of the motor **42** is connected through a normally open "jack" type switch **57**, the contact springs of which are situated to be brought into closed circuit relation by engagement with the latch arm **50** when the latter is rocked responsive to energization of the operating solenoid.

The ball seat at the open upper end **39** of the elevating tube is pitched forwardly and works in a vertical guide-well (not seen), so that the ball is retained thereon during upward movement of the elevating tube until it is brought into alignment with the receiving end **12***a* of the delivery runway, whereupon the ball automatically gravitates into the runway for return to the manikin.

In the event a ball is not delivered to the manikin, there is provided an emergency elevator switch **57***b* which is manually operable by push button **57***a*.

The manikin and ball projecting means

As seen in Figs. 1 and 2, the bowling ball is propelled along the alley by a manikin including a suitable figure **60** mounted for adjusting movement about a vertical axis by means of a sleeve **61** seated in suitable bearings in the panel **10** and passing beneath the latter for rigid connection with a bracket **62** secured to a tubular shaft **63** having rigid connection with a bell crank **64** linked by a member **65** with a manual control including the eccentric pivotal connection **66** of the link **65** with a disc **67** rotated by a shaft **68** connected with a manual control **69** accessible to the player. By turning the handle **69** in opposite directions, the figurine or manikin can be pivoted into desired positions to direct the ball accurately in a desired manner at the tenpins.

Means associated with the manikin for propelling the ball, includes the provision of a limb or arm **70** mounted jointly with a companion arm **70***b* on a stud shaft **71** in the manikin and drivingly connected by means of pinions **72** with a shaft **73** extending through the tubular shaft **63** and into an oscillatory motor generally indicated at **74** and shown in sectional detail in Fig. 2. This motor includes an armature **75** (Fig. 3 also) rigidly secured to the shaft **73** and positioned in the field of a pair of magnetic poles **76** magnetized by a winding **77**. The weight of the arm **70***b* is calculated to dispose the other arm **70** in normal position to receive and propel the ball, with a consequent rocking of the shaft **73** to move the armature **75** out of alignment with the poles **76**, as illustrated in Fig. 3, energization of winding **77** vigorously turning the armature into the dotted line position with a consequent raising or forward movement of the manikin's arm to project a ball disposed opposite the hand **70***a*.

Ball spotting and circuit control means

In order to assure reliable and accurate operation of the machine so far as the playing of the game is concerned, it is necessary that the bowling ball be accurately positioned before the hand **70***a* of the manikin, and to this end the balls used are magnetically attractable and are accurately spotted or located and held by magnetic means in front of the manikin's hand on a plate **80** of conductive metal, such as brass, mounted flush with the surface of the panel **10** opposite the discharge end **13** of the delivery runway.

Magnetic means for positioning the ball on the plate **80**, includes a magnet **81** situated beneath the plate **80** and having a pole piece **82** (Fig. 6 also) situated a little behind center of the plate **80** so that the magnetic ball **83** will constantly be drawn firmly against the hand **70***a* while magnet **81** is energized. Thus, as the ball **83** leaves the end **13** of the delivery runway, it will be positively drawn into the field of the pole pieces **82** and disposed always in the same position relative to the hand of the manikin.

The balls **83**, in addition to being magnetically attractable, are also electro-conductive, as is the plate **80**, and as will appear hereinafter in the description of the circuit connections the ball **83**, when spotted on the plate **80**, is adapted to close a control circuit through the metallic arm and body portions of the manikin and the plate **80**.

The hand **70***a* is preferably constructed of iron so as to increase the field of force above the plate **80**; the remainder of the figure may be cast from aluminum.

DETAILED OPERATION AND CIRCUIT CONNECTIONS

Coin-slide control and master switch

As shown in Fig. 6, the principal control over the apparatus is exercised by a suitable coin testing device including, for example, the familiar reciprocable coin slide **90** of the type which is freed for reciprocation upon deposit of a suitable coin in the pocket therein. Such a coin slide is shown, for example, in United States Patent No. 2,153,183.

Inward movement of the slide **90**, following deposit of a proper coin therein, momentarily closes a master switch **91** connecting battery **92** to conductor **93**. The coin slide also closes a totalizer restoring switch **94***a* to energize a totalizer release magnet **94***b* for restoring the scoring totalizer **94** to zero preparatory to the playing of a new game or "line."

Operation of the coin slide initiates one cycle of operation of the pin resetting motor **35** by putting battery momentarily on the normal starting commutator contact **96** arranged to keep the motor going long enough so that the commutator ring **97** may rotate into engagement with a sustaining contact **98** which will keep the motor power circuit closed until one revolution of the commutator **97** and pin resetting crank **36** has been completed, whereupon an interruption in the ring **97** breaks the motor circuit at starting position.

The coin slide also closes master switch contacts **91***a* placing battery on all contacts **99** of a "frame" counting switch **130** to cause the latter to return to starting position in the event a player has left his game unfinished. Master switch contacts **91***a* also energize relay No. **9** via conductor

140a to operate elevator control solenoid 55 and effect delivery of a ball to the manikin.

Simultaneously with the elevation and delivery of a ball, the ball spotting magnet 81 is energized to attract the newly delivered ball from runway 12 since battery is now connected for the duration of the game to conductor 93 by the differential relay No. 5. Power is also connected to the bowling switch 100 via an interruptor switch 101 and a circuit 102 completed through the arm 70 and hand 70a of the manikin, and the ball spotting plate 80 and conductors 103 and 104 through the winding of a pitching relay No. 3 and a conductor to the resistance bank 105 and back to battery.

The main power circuit thereafter is under control of differential relay No. 5, whose operating winding 144 is energized by the master switch 91 in the first instance to hold the relay operated and locked for the duration of the game and until the differential winding is energized, as will be explained. It is emphasized that as soon as relay No. 5 pulls up, battery is connected by contacts 146 to ground from which all circuits thereafter derive their power.

It should be noted that when the coin slide is initially pushed in to close the master switch, it also momentarily opens the interruptor switch 101 to cut off power from the bowling switch so that the coin slide cannot be held in for repeated operation of the game with only one coin. The game will therefore be in condition for playing only when the coin slide is retracted.

Ball projection

Having operated the coin slide with the consequent operations of the various control means as aforesaid, the game is ready for play, and it may be assumed that the patron adjusts the manikin-positioning handle 69, and is ready to bowl the ball, whereupon he depresses the button 100a (Fig. 1) operating the bowling switch 100. This operates relay No. 3 whose contacts 106 connect power via conductor 107 to energize the winding 77 of the pitching or bowling motor 74, which in turn swings the arm of the manikin vigorously forward and propels the ball at the tenpins.

Such of the tenpins as are struck are dislodged from the holding influence of their respective magnets 26, so that the corresponding counterweight means and rods 20 drop, raising the pin from the alley and operating the corresponding indicator control switches 30 to close the normally open pair of contacts 32 and open contacts 33, whereupon the scoring mechanism is initially conditioned for subsequent actuation to operate the totalizer.

In the usual bowling game, if the first ball knocks down all of the pins, this constitutes a "strike"; but if some of the pins are left standing but are subsequently knocked down by the second or "spare" ball, this latter bowling of the remaining pins constitutes a "spare".

Score means for individual pins

To condition the totalizer for indication of the score resulting from the striking of one or more individual tenpins, each pair of normally open contacts 32 of the indicator switches 30 is connected by conductors 30a through a plug-in cable 30b to an alternate contact 30c on one bank of scoring contacts of a stepping switch 200 operated by a combination slow-operating and slow-release relay and a stepping magnet No. 4. Thus, operation of any indicator switch 30 by knocking over a tenpin, places battery on the corresponding score bank contact in the stepping switch, but no indication is given by the totalizer at this time.

Totalizing circuit

The score of individual hits will not be totalized until after the projection of the second or spare ball, this being accomplished in conjunction with the operation of No. 3 relay, when the bowling switch is operated to project the first ball. Contacts 108 of this relay connect battery from ground via conductor 109 to the first and third starting contacts 110 on the bank of stepping contacts in the stepping switch, and this battery is connected through wiper 111 and relay contacts 112 to No. 4 magnet which operates to energize the magnet 201 to operate the stepping mechanism via circuit 202 and relay switch 203, thus shifting wiper 111 over to the second starting contact 114 (also looped with the fourth contact), the return circuit for No. 4 magnet being through conductor 215 to the resistance bank and back to the battery or power source.

Thus relay No. 3 and stepping relay magnet No. 4 pull up together; and at the same time relays No. 1 and No. 2 pull up, relay No. 1 receiving battery from conductor 109 and transferring the same via its contacts 116 to relay No. 2.

It is important to observe that magnets Nos. 1 2 and 3 are of the slow-to-release type, while No. 4 is both slow to operate and slow to release, in consequence of which the projected ball has time to be well on the way before the stepping switch first operates, and moreover, No. 4 will not fall back until Nos. 1, 2 and 3 have released. As soon as wiper 111 reaches the second contact 114, the switch automatically steps again because when relay No. 2 falls back its contact 117 connects battery to lead 115 (in lieu of relay No. 3). Thus, wiper 111 arrives at the third contact 110 where it rests until the player again pushes the bowling button to cause relays No. 1 to 4 to pull up again in the same manner.

Delivery of spare ball

Meanwhile, the second or spare ball will have been delivered to the manikin as a result of the movement of the wiper 118 of the "strike bank" of contacts jointly with wiper 111. When the stepping switch is impulsed for the first two steps, wiper 118 transiently engages strike bank contact 119, connecting via conductor 120 with normally closed contacts 121 of relay No. 6, and thence via conductor 122 to relay No. 9 which operates to again energize the ball elevating solenoid 55. Wiper 118 thereafter stops on the third contact of the "strike bank" which is dead. The function of the strike bank contacts will appear later.

Second or spare ball projection

When the player pushes the bowling switch for the second time, the stepping switch is again stepped because its wiper 111 is resting on the third starting contact which receives battery through the second operation of relay No. 3, thus moving wiper 111 onto the fourth starting contact 114 which is energized when relay No. 2 falls back the second time, so that the wiper moves automatically to the fifth contact 222 which, together with all remaining contacts, is grounded. As a result, the switch continues to step all the way around to move the wiper into starting position relative to the first contact 110.

Totalizing

When the stepping switch starts repeated automatic operation, the wiper 123 for the "score

bank" contacts transiently engages the various contacts connected through cable 30b to the several indicator switches 30, it being remembered that whenever a pin is struck, the corresponding indicator switch is held in operated condition to maintain battery on the corresponding score bank contacts.

Thus, battery will be successively applied to the wiper 123 as it steps around, impulsing the totalizer magnet 94c via conductor 124 a number of times depending on the number of pins struck.

Frame and strike counting

The machine is preferably set to permit the playing of five "frames", and therefore the ball may be projected ten times (two for each frame). Since each group of two balls constitutes one "frame" means is provided for indicating the number of frames played and automatically shutting off the power when a total of five frames has been played, or after a lapse of time. This means includes a second stepping switch generally indicated at 130 and, like the first stepping switch, includes three banks of contacts and three wipers.

The stepping magnet 131 is impulsed through a conductor 132 in series with the winding of No. 7 relay which in turn receives battery via conductor 133 from the next to the last contact 133a on the "strike bank" of the first stepping switch, so that each time wiper 118 of the latter moves around as aforesaid, following projection of the second or spare ball, relay No. 7 is impulsed.

It is important to note, however, that the terminals of relay No. 7 are normally shunted through conductors 134 and 135 by all of the normally closed contacts 33 of the counterweight switches, so that unless all of the tenpins have been struck (with a consequent opening of all switch contacts 33), relay No. 7 will not pull up after the second ball is projected.

The shunted impulse or battery is, however, passed on to the stepping magnet 131, returning through the resistance bank, so that wiper A contacts the first (dead) contact on the corresponding bank.

Wiper B normally contacts the first contact on its bank and places battery from ground, via a plug-in cable 136 on the No. 1 lamp of the group of five frame lamps 137, causing this lamp to be illuminated when the coin slide is first operated to indicate to the player that he is playing the first frame.

As wipers A and B make the first step, wiper C does the same, engaging the first of five looped contacts on its bank and connected by conductor 138 to the fourth contact 139 on the strike bank of the first stepping switch. Wiper C is connected by conductor 140 to conductor 122 and hence to contacts 121 of relay No. 6; it is also connected to the winding of relay No. 9 which controls the elevator circuit. This first step causes wiper B to illuminate frame indicating lamp No. 2.

Thus, the bowling of every second ball results in operation of the frame counting switch and illumination of the appropriate frame counting lamps 137. When the tenth ball is projected, wiper C moves off the last contact and breaks the power circuit for the elevator control relay No. 9, so that no more balls will be delivered.

At the same time, wiper B engages contact 141 and via conductor 142 places battery on the reverse winding of the differentially wound relay No. 5 through the closed contacts 143 of the latter which are closed because the main winding 144 is constantly energized while the game is in play via ground and conductor 145 to the resistance bank. As a result, differential relay No. 5 releases, thus cutting off the main power connection to ground through its contacts 146, with a consequent cutting off of further play unless the coin switch 91 is again operated.

Strike scoring

Should the player make a "strike" and knock down all of the pins during any frame, it will be understood that all of the normally closed contacts 33 of the counterweight switches would be opened, and in this event the heretofore mentioned shunt around the winding of No. 7 relay would be opened so that when the first or totalizer stepping switch moves after playing of any "spare" ball, relay No. 7 would be pulled up, placing battery from ground through its contacts 147 on the contacts 148 of relay No. 6 and also energizing the latter, with two results: first, contacts 149 complete circuit for the strike indicating lamp 150, which is illuminated; second, the starting contacts 110 on the stepping bank are energized and cause the totalizer stepping switch to move one additional step instead of stopping in the usual starting position on the first contact 110 after making a complete rotation.

The totalizer switch steps no farther because in the preceding rotation, the pins were reset, thus restoring the shunt around relay No. 7, which causes the latter to fall back and remove battery from starting contacts 114 on the stepping switch.

In this manner, a free play is afforded the player in reward of the strike, it being important to observe, however, that operation of the frame counting switch 130 must be prevented if the delivery of the free ball is not to be deducted from the ten plays permitted by the frame counting switch. This is done by connecting the stepping magnet 131 for the frame counting switch in series with the winding of relay No. 7, which has a considerably higher resistance (800 w.) than winding 131 (100 w.), with the result that when a "strike" lifts the shunt from relay No. 7, the latter operates, but stepping magnet 131 does not because it does not receive enough current through the higher resistance winding of No. 7 relay.

In the event that the player leaves the game without using the ten balls, it is contemplated that the power circuit maintained by differential relay No. 5 may be broken by a suitable time-delay switch in series with the main power connection thereof to the battery or other power source 92.

SUMMARIZED STATEMENT OF OPERATION

Operation of the coin slide 90 closes master switch 91—91a which resets the totalizer 94, starts the resetting motor 35, impulses the ball-elevator control solenoid 55, closes the master differential relay No. 5 to set up the operating power circuit, and also steps the frame counting rotary switch 130 back to normal (if any player has left prior to completing a game). The ball spotting magnet 82 is also energized.

The player pushes switch 100—100a the first time, operating relay No. 3 which actuates the projecting motor 74 and also relays Nos. 1 and

2; No. 2 relay starts the totalizer stepping switch to first position.

If some, but not all, pins are knocked down, the corresponding counterweight switches 30—32 are operated to put battery on certain score bank contacts.

When the second or spare ball is projected by operating bowling switch 100—100*a* the second time, relays Nos. 1, 2 and 3 operate as before to shift the totalizer stepping switch to the next starting contact, whereupon it begins to step automatically through one cycle. As wiper 118 steps around over contacts 139, 133*a*, 151, relay No. 9 pulls up to start the ball elevating motor 42; magnet 131 is pulled up to step the frame counting switch; and relay No. 8 is energized to start pin resetting motor 35. The frame counting switch steps once to illuminate frame indicating lamp No. 2.

The player may continue to bowl eight more balls (four frames). After the tenth ball has been bowled, the differential winding of relay No. 5 is energized by wiper B, contact 141 of the frame counting switch, thus cutting off the power until a coin is again inserted to operate slide 90.

Should the player make a strike during any frame, relay No. 7 will be operated by wiper 118, contact 133*a*, since all switches 33 are opened by the strike and the shunt around relay No. 7 is lifted. This causes illumination of strike lamp 150 and resetting of the pins and delivery of another ball, constituting a free play, since the frame counting magnet cannot operate to deduct the "strike" play if relay No. 7 operates.

The various advantages and objects of the invention may be accomplished by modifications of the particular embodiment specifically described herein, and it is intended that the appended claims shall include all equivalent arrangements fairly coming within their call.

Having thus described my invention, what I claim as new and desire to protect by Letters Patent is:

1. In a bowling game, a manikin having a movable arm and hand portion adapted to engage and project a ball in bowling action, a magnetically attractable ball, means for delivering the ball into position against said hand, magnetic means arranged adjacent said position and hand and operable to attract said ball firmly against said hand for propulsion by the latter, and mechanism for moving said arm to project the ball as aforesaid.

2. In a bowling game, a manikin having a movable arm with a hand adapted to engage and propel a ball in bowling action, electrical means for actuating said arm to propel the ball, circuit control means for operating said actuating means, an electro-conductive ball and means for delivering said ball into position before said hand for projection by the latter, a conductive member adjacent said hand and engaged by said ball when positioned as aforesaid, and circuit connections connecting said arm actuating means and control means in a power circuit through said hand, said ball, and said conductive member, to prevent projecting operation of said actuating means when there is no ball positioned on said conductive member before said hand.

3. In a bowling game, a bowling manikin having a conductive hand adapted for movement to engage and propel a ball in bowling action, means normally disposing said hand in a predetermined position to engage a ball for the purpose aforesaid, a conductive member beneath said hand, a conductive ball and means for delivering the same into bowling position on said conductive member in contact with said hand, and electrically operated mechanism including an operating switch for moving said hand to project said ball and connected in a power circuit through said hand and said conductive member by the agency of a ball positioned in engagement with the hand and conductive member as aforesaid.

4. In a bowling game, a bowling manikin having a conductive hand adapted for movement to engage and propel a ball in bowling action, means normally disposing said hand in a predetermined position to engage a ball for the purpose aforesaid, a conductive member beneath said hand, a magnetically attractable electro-conductive ball and means for delivering the same into bowling position on said conductive member in contact with said hand, and electrically operated mechanism including an operating switch for moving said hand to project said ball and connected in a power circuit through said hand and said conductive member by the agency of a ball positioned in engagement with the hand and conductive member as aforesaid, and magnetic means arranged adjacent said conductive member and effective to urge said ball into circuit closing engagement with said hand and conductive member.

5. In a bowling game, a manikin having a movable arm portion including a hand before which a bowling ball is to be disposed in bowling position, a magnetic bowling ball, means for delivering said ball toward said hand, magnetic means for attracting said ball into bowling position before said hand, electrically controlled means for effecting movement of said arm to bowl said ball, and a control circuit for said electrically controlled means and actuated by said ball in attracted position before the hand to render said electrically controlled means operable for the purpose aforesaid, and manually controlled means for energizing said electrically controlled means to effect a bowling of said ball.

JOE H. WARNER.