Office de la Propriété Intellectuelle du Canada
Un organisme d'Industrie Canada

Canadian Intellectual Property Office
An agency of Industry Canada

CA 2644038 C 2017/07/18

(11)(21) **2 644 038**

(12) **BREVET CANADIEN**
CANADIAN PATENT

(13) **C**

(86) **Date de dépôt PCT/PCT Filing Date:** 2007/04/26
(87) **Date publication PCT/PCT Publication Date:** 2007/11/29
(45) **Date de délivrance/Issue Date:** 2017/07/18
(85) **Entrée phase nationale/National Entry:** 2008/08/25
(86) **N° demande PCT/PCT Application No.:** CA 2007/000712
(87) **N° publication PCT/PCT Publication No.:** 2007/134427
(30) **Priorité/Priority:** 2006/05/19 (US11/419,239)

(51) **Cl.Int./Int.Cl.** ***G01K 7/16*** (2006.01), ***G01R 31/06*** (2006.01), ***H02H 7/06*** (2006.01), ***H02H 9/00*** (2006.01), ***H02K 11/25*** (2016.01)

(72) **Inventeur/Inventor:**
DOOLEY, KEVIN ALLAN, CA

(73) **Propriétaire/Owner:**
PRATT & WHITNEY CANADA CORP., CA

(74) **Agent:** NORTON ROSE FULBRIGHT CANADA LLP/S.E.N.C.R.L., S.R.L.

(54) **Titre : SYSTEME ET PROCEDE POUR SURVEILLER LA TEMPERATURE A L'INTERIEUR DE MACHINES ELECTRIQUES**
(54) **Title: SYSTEM AND METHOD FOR MONITORING TEMPERATURE INSIDE ELECTRIC MACHINES**

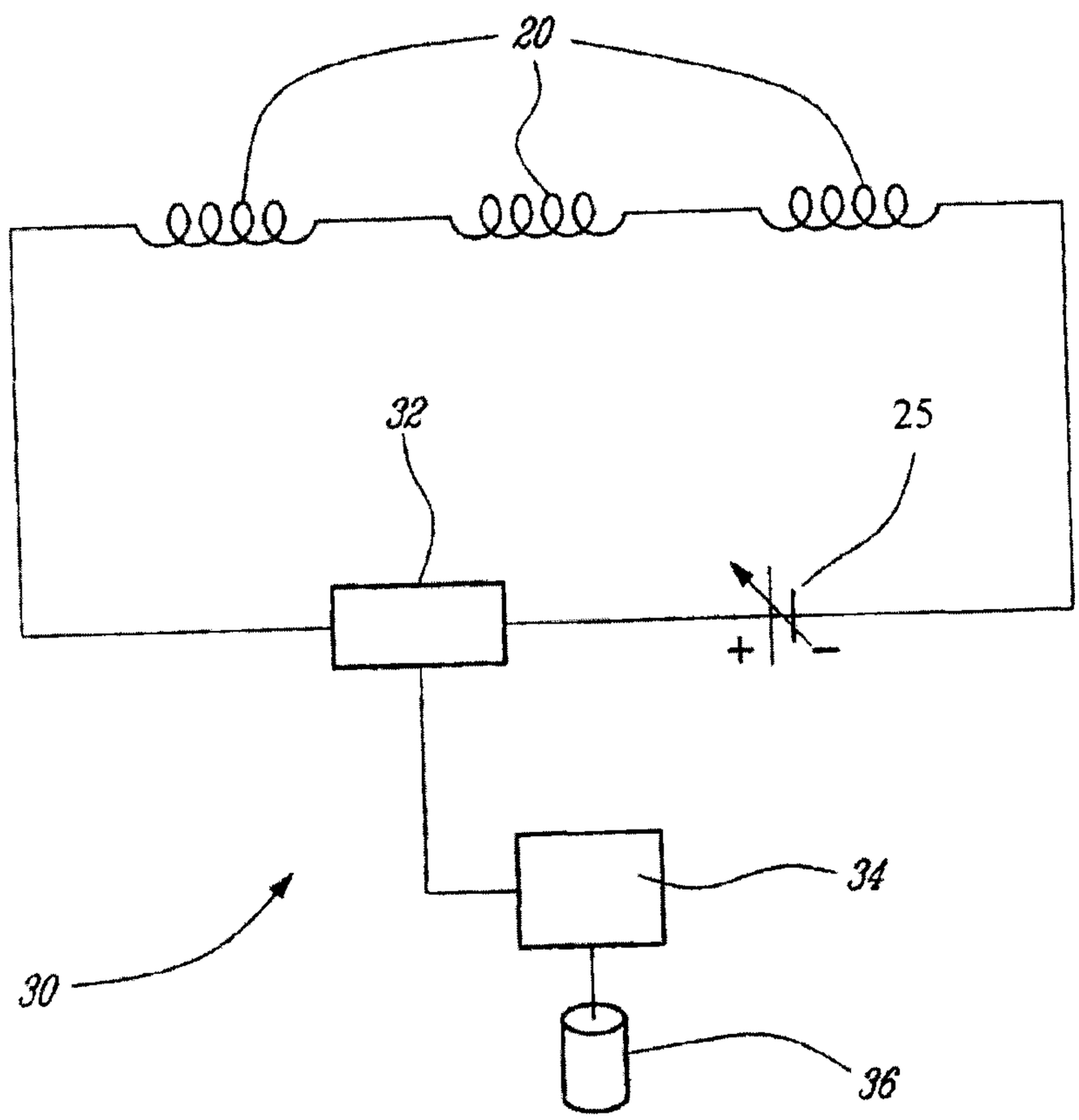

(57) **Abrégé/Abstract:**
The electric machine (10) comprises at least one winding made of a material having a temperature dependent resistance. The temperature of the winding is monitored using the resistance therein. Temperatures or resistances indicative of a fault can be sensed, and corrective action taken, without the need for dedicated temperature sensors.

(12) INTERNATIONAL APPLICATION PUBLISHED UNDER THE PATENT COOPERATION TREATY (PCT)

(19) World Intellectual Property Organization
International Bureau

(43) International Publication Date
29 November 2007 (29.11.2007)

PCT

(10) International Publication Number
WO 2007/134427 A1

(51) International Patent Classification:
G01K 7/16 (2006.01) *H02H 9/00* (2006.01)
G01R 31/06 (2006.01) *H02K 11/00* (2006.01)
H02H 7/06 (2006.01)

(21) International Application Number:
PCT/CA2007/000712

(22) International Filing Date: 26 April 2007 (26.04.2007)

(25) Filing Language: English

(26) Publication Language: English

(30) Priority Data:
11/419,239 19 May 2006 (19.05.2006) US

(71) Applicant *(for all designated States except US)*: **PRATT & WHITNEY CANADA CORP.** [CA/CA]; 1000 Marie-Victorin (01BE5), Longueuil, Québec J4G 1A1 (CA).

(72) Inventor; and
(75) Inventor/Applicant *(for US only)*: **DOOLEY, Kevin, Allan** [GB/CA]; 3671 Burnbrae Drive, Mississauga, Ontario L5C 2R6 (CA).

(74) Agent: **OGILVY RENAULT LLP/S.E.N.C.R.L., S.R.L.**; Suite 1600, 1981 McGill College Avenue, Montreal, Québec H3A 2Y3 (CA).

(81) Designated States *(unless otherwise indicated, for every kind of national protection available)*: AE, AG, AL, AM, AT, AU, AZ, BA, BB, BG, BH, BR, BW, BY, BZ, CA, CH, CN, CO, CR, CU, CZ, DE, DK, DM, DZ, EC, EE, EG, ES, FI, GB, GD, GE, GH, GM, GT, HN, HR, HU, ID, IL, IN, IS, JP, KE, KG, KM, KN, KP, KR, KZ, LA, LC, LK, LR, LS, LT, LU, LY, MA, MD, MG, MK, MN, MW, MX, MY, MZ, NA, NG, NI, NO, NZ, OM, PG, PH, PL, PT, RO, RS, RU, SC, SD, SE, SG, SK, SL, SM, SV, SY, TJ, TM, TN, TR, TT, TZ, UA, UG, US, UZ, VC, VN, ZA, ZM, ZW.

(84) Designated States *(unless otherwise indicated, for every kind of regional protection available)*: ARIPO (BW, GH, GM, KE, LS, MW, MZ, NA, SD, SL, SZ, TZ, UG, ZM, ZW), Eurasian (AM, AZ, BY, KG, KZ, MD, RU, TJ, TM), European (AT, BE, BG, CH, CY, CZ, DE, DK, EE, ES, FI, FR, GB, GR, HU, IE, IS, IT, LT, LU, LV, MC, MT, NL, PL, PT, RO, SE, SI, SK, TR), OAPI (BF, BJ, CF, CG, CI, CM, GA, GN, GQ, GW, ML, MR, NE, SN, TD, TG).

[Continued on next page]

(54) Title: SYSTEM AND METHOD FOR MONITORING TEMPERATURE INSIDE ELECTRIC MACHINES

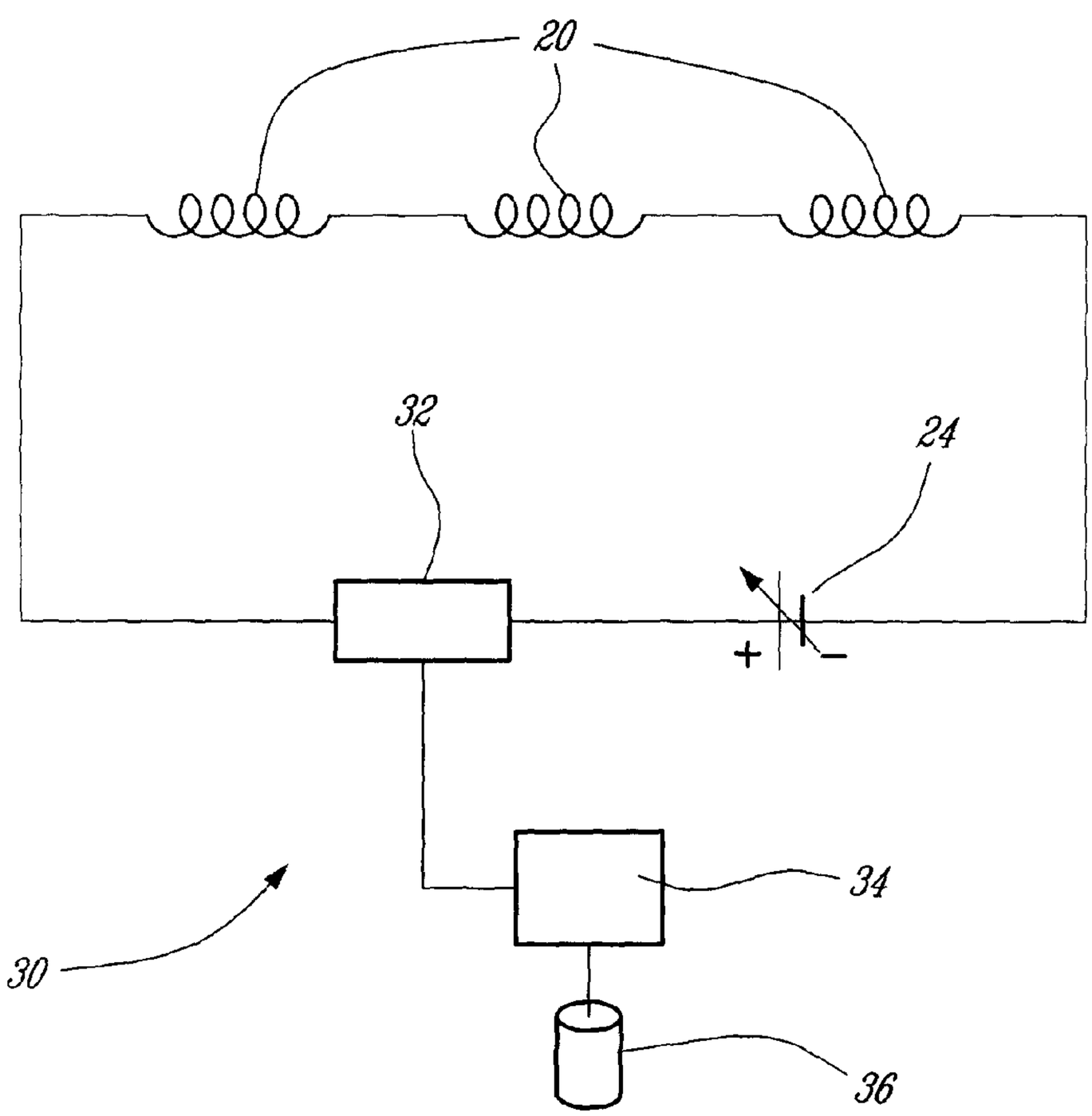

(57) Abstract: The electric machine (10) comprises at least one winding made of a material having a temperature dependent resistance. The temperature of the winding is monitored using the resistance therein. Temperatures or resistances indicative of a fault can be sensed, and corrective action taken, without the need for dedicated temperature sensors.

WO 2007/134427 A1

WO 2007/134427 A1

Published:
— *with international search report*

For two-letter codes and other abbreviations, refer to the "Guidance Notes on Codes and Abbreviations" appearing at the beginning of each regular issue of the PCT Gazette.

SYSTEM AND METHOD FOR MONITORING TEMPERATURE INSIDE ELECTRIC MACHINES

TECHNICAL FIELD

The invention relates to temperature monitoring inside electric machines.

BACKGROUND

In the unlikely event of a turn to turn short-circuit or other electrical fault inside an electric machine such as a motor or generator, the temperature at the faulted winding can become significantly elevated and thereby pose a risk to the continued operation of the machine. However, no other symptoms may be evident initially, until the insulation of the winding deteriorates to a significant level, after which a more serious thermal condition may result. Providing temperature sensors to sense a high temperature within a faulted winding can detect a fault, however, such arrangement adds complexity to the electric machine. Room for improvement exists.

SUMMARY

In one aspect, there is provided method for monitoring temperature of a plurality of series-connected stator windings of an electric machine, the stator windings having a temperature dependant resistance, the method comprising: operating the machine and using the stator windings to generate output electricity at an electrical output of the machine; determining a total resistance of the series windings while in operation; determining an average winding temperature of the stator windings using the resistance therein; and then determining the presence of a machine fault condition by comparing the average winding temperature against a selected threshold condition indicative of a fault.

In another aspect, there is provided a system for monitoring temperature stator windings of an electric machine, each winding having an electrical

resistance which changes with temperature, the system comprising: a plurality of series-connected windings disposed in the stator of the machine; a monitor adapted to determine a value indicative of an instantaneous resistance across the windings; and a processor adapted to calculate an instantaneous average temperature in the windings based on the resistance, and determine the presence of a fault condition based on the temperature.

BRIEF DESCRIPTION OF THE FIGURES

Reference will now be made to the accompanying figures, in which:

Figures 1a and 1b are a schematic cross-sectional views of examples of an electric machine suitable for use with the present invention; and

Figure 2 is a block diagram showing an example of a system for monitoring the temperature of an electric machine winding.

DETAILED DESCRIPTION

Figure 1a shows an example of an electric machine 10 of the general type described in applicant's US Patent No. 6,965,183, while Figure 1b shows an example of an electric machine of the general type described in applicant's co-pending application serial no. 10/996,411. In both cases, the machine 10 can be used as a motor and/or a generator, and includes a rotor 12 (a permanent magnet rotor is shown in the figures) and a stator 16 having a plurality of primary windings 18 and secondary windings 20. The primary windings 18 generate output power in response to rotor rotation (generator) or create a rotating electromagnetic field to cause rotor rotation (motor). The secondary windings 20 are used to control the operation of the electric machine 10 through affecting primary windings 18. A rotor magnetic circuit 22 and a secondary magnetic circuit 24 are defined in the stator 16 for directing magnetic flux within the machine 10. Secondary windings 20 are preferably aluminium, copper or other material (whether pure, alloy or composite, etc.) in which material temperature affects the material's electrical resistivity.

Figure 2 schematically illustrates an example of a system 30 for monitoring the temperature of one or more secondary windings 20 (three windings connected in series are shown in this example), while machine 10 is in operation without the need for dedicated temperature sensors or thermocouples. The system 30 comprises a monitoring device 32 connected in series with the windings of interest, in this case secondary windings 20. If there is more than one set of target windings in the machine 10, more than one monitoring unit 32 per machine may be provided.

The secondary windings 20 of machine 10 actually comprise a plurality of windings that are connected in series, and are also connected to a voltage source, in this case preferably a variable DC source 25. The monitoring device 32 is adapted to determine parameters used to determine winding resistivity, such as voltage and current in the secondary windings 20.

Once obtained, the parameters are sent to a processor 34, which may or may not be integrated within the monitoring device 32, as desired. The processor 34 calculates the instantaneous winding resistance based on the provided

parameters. In this case, the voltage and the current data is used to obtain the resistance simply using Ohm's law (i.e. V = IR). Other parameters and other techniques may be used. Whatever the technique used, by monitoring relevant operational parameters of the target winding, such as voltage and current flow through the control windings 20, one can monitor resistance. When the target windings are made of a temperature dependent material, for instance aluminium or copper, the temperature of the windings may be determined from the resistance. This could be done, for instance, using a suitable algorithm in the processor 34, or by using a look-up table stored in a memory 36, or in any other suitable manner.

In use, in the event of a short-circuit causing the local temperature in the faulty winding to increase, thereby changing its resistance, the average resistance of the winding or windings will correspondingly increase, and this will be detected by the system. Comparison of a resistance change against a selected threshold will indicate the existence of a fault or other condition requiring attention. Upon detection of a resistance change indicative of a fault condition, a suitable corrective action can be taken, such as to notify a machine operator, to notify a machine controller for automatic machine shutdown or other fault mitigation, and/or to notify a machine maintenance monitoring system for logging an appropriate maintenance action, to name just a few. As well, gradual changes in resistance may be monitored over time for an overall indication of a health trend of the machine, and parameters indicating that a presently operational machine may soon become subject to a fault can be sensed, the fault predicted and an appropriate corrective action taken in advance of any occurrence of the fault.

As can be appreciated, the present system and method can be used to monitor the temperature inside the electric machine without a need of dedicated temperature sensors therein. The system can also be used as an additional monitoring system, if required, when dedicated temperature sensors are provided.

The above description is meant to be exemplary only, and one skilled in the art will recognize that other changes may also be made to the embodiments described without departing from the scope of the invention disclosed as defined by the appended claims. For instance, the present invention is not limited for use with the machine as shown in Figures 1 and 2, and it may be used with other suitable machine designs as well. The type and nature of the windings monitored may be any suitable, and the material of which the target windings are made may likewise be any suitable. The monitoring of the winding's parameters may be done in any suitable manner, and any suitable technique may be used to determine the winding's resistance. Other changes from the described embodiment may be apparent to the skilled reader, and are not meant to be excluded from the scope of the appended claims merely because all possible variants and changes have not been exhaustively described.

CLAIMS:

1. A method for monitoring temperature of a plurality of series-connected stator windings of an electric machine, the stator windings having a temperature dependant resistance, the method comprising:

operating the machine and using the stator windings to generate output electricity at an electrical output of the machine;

determining a resistance across the stator windings while in operation;

determining an average winding temperature of the stator windings using the determined resistance; and then

determining the presence of a machine fault condition by comparing the average winding temperature against a selected threshold condition indicative of a fault;

wherein the determined resistance is determined from voltage measured across a portion of the stator windings, and current passing through the portion of the stator windings; and

wherein the voltage and the current are DC.

2. The method of claim 1 wherein an average resistance is determined across an entire winding of the machine.

3. The method of claim 1 further comprising the step of taking a corrective action based on a determination that the fault is present.

4. The method of claim 1 further comprising using at least one of the average winding temperature and the comparison information to determine a suitable corrective action.

5. The method of claim 1, further comprising the step of obtaining trend information over time by storing the winding temperature over time.

6. The method of claim 5 further comprising using the trend information to predict a future maintenance event.

7. The method of claim 5 further comprising using at least one of the winding temperature and the comparison information to suggest a maintenance action.

8. A system for monitoring temperature stator windings of an electric machine, each winding having an electrical resistance which changes with temperature, the system comprising:

a plurality of series-connected windings disposed in the stator of the machine;

a monitor adapted to determine a value indicative of a resistance across the windings, the value being determined from DC voltage measured across the windings and DC current passing through the windings; and

a processor adapted to calculate an average temperature in the windings based on the resistance, and determine the presence of a fault condition based on the temperature.

9. The system of claim 8 wherein an average resistance is determined across an entire winding of the machine.

10. The system of claim 9 wherein the monitor is connected in series with the windings.

11. The system of claim 10 wherein the monitor is adapted to determine a voltage drop across the windings and the current passing through the windings.

12. The system of claim 10 wherein the windings are control windings.

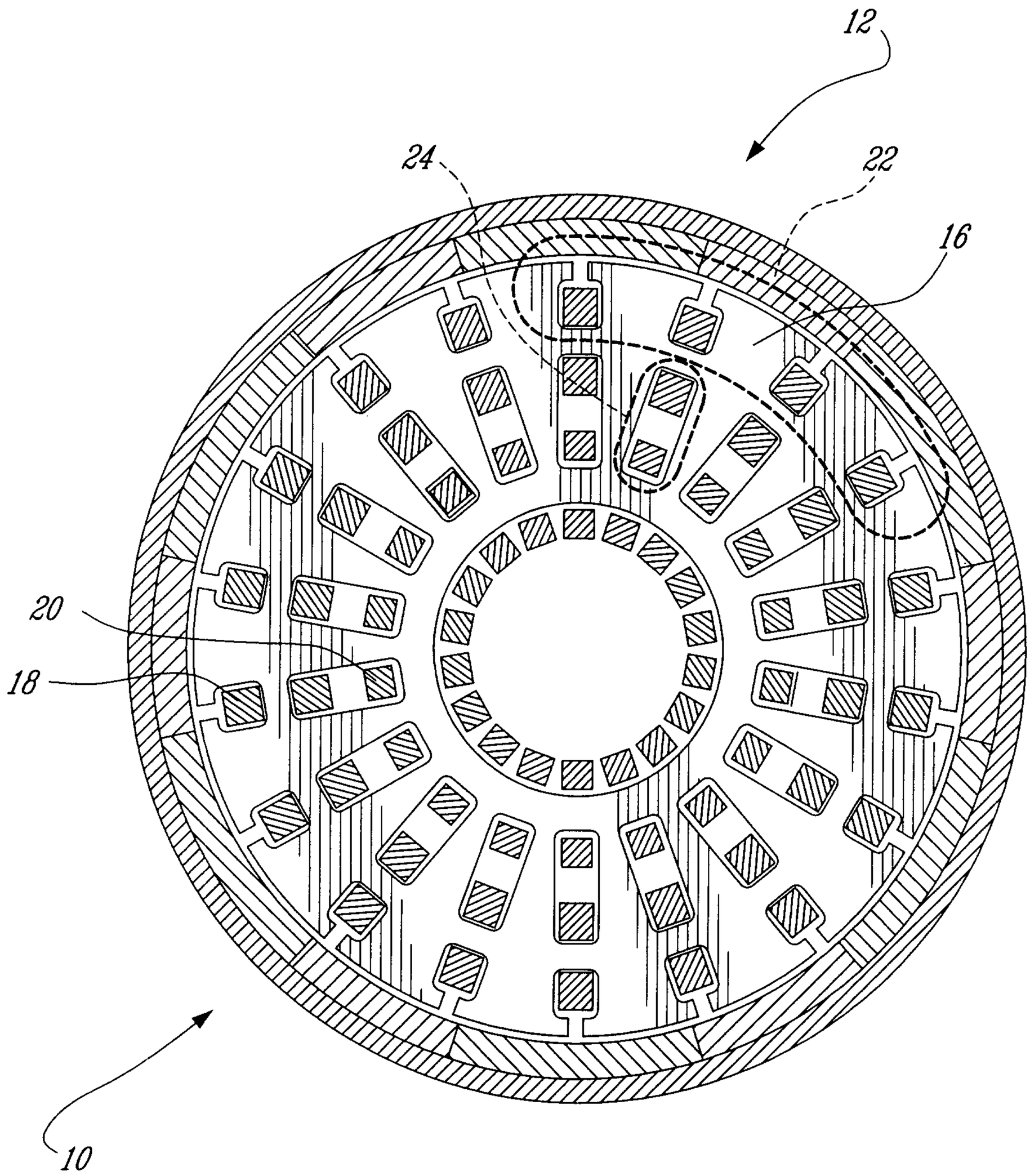

Fig. 1a

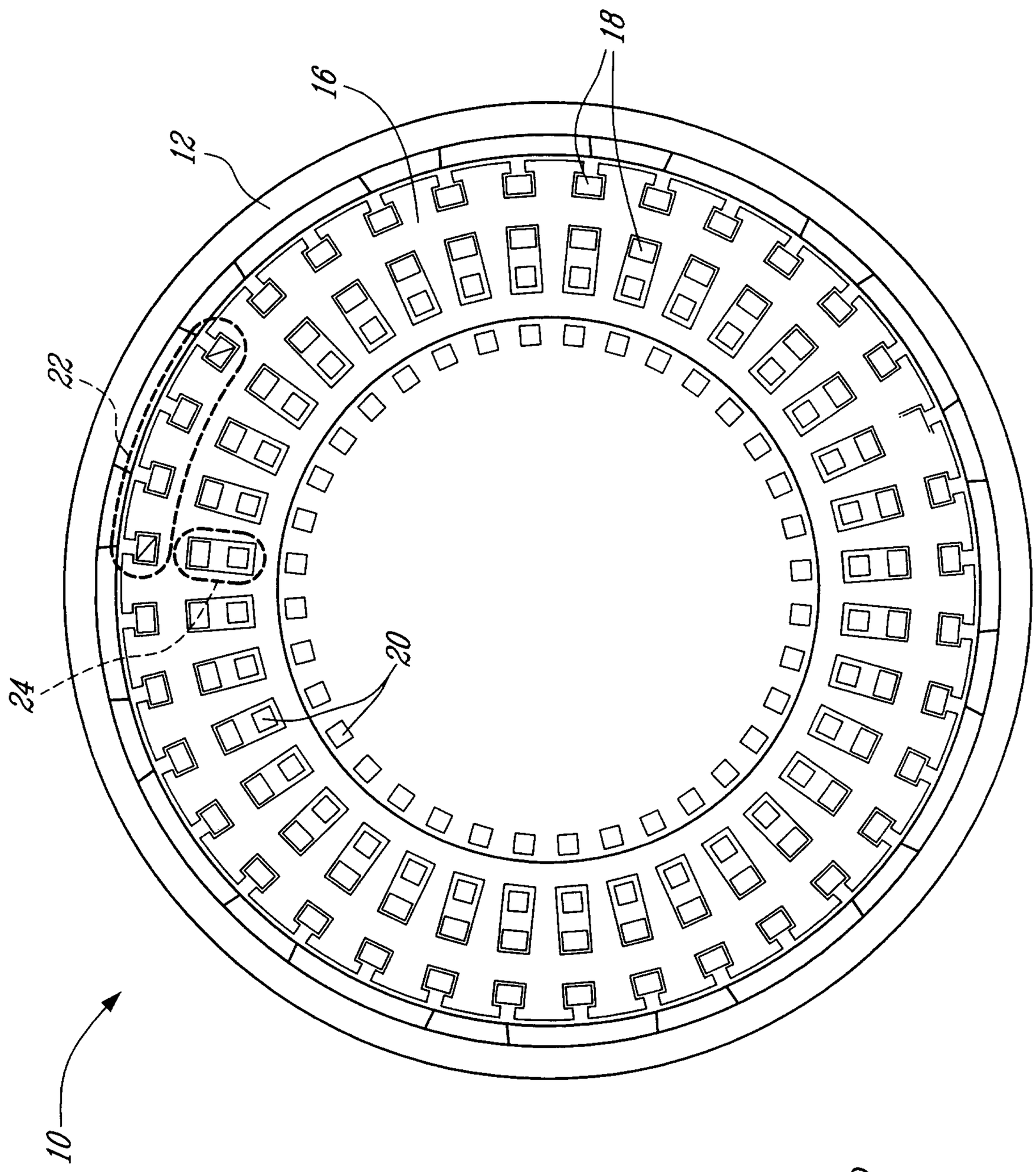

fig. 1b

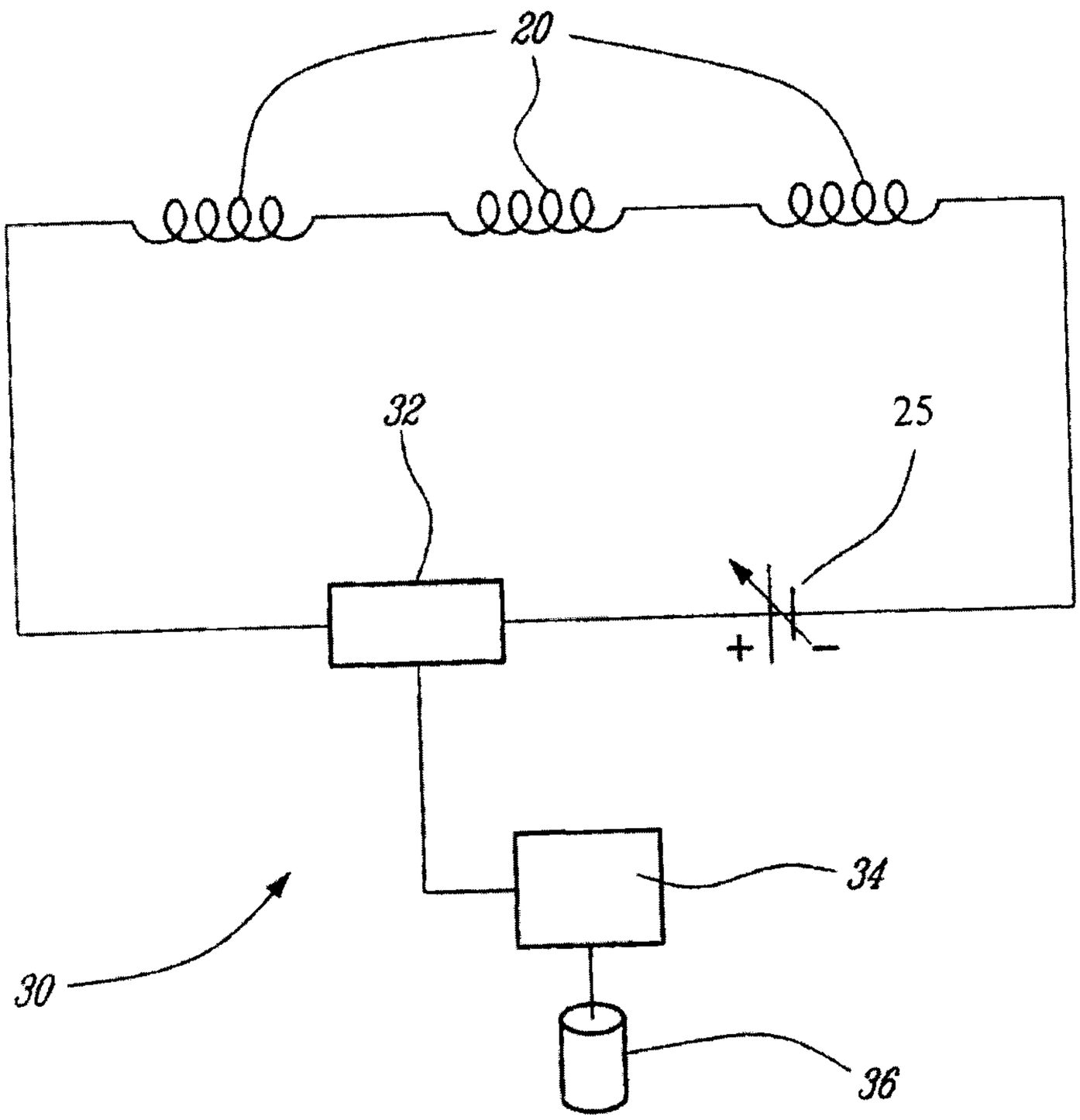

Fig. 2

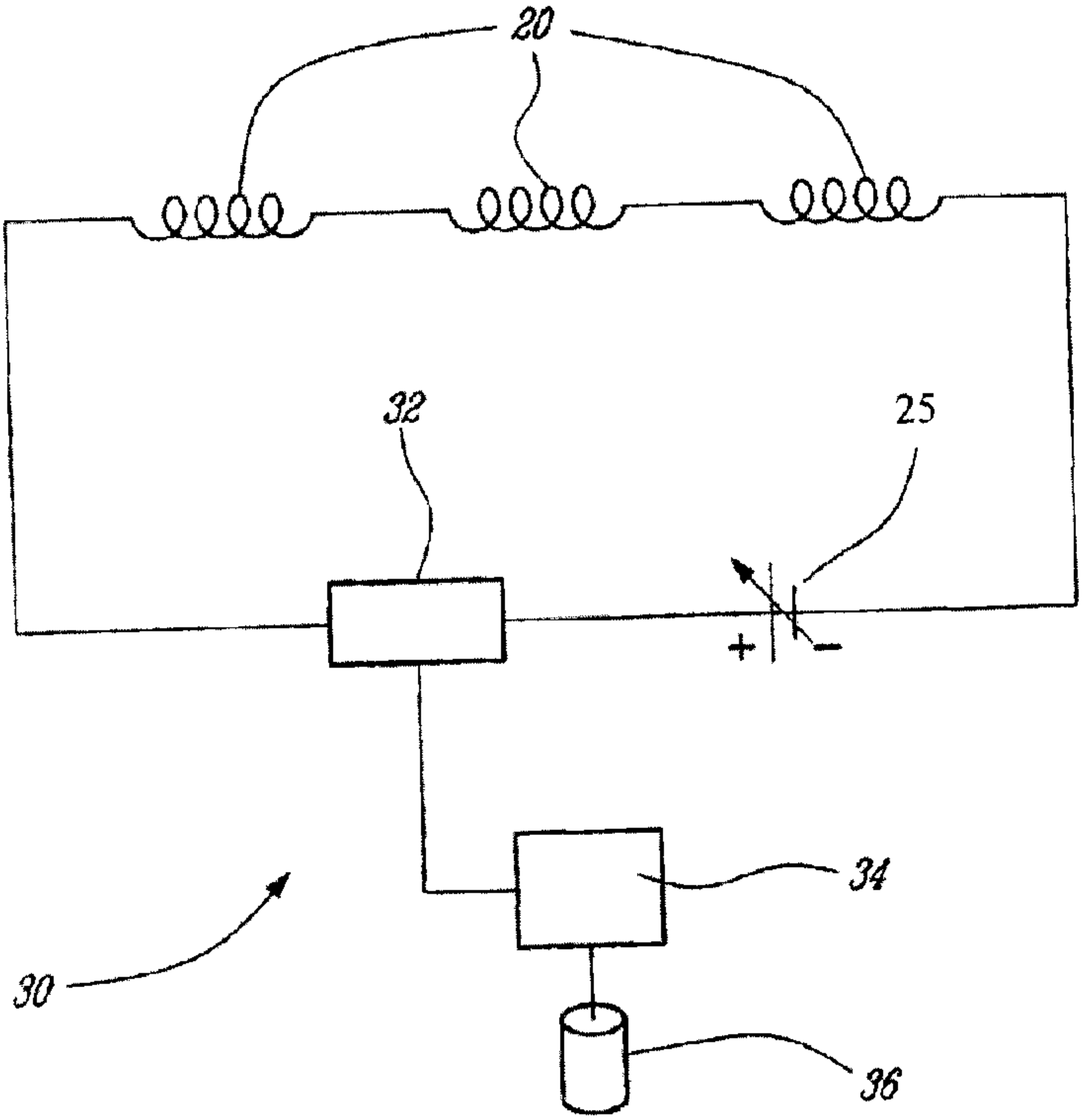
20
32
25
+
−
34
30
36