US 20120133367A1

(19) United States

(12) Patent Application Publication

Bittar et al.

(10) Pub. No.: US 2012/0133367 A1

(43) Pub. Date: May 31, 2012

(54) **FRACTURE CHARACTERIZATION USING DIRECTIONAL ELECTROMAGNETIC RESISTIVITY MEASUREMENTS**

(75) Inventors: **Michael S. Bittar**, Houston, TX (US); **Clive D. Menezes**, Conroe, TX (US)

(73) Assignee: **Halliburton Energy Services, Inc.**, Houston, TX (US)

(21) Appl. No.: **13/131,872**

(22) PCT Filed: **Aug. 20, 2009**

(86) PCT No.: **PCT/US09/54470**

§ 371 (c)(1), (2), (4) Date: **May 30, 2011**

Publication Classification

(51) **Int. Cl.**
G01V 3/17 (2006.01)

(52) **U.S. Cl.** **324/346**

(57) **ABSTRACT**

A disclosed fracture characterization method includes: collecting three-dimensional resistivity measurements of a volume surrounding an open borehole; analyzing the measurements to determine parameters describing fractures in the volume; and providing a report to a user based at least in part on said parameters. A fluid with a contrasting resistivity is employed to make the fractures detectable by a directional electromagnetic logging tool in the borehole. illustrative parameters include fracture direction, height, extent, length, and thickness. The resistivity measurements can be augmented using a borehole wall image logging tool. Also disclosed are fracturing methods that include: positioning a directional electromagnetic logging tool proximate to a formation; fracturing the formation; monitoring fracture progression with said tool; and halting the fracturing when measurements by said tool indicate that a predetermined set of criteria have been satisfied.

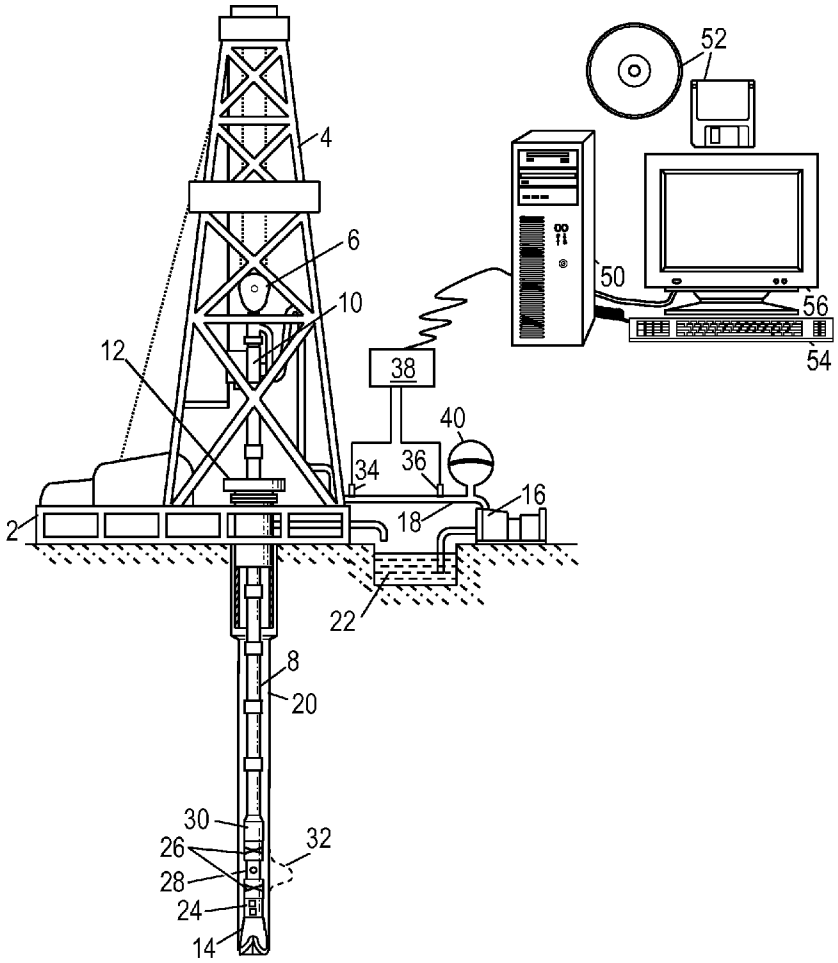

FIG. 1

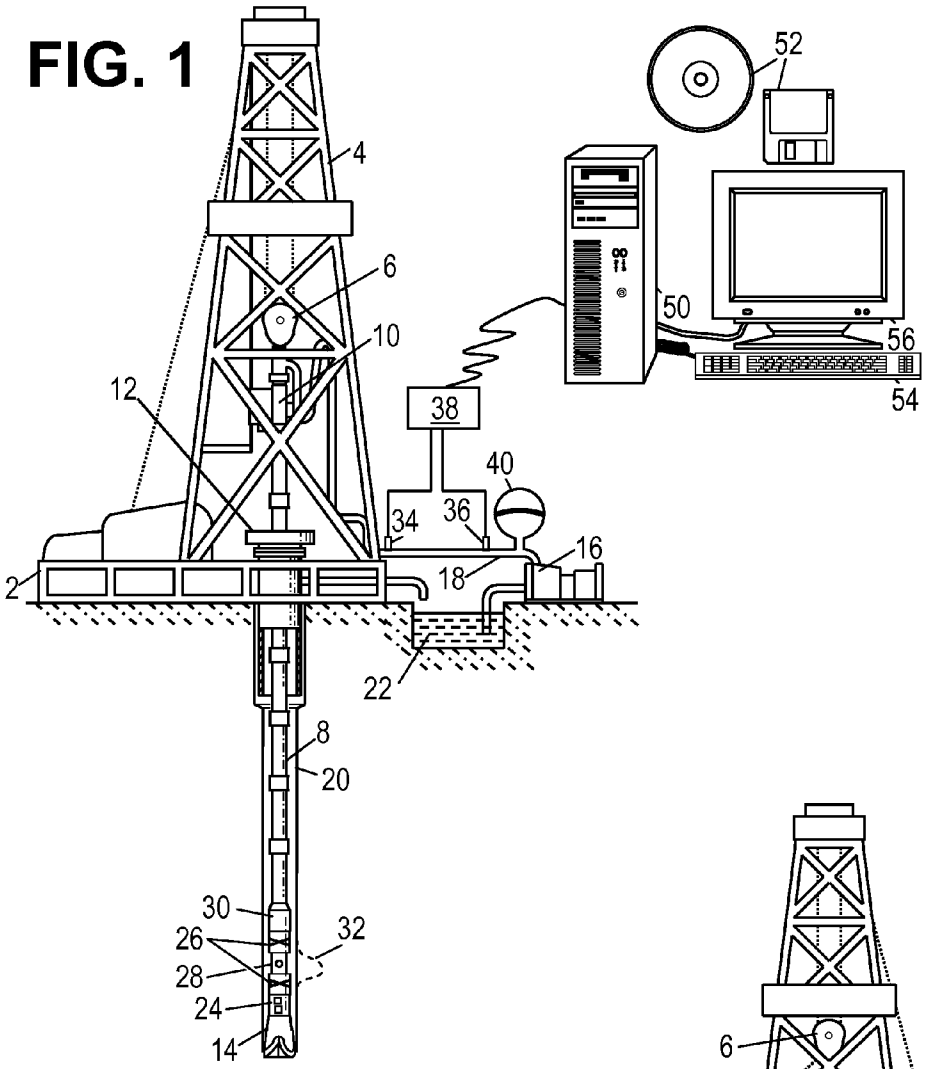
52
4
6
10
12
50
56
54
38
40
34
36
16
18
2
22
8
20
30
26
28
24
14
32

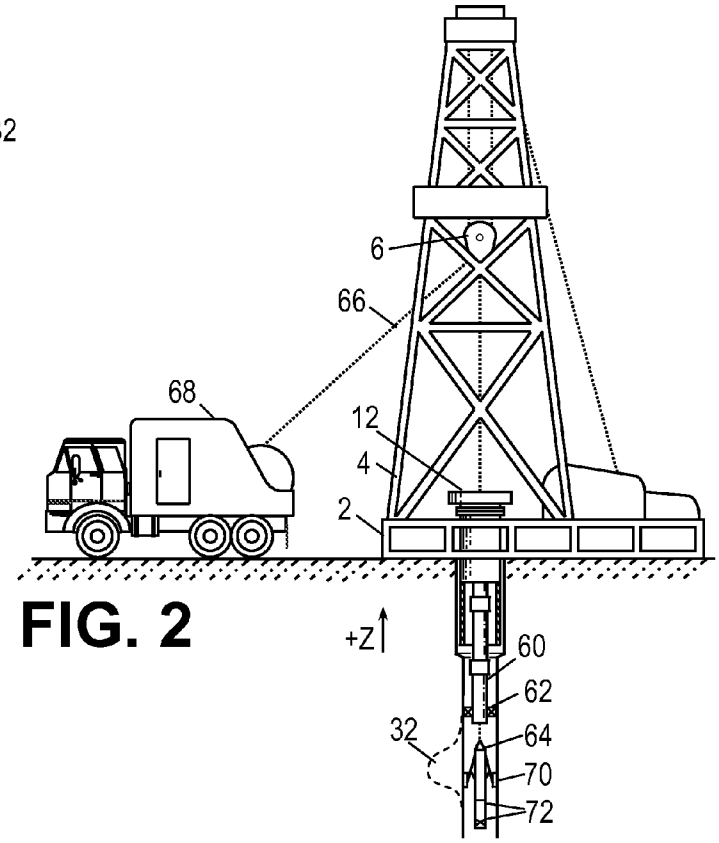
6
66
68
12
4
2
+Z
60
62
32
64
70
72

FIG. 2

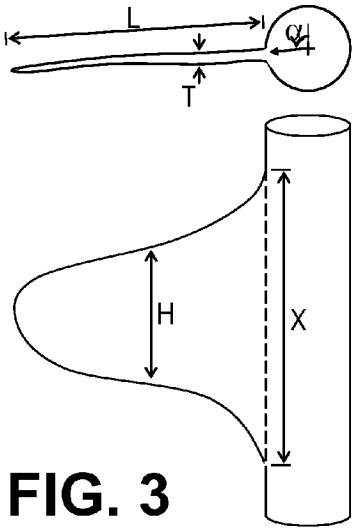

FIG. 3

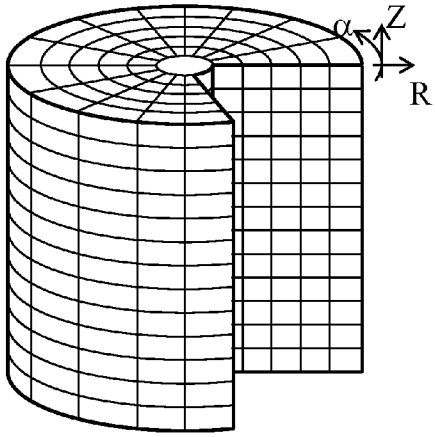

FIG. 4

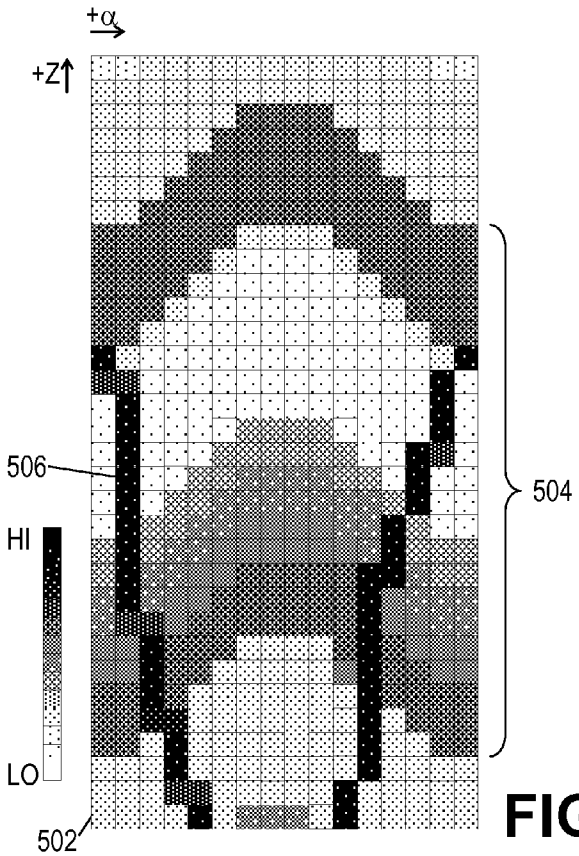

FIG. 5

FIG. 6

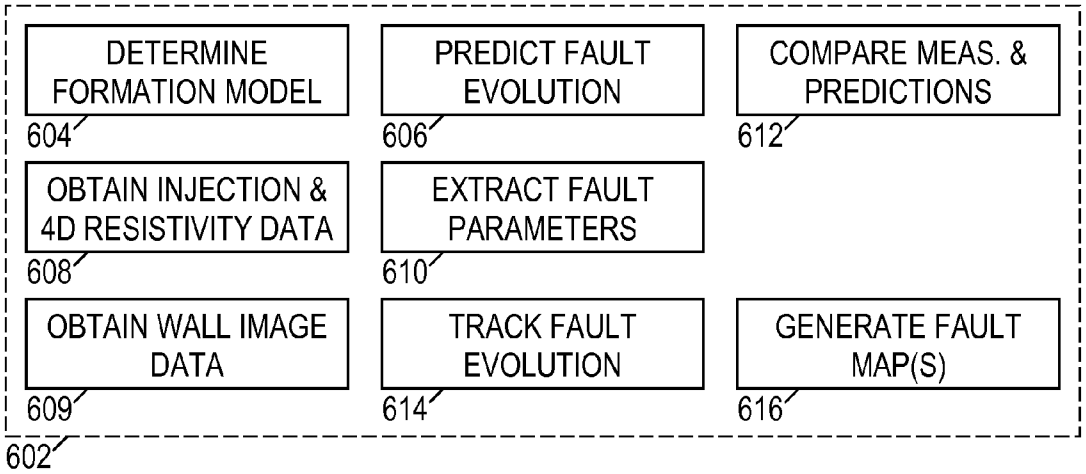
DETERMINE FORMATION MODEL
604
PREDICT FAULT EVOLUTION
606
COMPARE MEAS. & PREDICTIONS
612
OBTAIN INJECTION & 4D RESISTIVITY DATA
608
EXTRACT FAULT PARAMETERS
610
OBTAIN WALL IMAGE DATA
609
TRACK FAULT EVOLUTION
614
GENERATE FAULT MAP(S)
616
602

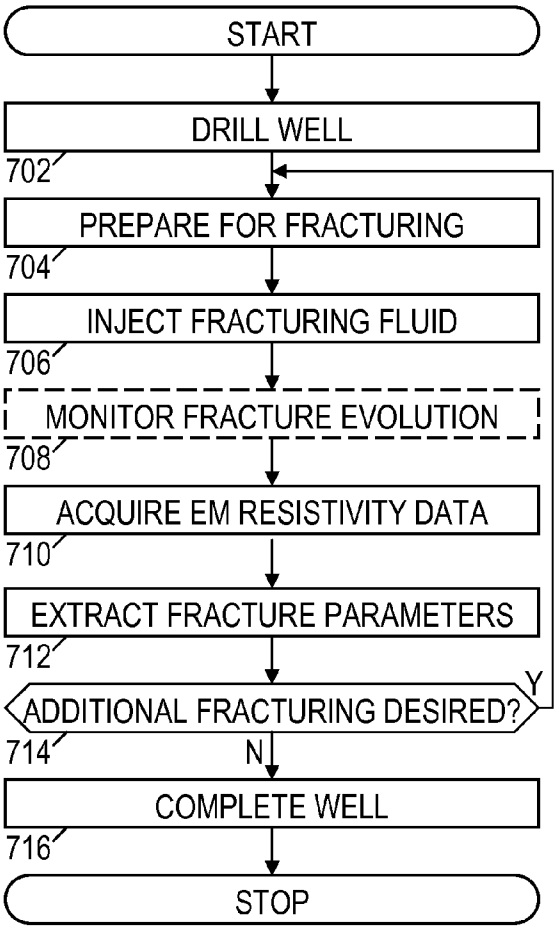
START
DRILL WELL
702
PREPARE FOR FRACTURING
704
INJECT FRACTURING FLUID
706
MONITOR FRACTURE EVOLUTION
708
ACQUIRE EM RESISTIVITY DATA
710
EXTRACT FRACTURE PARAMETERS
712
ADDITIONAL FRACTURING DESIRED?
Y
N
714
COMPLETE WELL
716
STOP

FIG. 7

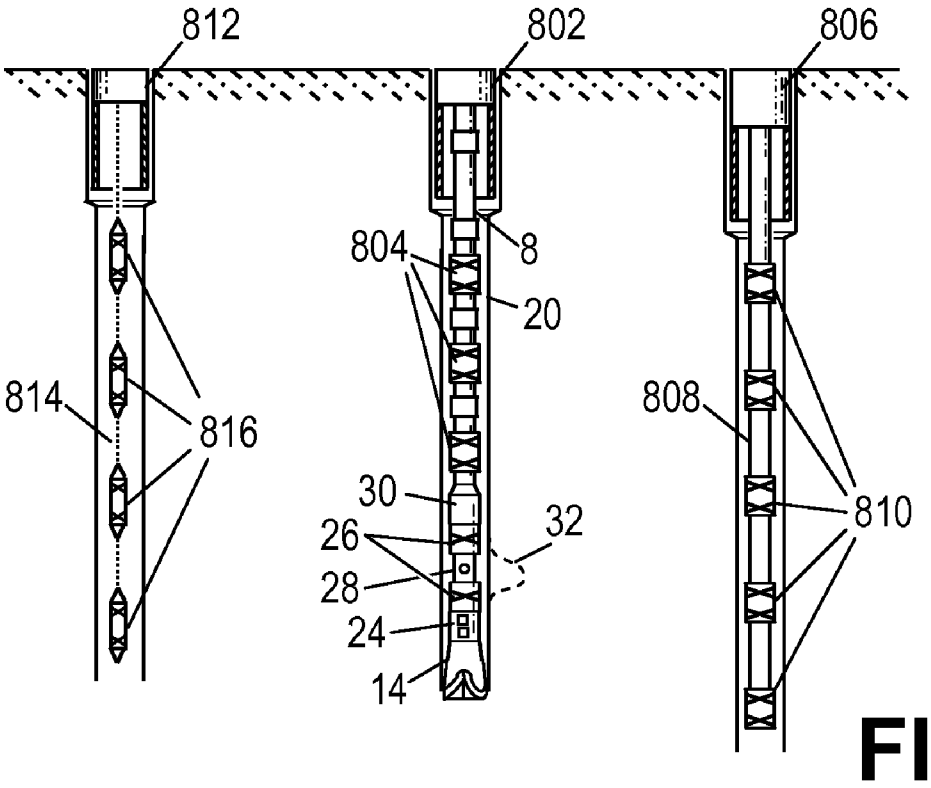

FIG. 8

FRACTURE CHARACTERIZATION USING DIRECTIONAL ELECTROMAGNETIC RESISTIVITY MEASUREMENTS

BACKGROUND

[0001] As drillers create wells to extract fluids from subterranean formations, they often perform a "fracturing" operation in which a fluid is injected into the well bore under high pressure to enlarge any existing fractures in the formation and to create new fractures. The injected fluid often carries entrained particulate matter to be deposited in the fractures, thereby propping them open when the pressure returns to normal. Such fractures substantially increase the permeability of the formation—making it easier for fluid to flow from the formation into the well bore (and vice versa). Fracturing operations are also often employed in injection wells, i.e., wells created to inject fluids into subterranean formations for disposal, storage, or reservoir flooding.

[0002] In any case, it is often desirable to confine the effects of the fracturing operation to a bounded region. For example, any fractures that would promote fluid flow between formations are generally undesirable, as such flows can contaminate water tables, relieve reservoir pressures, divert fluids into inaccessible regions, or create other problems. Accordingly, oilfield operators employ models to predict the effects of a fracturing operation and, in some cases, employ micro-seismic detection to monitor fracture evolution during the fracturing operation itself. The seismic sensors are typically positioned in one or more monitoring wells spaced apart from the fracturing well, but in at least one proposed method the seismic sensors are positioned in a concrete annulus around the bore of the injecting well. See, e.g., U.S. Pat. No. 5,503,252 to Withers, titled "System and Method for Monitoring the Location of Fractures in Earth Formations". Such seismic monitoring methods often perform inadequately in regions having high seismic attenuation or significant seismic interference.

BRIEF DESCRIPTION OF THE DRAWINGS

[0003] A better understanding of the various disclosed embodiments can be obtained when the detailed description is considered in conjunction with the accompanying drawings, in which:

[0004] FIG. **1** shows an illustrative fracturing while drilling environment;

[0005] FIG. **2** shows a second illustrative fracturing environment;

[0006] FIG. **3** shows some illustrative fracture characteristics;

[0007] FIG. **4** shows an illustrative 3D volume;

[0008] FIG. **5** shows an illustrative borehole wall image;

[0009] FIG. **6** shows an illustrative software architecture;

[0010] FIG. **7** shows an illustrative fracture characterization method; and

[0011] FIG. **8** shows an illustrative extended fracture monitoring array.

[0012] While the invention is susceptible to various modifications and alternative forms, specific embodiments thereof are shown by way of example in the drawings and will herein be described in detail. It should be understood, however, that the drawings and detailed description thereto are not intended to limit the claims to the particular forms described herein, but on the contrary, the intention is to cover all modifications, equivalents and alternatives falling within the spirit and scope of the patented claims.

DETAILED DESCRIPTION

[0013] The problems identified in the background are at least partly addressed by a borehole assembly that provides fracture characterization and monitoring of fracture progression. In some method embodiments, a fracturing fluid with a contrasting resistivity is employed to make the formation fractures detectable by a directional electromagnetic logging tool in the borehole. A directional electromagnetic logging tool collects three-dimensional measurements of a volume surrounding an open borehole. Such measurements can be collected during or after a fracturing operation. In some cases these 3D measurements will be augmented by borehole wall image measurements that complement the deep directional resistivity measurements. In any case, the measurements are analyzed to determine parameters characterizing fractures in the formation and to report these parameters to a user. Illustrative parameters include fracture direction, height, extent, length, and thickness. The resistivity measurements can be augmented using a borehole wall image logging tool.

[0014] Also disclosed are certain tool assemblies. Some disclosed logging assemblies include an electromagnetic resistivity tool, a borehole wall imaging tool, and a processor. The electromagnetic resistivity tool acquires resistivity measurements as a function of position, orientation, and radial distance. The borehole wall image logging tool acquires borehole wall measurements as a function of position and orientation. The processor combines said resistivity and borehole wail measurements to detect fractures and create a log of at least one fracture parameter, which can be displayed to a user.

[0015] Some disclosed fracturing assemblies include: a fluid injection port, a directional electromagnetic logging tool, and a processor. The fluid injection port supplies a fluid into a borehole to fracture a formation. The directional electromagnetic logging tool is positioned to obtain three-dimensional measurements of the formation being fractured. The processor determines fracturing progress from said measurements and communicates said progress to an operator.

[0016] Turning now to the figures, FIG. **1** shows an illustrative fracturing while drilling environment. A platform **2** supports a derrick **4** having a traveling block **6** that raises and lowers a drill string **8** in a borehole **20**. A top drive **10** rotates the drill string **8** as the string is lowered through the wellhead, thereby driving a drill bit **14** to create and extend the borehole **20**. A pump **16** circulates fluid through a feed pipe **18** to the drill string **8**. The fluid flows down through the interior of the string **8** to the bit **14**, passes through one or more orifices to remove drill cuttings from the hole bottom, and move upward along the annulus around the string **8** to carry the cuttings from the hole **20** into a pit **22**.

[0017] The bit **14** is part of a bottom hole assembly, or "BHA", that includes drill collars to add weight and rigidity to the end of the drill string **8**. The thick walls of the drill collars make them a convenient location for downhole tools and instrumentation. The bottomhole assembly of FIG. **1** includes a borehole wall imager **24**, a directional electromagnetic logging tool **26**, a stimulation tool **28**, and a telemetry tool **30**, The telemetry tool **30** includes a BHA control module and a position/orientation sensing module. Other downhole tools can be included in the BHA, as well as normal (non-instrumented) drill collars.

[0018] The borehole wall imager **24** measures one or more properties of the borehole wall as a function of tool position and orientation, thereby enabling the BHA to log an image of the borehole wall. Many suitable imaging technologies exist. In certain embodiments, the borehole wall imager employs acoustic transducers that rotate with the drill string to measure the acoustic impedance, acoustic reflectance, or the density of the formation at its interface with the borehole, In other embodiments, the borehole wall imager employs micro-resistivity measurements of the borehole wall. In yet other embodiments, gamma-ray or neutron attenuation measurements are collected. Each of these technologies provides the ability to identify locations where faults and voids intersect the borehole, and they can enable analysis of rock textures to determine formation composition and stress directions—information which can be instrumental for determining where and how to initiate a fracturing process. Illustrative examples of potentially suitable tools are disclosed in U.S. Pat. No. 4,829,488 ("Drive Mechanism for Borehole Televiewer"), U.S. Pat. No. 5,899,958 ("Logging while drilling borehole imaging . . . , "), U.S. Pat. No. 6,191,588 ("Methods and Apparatus for Imaging Earth Formation . . . "), and U.S. Pat. No. 6,359,438 ("Multi-depth focused resistivity imaging tool . . . ".

[0019] The directional electromagnetic logging tool **26** collects measurements indicative of the formation resistivity, permittivity, or other related properties (e.g., attenuation, phase shift, velocity) as a function of depth, azimuth, and radial distance from the borehole, Some tool designs employ tilted coil antennas that rotate with the drill string to make azimuthally sensitive measurements, and radial sensitivity can be achieved with multiple transmit-receive antenna spacings and/or multiple signal frequencies. Other tool designs employ antenna triads that can be "virtually" steered independently of the physical tool. Yet other designs employ downhole radar transducers for transmitting pulses and measuring reflections.

[0020] Each of these technologies offers the ability to identify regions having contrasting resistivities in the formation around the borehole. Illustrative examples of potentially suitable tools are disclosed in U.S. Pat. No. 5,757,191 ("Virtual Induction Sonde for Steering Transmitted and Received Signals"), U.S. Pat. No. 6,181,138 ("Directional Resistivity Measurements for Azimuthal Proximity Detection . . . "), U.S. Pat. No. 6,476,609 ("Electromagnetic Wave Resistivity Tool Having a Tilted Antenna . . . "), and co-pending application _____ ("A 3D Borehole Imager"). Each of these and other BHA tools can be powered by downhole batteries and/or downhole power generators such as a turbine in the fluid flow stream.

[0021] The stimulation tool **28** includes one or more ports for injecting a fracturing fluid into a formation. In some embodiments, such as those disclosed in U.S. Pat. App. Pub, 2005/0230107 ("Methods of Well Stimulation During Drilling Operations"), the ports are designed to jet high pressure flow streams directly against the borehole wall. In other embodiments, the stimulation tool restricts fluid flow along the borehole away from the ports, enabling the driller to create a region of high pressure against the borehole wall. Flow restrictors or packers can be deployed for this purpose. The intended result of the tool's operation is the formation and enlargement of fractures **32** in the formation proximate the stimulation tool. Further discussion of fracturing while drilling operations can be found in U.S. Pat, App. Pub. 2005/0230107, titled "Methods of Well Stimulation During Drilling Operations" by inventors Billy McDaniel and Jim Surjaatmadja.

[0022] We note that in FIG. **1**, the antennas of the directional electromagnetic logging tool **26** are positioned above and below the region of the borehole exposed to the maximum pressure from the ports of the stimulation tool **28**. This tool configuration is chosen to maximize the sensitivity of tool **26** to the evolution of fractures **32** during the fracturing process. Nevertheless, at least some directional electromagnetic logging tool configurations can sense beyond the end of the tool, so this configuration is not considered essential,

[0023] Telemetry tool **30** collects the measurements of the other BHA tools and stores or transmits representative data. The data can be processed downhole and/or sent to the surface to have the processing performed there, At the surface, a data acquisition module **38** collects the telemetry data and conveys it to a data processing system **50**, In the system of FIG. **1**, telemetry tool **30** communicates with the surface using mud pulse telemetry, an established technology that generates pressure waves that propagate in the fluid flowing through drill string **8**, Data acquisition module **38** detects these waves using sensors **34**, **36**. A pulsation dampener **40** can be employed to reduce noise interference caused by the pump **16**. Alternative telemetry technologies exist and can be used, including electromagnetic telemetry, wired drill pipe telemetry, and acoustic telemetry along the wall of the drill string. The various telemetry technologies also permit commands and configuration information to be communicated to the bottomhole assembly from the surface, thereby enabling a driller to interact with the bottomhole assembly and, among other things, steer the borehole along a desired path in response to data collected by the BHA.

[0024] Data processing system **50** includes internal data storage and memory having software (represented by removable information storage media **52**), along with one or more processor cores that execute the software. The software configures the system to interact with a user via one or more input/output devices (such as keyboard **54** and display **56**), Among other things, system **50** processes data received from acquisition module **38** and generates a representative display for the driller to perceive. During a fracturing operation, the system can display data indicative of measured fracture parameters and show how they compare to a desired target, thereby enabling an operator to tailor fluid flow parameters to optimize the result. In addition to acquiring data during the fracturing operation, the BHA can be raised and lowered to perform logging runs through the region of interest before and after the fracturing operation.

[0025] FIG. **2** shows a second illustrative fracturing environment. Unlike the fracturing while drilling environment of FIG. **1**, FIG. **2** shows that the BHA has been pulled from the borehole. A tubing string **60** is set in the borehole with one or more packers **62** to confine the fracturing pressure to the desired region of the borehole. A tool assembly **64** is suspended by a wireline **66** from a logging truck **68**, In addition to physical support, the wireline provides a bundle of electrical conductors (and optionally optical fibers) to provide power from the surface and convey telemetry from the tool assembly to the processing systems at the surface. The illustrated tool assembly includes an array of borehole wall imaging pads **70** and a directional electromagnetic logging tool **72**.

[0026] The tool assembly can be conveyed on logging trips through the open borehole before and after a fracturing opera-

tion to collect three-dimensional measurements of the formation's electromagnetic properties, as well as images of the borehole walls. Moreover, the tool assembly can be anchored (or optionally tripped on logging runs) during the fracturing operation to monitor the evolution of the fractures. Processing systems in the logging truck enable operators to observe representative characteristics of the detected fractures.

[0027] FIG. **3** shows some illustrative fracture characteristics that can be determined by the processing systems based on measurements by the directional electromagnetic tool and optionally the borehole wall imaging tool. In the overhead view of the borehole, FIG. **3** shows a fracture of length L, average thickness T, and azimuthal angle α intersecting the borehole. (As used herein, the azimuthal angle of a fracture represents the fracture's orientation in the horizontal plane rather than its position relative to the borehole.) In the side view, it can be seen that the fracture has an average height H and it intersects the borehole along an extent X. Such parameters are illustrative of fracture characteristics that would be of interest to analysts. However, they do not represent an exhaustive set of parameters nor do they represent a necessary set of parameters. For example, some analysts may be more interested in fracture volume, while others may simply need the limits of a "bounding box" that encloses all the detected fractures.

[0028] FIG. **4** shows an illustrative 3D volume representing the data that can be collected by the directional electromagnetic logging tool. The tool makes formation measurements as a function of depth (or position along the borehole axis) Z, azimuth angle α, and radial distance R. This coordinate system is divided into a grid of cells or "voxels", and the tool determines one or more formation property measurements for each cell.

[0029] In at least some embodiments, the tool provides resistivity measurements for 32 or more depths at 256 or more azimuthal angles, with a depth resolution of 2 centimeters or better, In high resistivity formations, an operator can use a low resistivity fracturing fluid such as a saline mud. The directional electromagnetic logging tool can detect regions of such contrast material, thereby enabling a processing system to identify fractures and determine their characteristic parameters, Similarly, in low resistivity formations, an operator can use a high resistivity fracturing fluid such as an oil-based mud. If a region is repeatedly scanned during a fracturing operation, the processing system can track the evolution of fractures.

[0030] FIG. **5** shows an illustrative borehole wall image **502**. An imaging tool scans the borehole wall and makes formation property measurements as a function of depth Z and azimuthal angle. As with the 3D volume, this 2D map is divided into cells or "pixels", and the tool determines one or more formation property measurements for each cell, The measurement value can be shown as a color or intensity value in the map, thereby creating an image of the borehole wall. Acoustic measurements and micro-resistivity measurements offer the opportunity for very high resolution images, with **512** or more azimuthal angles and a depth resolution of 0.5 cm or better. Such images make bedding structures **504** and faults **506** clearly visible. The processing system **50** can combine such measurements to obtain a better determination of the fracture parameters.

[0031] FIG. **6** shows functional block diagrams for an illustrative software package **602** suitable for running on data processing system **50**, optionally in cooperation with other computer systems on a computer network.

[0032] In block **604**, the software determines a model of the formation. This model can be based on seismic survey data, augmented by well logs. The model generally includes estimates of formation bed geometry, formation composition, density, and stress. In block **606**, the software predicts the behavior of the formation when the formation is subjected to a fracturing process. The software can rely on rock mechanic models and empirical models from previous fracturing studies when simulating the evolution of faults in response to specified fracturing fluid pressures and flow rates. Once an operator has tried various simulations and arrived at desirable results, the fracturing operation can begin.

[0033] In block **608**, the software configures the processing system to obtain injection data, i.e., data regarding characteristics of the fracturing fluid (including resistivity), the borehole geometry, the fluid flow rate, the fluid pressure, and the cumulative fluid volume. The software further configures the processing system to collect 4D resistivity data, i.e., a time progression of 3D resistivity data. In block **609**, the software optionally obtains a log of the borehole wall image.

[0034] In block **610**, the software processes the resistivity data and optionally combines it with wall image data to extract fault parameters. Illustrative parameters include fracture azimuth, fracture complexity, fracture coverage (e.g., the percentage of the borehole that is within a specified distance of at least one fracture), fracture height, and fracture half-length. (A fracturing operation generally forms many fractures. The lengths of these fractures have an exponential distribution that is characterized in terms of the half-length, i.e., the length greater than the lengths of half of the fractures and less than the lengths of the other half.)

[0035] The extracted fault parameters can be compared to the model predictions in block **612** to test the model validity and/or determine if the goals of the fracturing process have been achieved. This comparison can also he used as the basis for refining the model or adjusting the injection parameters to optimize the fracturing process. In the current embodiment, such refinements and adjustments are in the purview of the user, but in certain contemplated embodiments the software includes a module for automatically controlling the injection parameters in response to the fault parameter measurements. Illustrative adjustments include reducing the flow rate as fracture parameters approach the target state.

[0036] In block **614** the history of extracted fault parameters is recorded to track the evolution of faults during the fracturing process, A mapping module **616** generates fault maps based on the information tracked in blocks **610** and **614**, enabling the user to visually monitor the progression of the fracturing process.

[0037] FIG. **7** shows an illustrative fracture characterization method. Beginning in block **702**, the operator drills a well. In block **704**, the operator prepares for a fracturing operation. Such preparation may include logging the borehole, preparing a model, determining a fracturing plan based on simulation, and securing fracturing fluids and equipment. Also included is positioning the fluid injection ports at the desired fracturing position and, if necessary, isolating the fracturing region from the rest of the borehole. In some configurations the operator might also position a directional electromagnetic logging tool in the vicinity of the fracturing region.

[0038] In block **706**, the operator pumps the fracturing fluid through the injection port. As mentioned previously, the fluid possesses an electrical resistivity that contrasts with the resistivity of the formation. The operator optionally collects directional electromagnetic logging measurements during the fracturing process in block **708**. Such measurements enable real-time tracking of fracture evolution so that the operator can tailor the injection parameters to optimize results.

[0039] Once the fluid injection is complete (or at least temporarily halted), the operator collects directional electromagnetic resistivity measurements in block **710**, optionally augmented with a borehole image log. In block **712**, the data processing system extracts fracture parameters from these measurements. The operator analyzes the fracture parameters in block **714** and determines whether additional fracturing is desired. If so, the method loops back to block **704**. Otherwise the operator completes the well in block **716**, typically by cementing a casing in place and perforating it in those locations where it is desired to produce or inject fluids.

[0040] The region in which direction& electromagnetic logging tool measurements can be performed can be extended in either or both of at least two ways illustrated in FIG. **8**. FIG. **8** shows a well **802** being drilled and fractured using a drill string **8**. The drill string **8** includes multiple directional electromagnetic logging tools **804** to extend the measurement region along the axis of the well. The measurement region can be extended away from the well **802** using one or more offset wells **806**, **812**, each having one or more directional electromagnetic logging tools. Offset well **806** has an array of directional electromagnetic logging tools **810** on a continuous tubing string **808** (e.g., coil tubing or composite tubing). Offset well **812** has an array of directional electromagnetic logging tools **816** on a wireline **814**. Fractures that extend into the measurement regions of these additional tools **804**, **810**, **816**, can be tracked in real time. If the leading edge of the fracture is within the range of multiple tools, the measurements can be combined to triangulate and track the fractures with greater accuracy.

[0041] Numerous variations and modifications will become apparent to those skilled in the art once the above disclosure is fully appreciated. For example, the directional electromagnetic logging tool can be located outside the borehole, e.g., in a second borehole near the borehole being fractured, to monitor fracture formation from a distance. In another embodiment, the directional electromagnetic logging measurements are used in conjunction with a micro-seismic monitoring tool to complement and verify the operation of each. It is intended that the following claims be interpreted to embrace all such variations and modifications.

What is claimed is:

1. A fracture characterization method that comprises:

collecting three-dimensional measurements of a volume surrounding an open borehole, wherein the volume includes at least one fracture filled with a fluid having a resistivity that contrasts with the formation;

analyzing the measurements to determine at least one parameter describing said fracture; and

providing a report to a user based at least in part on said parameter.

2. The method of claim **1**, wherein the at least one parameter comprises a fracture direction.

3. The method of claim **1**, wherein the at least one parameter comprises at least one dimension in the set consisting of a fracture height, a fracture extent, a fracture length, and a fracture thickness.

4. The method of claim **1**, further comprising injecting said fluid into the borehole before collecting said measurements.

5. The method of claim **1**, further comprising collecting a borehole wall image log to measure characteristics of said fracture where it intersects the borehole.

6. The method of claim **6**, wherein the three-dimensional measurements are acquired by a directional electromagnetic resistivity tool, and the borehole wall image log is acquired by an acoustic tool or a micro-resistivity tool.

7. A logging assembly that comprises:

an electromagnetic resistivity tool that acquires resistivity measurements as a function of position, orientation, and radial distance;

a borehole wall image logging tool that acquires borehole wall measurements as a function of position and orientation; and

an uphole or downhole processor that combines said resistivity and borehole wall measurements to detect fractures and create a log of at least one fracture parameter.

8. The logging assembly of claim **7**, wherein the at least one fracture parameter includes a parameter from the set comprising fracture direction, fracture height, fracture extent, fracture length, and fracture thickness.

9. The logging assembly of claim **7**, further comprising a processing system that displays said log to a user.

10. A fracturing method that comprises:

positioning a directional electromagnetic logging tool proximate to a formation;

fracturing the formation;

monitoring fracture progression with said tool; and

halting the fracturing when measurements by said tool indicate that a predetermined set of criteria have been satisfied.

11. The method of claim **10**, wherein said monitoring includes:

collecting three-dimensional measurements of the formation with said tool while fracturing;

deriving at least one fracture dimension from said measurements; and

determining whether the at least one fracture dimension satisfies the set of criteria.

12. The method of claim **10**, wherein the set of criteria includes a minimum length subject to a maximum extent.

13. The method of claim **10**, wherein said fracturing includes injecting a fracturing fluid having a resistivity less than 10% of the formation's resistivity.

14. The method of claim **10**, wherein said fracturing includes injecting a fracturing fluid having a conductivity less than 10% of the formation's conductivity.

15. The method of claim **10**, further comprising:

obtaining a borehole wall image log; and

combining information from the borehole wall image log with said measurements to determine at least one fracture dimension.

16. A fracturing assembly that comprises;

a fluid injection port that supplies a fluid into a borehole in a formation;

a directional electromagnetic logging tool positioned to obtain three-dimensional measurements of the formation exposed to the fluid; and

a processor that determines fracturing progress from said measurements and communicates said progress to an operator.

17. The fracturing assembly of claim **16**, wherein the port jets the fluid against the borehole wall, and wherein the port is located between antennas of the directional electromagnetic logging tool.

18. The fracturing assembly of claim **16**, wherein the directional electromagnetic tool is a wireline tool suspended through the fluid injection port.

19. The fracturing assembly of claim **16**, further comprising a borehole wall imaging tool.

20. The fracturing assembly of claim **16**, wherein the processor extracts at least one fracture dimension from said measurements, wherein the at least one fracture dimension is in a set consisting of fracture direction, fracture height, fracture extent, fracture length, and fracture thickness.

* * * * *