(12) INTERNATIONAL APPLICATION PUBLISHED UNDER THE PATENT COOPERATION TREATY (PCT)

(19) World Intellectual Property Organization
International Bureau

(43) International Publication Date
13 September 2018 (13.09.2018)

WIPO | PCT

(10) International Publication Number
WO 2018/165253 A1

(51) International Patent Classification:
G01N 27/82 (2006.01) *G01N 21/84* (2006.01)

(21) International Application Number:
PCT/US2018/021287

(22) International Filing Date:
07 March 2018 (07.03.2018)

(25) Filing Language: English

(26) Publication Language: English

(30) Priority Data:
62/468,169 07 March 2017 (07.03.2017) US

(71) Applicant: **THE CHARLES STARK DRAPER LABORATORY, INC.** [US/US]; 555 Technology Square, Cambridge, Massachusetts 02139 (US).

(72) Inventors: **BABCOCK IV, Philip S.**; c/o The Charles Stark Draper Laboratory, Inc., 555 Technology Square, Cambridge, Massachusetts 02139 (US). **STILLO, Michael**; c/o The Charles Stark Draper Laboratory, Inc., 555 Technology Square, Cambridge, Massachusetts 02139 (US). **RYAN, Kimberly**; c/o The Charles Stark Draper Laboratory, Inc., 555 Technology Square, Cambridge, Massachusetts 02139 (US). **VINCENT, Emily**; c/o The Charles Stark Draper Laboratory, Inc., 555 Technology Square, Cambridge, Massachusetts 02139 (US). **SPREHN, Kelly**; c/o The Charles Stark Draper Laboratory, Inc., 555 Technology Square, Cambridge, Massachusetts 02139 (US). **BRILL, Ryan M.**; c/o The Charles Stark Draper Laboratory, Inc., 555 Technology Square, Cambridge, Massachusetts 02139 (US). **BUSILLO, Gregory G.**; c/o The Charles Stark Draper Laboratory, Inc., 555 Technology Square, Cambridge, Massachusetts 02139 (US). **SUN, Fei**; c/o The Charles Stark Draper Laboratory, Inc., 555 Technology Square, Cambridge, Massachusetts 02139 (US).

(74) Agent: **JAKOBSCHE, George J.** et al.; Sunstein Kann Murphy & Timbers LLP, 125 Summer Street, Boston, Massachusetts 02110 (US).

(81) Designated States *(unless otherwise indicated, for every kind of national protection available)*: AE, AG, AL, AM, AO, AT, AU, AZ, BA, BB, BG, BH, BN, BR, BW, BY, BZ, CA, CH, CL, CN, CO, CR, CU, CZ, DE, DJ, DK, DM, DO, DZ, EC, EE, EG, ES, FI, GB, GD, GE, GH, GM, GT, HN, HR, HU, ID, IL, IN, IR, IS, JO, JP, KE, KG, KH, KN, KP, KR, KW, KZ, LA, LC, LK, LR, LS, LU, LY, MA, MD, ME, MG, MK, MN, MW, MX, MY, MZ, NA, NG, NI, NO, NZ, OM, PA, PE, PG, PH, PL, PT, QA, RO, RS, RU, RW, SA, SC, SD, SE, SG, SK, SL, SM, ST, SV, SY, TH, TJ, TM, TN, TR, TT, TZ, UA, UG, US, UZ, VC, VN, ZA, ZM, ZW.

(54) Title: AUGMENTED REALITY VISUALIZATION FOR PIPE INSPECTION

(57) Abstract: A defect visualization system (100, 1000, 1100) includes an augmented reality display system (116) to display an image (108, 1008) representing a defect, such as missing metal, in a ferromagnetic material (106) when a user (102) gazes at a portion of the ferromagnetic material (106) hosting the defect, based on magnetic field data (118) provide by a magnetometry system (112), thereby facilitating locating the defect and replacing magnetometers (300) after the defect has been repaired, even if location references originally present on cladding material are lost or destroyed during the repair.

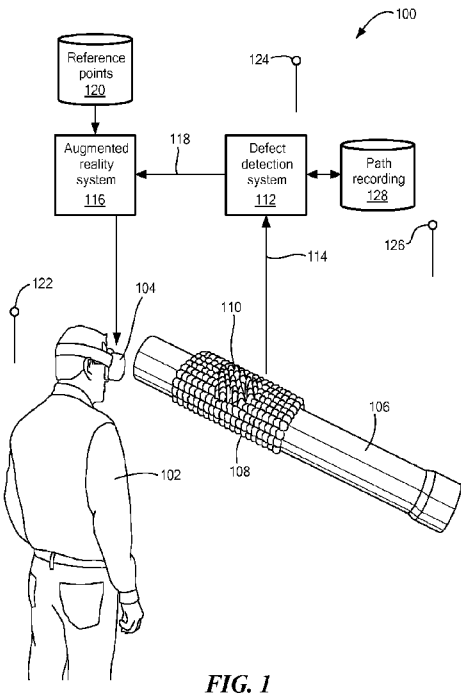

FIG. 1

[Continued on next page]

WO 2018/165253 A1

(84) Designated States *(unless otherwise indicated, for every kind of regional protection available)*: ARIPO (BW, GH, GM, KE, LR, LS, MW, MZ, NA, RW, SD, SL, ST, SZ, TZ, UG, ZM, ZW), Eurasian (AM, AZ, BY, KG, KZ, RU, TJ, TM), European (AL, AT, BE, BG, CH, CY, CZ, DE, DK, EE, ES, FI, FR, GB, GR, HR, HU, IE, IS, IT, LT, LU, LV, MC, MK, MT, NL, NO, PL, PT, RO, RS, SE, SI, SK, SM, TR), OAPI (BF, BJ, CF, CG, CI, CM, GA, GN, GQ, GW, KM, ML, MR, NE, SN, TD, TG).

Published:

— *with international search report (Art. 21(3))*

Augmented Reality Visualization for Pipe Inspection

CROSS REFERENCE TO RELATED APPLICATIONS

[0001] This application claims the benefit of U.S. Prov. Pat. Appl. No. 62/468,169, filed 3/7/2017, titled "Augmented Reality Visualization for Pipe Inspection," the entire contents of which are hereby incorporated by reference herein, for all purposes.

BACKGROUND

TECHNICAL FIELD

[0002] The present invention relates to detecting defects in ferromagnetic materials and, more particularly, to systems that facilitate visualizing detected defects.

RELATED ART

[0003] Ferromagnetic materials, such as iron, nickel, steel and other materials, are used to make many items, such as pipes, beams and ocean vessel hulls. Defects, which may develop in the ferromagnetic materials over time, can cause problems. Prior art systems can provide location information about a defect. However, actually locating a physical portion of a ferromagnetic material, such as a buried pipe, to gain physical access to the portion that contains the defect remains very difficult.

[0004] As used herein, "ferromagnetic material" includes both ferromagnetic and ferrimagnetic material. In many cases, these materials are subject to corrosion and/or erosion. As used herein, corrosion means loss of material as a result of chemical reaction, most commonly oxidation. As used herein, erosion means loss of material as a result of a mechanical process, such as abrasion. For example, sand produced in an oil or gas well can abrade the inside of a pipeline carrying oil or gas from the well. Material loss due to corrosion and/or erosion is collectively referred to herein as a "defect." As used herein, the term defect also includes a crack, or a void or inclusion of foreign material, such as might occur during manufacture or later. If allowed to occur beyond a critical point, corrosion, erosion or another defect may compromise structural integrity of an item, possibly resulting in a catastrophic failure, such as an oil spill, building collapse or ship sinking.

[0005] Magnetometry-based systems and method for detecting defects in ferromagnetic material are known, as exemplified in U.S. Pat. No. 9,651,471 ('471), issued 5/16/2017, titled "System and Method of Measuring Defects in Ferromagnetic Materials," U.S. Pat. No. 9,651,472 ('472), issued 5/16/2017, titled "System and Method of Measuring Defects in Ferromagnetic Materials," U.S. Pat. Appl. No. 15/197,699 ('699), filed 6/29/2016, titled "System and Method for Characterizing Ferromagnetic Material," and U.S. Pat. Appl. No. 15/653,036 ('036), filed 7/18/2017, titled "System and Method for Characterizing Ferromagnetic Material," the entire contents of each of which are hereby incorporated by reference herein, for all purposes.

[0006] However, pipe inspection, repair and/or replacement, particularly in a large, complex facility, such as a processing plant, requires an ability to locate both a detection device and a defect the detection device finds. Geolocation, i.e., stating where in the facility the device or defect is, has been historically done by using sector and pipe identifiers from drawings of the facility. While useful when looking at data in a control center, this information is cumbersome in the actual facility, where many of these reference location identifiers are not present. Furthermore, in some situations, precise location of the defect is a critical piece of knowledge in both diagnosing the defect and selecting next steps to be performed.

[0007] When a magnetometry-based detector is used, an output of the detector gives indications of the defect location, but locating this position directly on the pipe can be difficult. In the case of a scanning magnetometry system, one needs to recreate the scan locations to find the precise location of the defect. For permanently-mounted magnetometry systems, the defect is below the sensor area and, therefore, difficult to precisely locate, if the magnetometry sensor is removed, which is typically done for further analysis, inspection or repair of the defect.

[0008] Often, industrial pipes are coated with protective layers and/or layers of insulation with cladding over the insulation. It is very difficult to translate any location points that may be marked on the insulation, or its cladding, down to the pipe itself, because removing the cladding, insulation and pipe coatings destroys the reference points. Since pipe defects tend to be internal to the pipe, there is no external visual clue as to the defect location, even when all of the pipe coverings have been removed.

[0009] Thus, although prior art systems can provide location information about a defect, actually locating a physical portion of a ferromagnetic material, such as a buried pipe, to gain physical access to the portion that contains the defect remains very difficult.

SUMMARY OF EMBODIMENTS

[0010] An embodiment of the present invention provides a system for visualizing defects in ferromagnetic material. The system includes a source of magnetic field data. The magnetic field data characterizes location of the defect on or in the ferromagnetic material. A display device is configured to generate an image perceivable by a human. An augmented reality system is coupled to receive the magnetic field data. The augmented reality system is configured to cause display, by the display device, of an image. The image represents the magnetic field data. The image is displayed so the image registers, as viewed by the human, with the ferromagnetic material.

[0011] The magnetic field data may characterize location of metal missing from the ferromagnetic material.

[0012] Optionally, the display device includes one or more of the following: a head-mounted display, optionally wherein the head-mounted display comprises a stereoscopic vision display device; and/or a 3D projector, optionally wherein the 3D projector comprises a holographic projector; and/or a hand-held device comprising a display screen, optionally wherein the display screen comprises a stereoscopic vision display screen.

[0013] Optionally, the display device further includes a camera. The display device may be configured to display an image captured by the camera, overlaid with the image representing the magnetic field data.

[0014] Optionally, the image representing the magnetic field data includes one or more of the following: first icons representing magnetometers that detected a magnetic field proximate the ferromagnetic material and from which the magnetic field data was derived, such that the first icons register, as viewed by the human, with the ferromagnetic material, optionally wherein the image representing the magnetic field data comprises a second icon, visually distinct from the first icons, representing a failed magnetometer; and/or historical information about the magnetic field data, such that the historical information registers, as viewed by the human, with the ferromagnetic material, optionally wherein the historical information comprises a thickness graph showing estimated thickness of the ferromagnetic material over time; and/or a relative field strength graph representing relative strength of a magnetic field proximate the ferromagnetic material and from which the magnetic field data was derived, such that the relative

field strength graph registers, as viewed by the human, with the ferromagnetic material; and/or a graphical representation of the defect on or in the ferromagnetic material, such that the graphical representation registers, as viewed by the human, with the ferromagnetic material; and/or an indication of a path taken by the array, such that the indication of the path registers, as viewed by the human, with the ferromagnetic material; and/or geolocation information about the magnetic field data represented in the image; and/or a fault code; and/or battery charge level information; and/or a system serial number; and/or sensor array identification information; and/or system diagnostic information; and/or a failed sensor indicator.

[0015] Optionally, the source of magnetic field data includes one or more of: a plurality of magnetometers disposed proximate a surface of the ferromagnetic material, wherein each magnetometer of the plurality of magnetometers is fixed in position, relative to the ferromagnetic material; and/or a plurality of magnetometers arranged in an array, the array being positionable at a standoff distance from the ferromagnetic material and translatable along an axis to a plurality of scan positions along the ferromagnetic material.

[0016] Another embodiment of the present invention provides a method for visualizing defects in ferromagnetic material. The method includes generating magnetic field data. The magnetic field data characterizes location of the defect on or in the ferromagnetic material. An augmented reality system is coupled to receive the magnetic field data. A display device is configured to generate an image perceivable by a human. The display device is coupled to the augmented reality system. The display device displays an image representing the magnetic field data, such that the image registers, as viewed by the human, with the ferromagnetic material.

[0017] The magnetic field data may characterize location of metal missing from the ferromagnetic material.

[0018] Optionally, coupling the display device includes one or more of the following: coupling a head-mounted display, optionally wherein the head-mounted display comprises a stereoscopic vision display device; and/or coupling a 3D projector, optionally wherein the 3D projector comprises a holographic projector; and/or coupling a hand-held device comprising a display screen, optionally wherein the display screen comprises a stereoscopic vision display screen.

[0019] Optionally, the method includes displaying, by the display device, an image captured by a camera; and overlaying the image captured by the camera with the image representing the magnetic field data.

[0020] Optionally, displaying the image representing the magnetic field data includes one or more of the following: displaying first icons representing magnetometers that detected a magnetic field proximate the ferromagnetic material and from which the magnetic field data was derived, such that the first icons register, as viewed by the human, with the ferromagnetic material, and optionally displaying a second icon, visually distinct from the first icons, representing a failed magnetometer; and/or displaying historical information about the magnetic field data, such that the historical information registers, as viewed by the human, with the ferromagnetic material, optionally wherein the historical information comprises a thickness graph showing estimated thickness of the ferromagnetic material over time; and/or displaying a relative field strength graph representing relative strength of a magnetic field proximate the ferromagnetic material and from which the magnetic field data was derived, such that the relative field strength graph registers, as viewed by the human, with the ferromagnetic material; and/or displaying a graphical representation of the defect on or in the ferromagnetic material, such that the graphical representation registers, as viewed by the human, with the ferromagnetic material; and/or displaying geolocation information about the magnetic field data represented in the image; and/or displaying an indication of a path taken by the array, such that the indication of the path registers, as viewed by the human, with the ferromagnetic material; and/or displaying a fault code; and/or displaying battery charge level information; and/or displaying a system serial number; and/or displaying sensor array identification information; and/or displaying system diagnostic information; and/or displaying a failed sensor indicator.

[0021] Optionally, generating the magnetic field data includes one or more of the following: obtaining data from a plurality of magnetometers disposed proximate a surface of the ferromagnetic material, wherein each magnetometer of the plurality of magnetometers is fixed in position, relative to the ferromagnetic material; and/or obtaining data from a plurality of magnetometers arranged in an array, positioned at a standoff distance from the ferromagnetic material and translated along an axis to a plurality of scan positions along the ferromagnetic material.

[0022] Yet another embodiment of the present invention provides a storage medium storing computer program instructions that, when executed by a processing device, cause the processing device to perform a method as set out above.

[0023] The magnetic field data may characterize location of metal missing from the ferromagnetic material.

[0024] An embodiment of the present invention provides a system for visualizing defects in ferromagnetic material. The system includes a source of magnetic field data. The magnetic field data characterizes location of the defect on or in the ferromagnetic material. The system also includes a display device. The display device is configured to generate an image perceivable by a human. The system also includes an augmented reality system. The augmented reality system is coupled to receive the magnetic field data. The augmented reality system causes display, by the display device, of an image. The image represents the magnetic field data, such that the image registers, as viewed by the human, with the ferromagnetic material.

[0025] The magnetic field data may characterize location of metal missing from the ferromagnetic material.

[0026] The display device may include a head-worn mounted display, such as a stereoscopic vision display device.

[0027] The display device may include a 3D projector, such as a holographic projector.

[0028] The display device may include a hand-held device that includes a display screen. The display screen may include a stereoscopic vision display screen.

[0029] The display device may further include a camera, and the display device may be configured to display an image captured by the camera, overlaid with the image representing the magnetic field data.

[0030] The image representing the magnetic field data may include first icons. The first icons may represent magnetometers that detected a magnetic field proximate the ferromagnetic material and from which the magnetic field data was derived. The first icons may register, as viewed by the human, with the ferromagnetic material.

[0031] The image representing the magnetic field data may include a second icon. The second icon may be visually distinct from the first icons. The second icon may represent a failed magnetometer.

[0032] The image representing the magnetic field data may include historical information about the magnetic field data. The historical information may register, as viewed by the human, with the ferromagnetic material.

[0033] The historical information may include a graph showing estimated thickness of the ferromagnetic material over time.

[0034] The image representing the magnetic field data may include a graph. The graph may represent relative strength of a magnetic field proximate the ferromagnetic material and from which the magnetic field data was derived. The graph may register, as viewed by the human, with the ferromagnetic material.

[0035] The image representing the magnetic field data may include a graphical representation of the defect on or in the ferromagnetic material. The graphical representation may register, as viewed by the human, with the ferromagnetic material.

[0036] The image representing the magnetic field data may include a defect depth map, such that the defect depth map registers, as viewed by the human, with the ferromagnetic material.

[0037] The image representing the magnetic field data may include one or more of: a fault code, battery charge level information, a system serial number, sensor array identification information, system diagnostic information, geolocation information about the magnetic field data represented in the image and/or a failed sensor indicator.

[0038] The source of magnetic field data may include a plurality of magnetometers. The plurality of magnetometers may be disposed proximate a surface of the ferromagnetic material. Each magnetometer of the plurality of magnetometers may be fixed in position, relative to the ferromagnetic material.

[0039] The source of magnetic field data may include a plurality of magnetometers arranged in an array. The array may be positionable at a standoff distance from the ferromagnetic material. The array may be translatable along an axis to a plurality of scan positions along the ferromagnetic material.

[0040] The image representing the magnetic field data may include an indication of a path taken by the array. The indication of the path may register, as viewed by the human, with the ferromagnetic material.

[0041] Another embodiment of the present invention provides a method for visualizing defects in ferromagnetic material. The method includes generating magnetic field data. The magnetic field data characterizes location of from the defect on or in the ferromagnetic material. A display device is provided. The display device is configured to generate an image perceivable by a human. An augmented reality system is provided. The augmented reality system is coupled to receive the magnetic field data. An image representing the magnetic field data is displayed by the display device. The image is displayed, such that the image registers, as viewed by the human, with the ferromagnetic material.

[0042] The magnetic field data may characterize location of metal missing from the ferromagnetic material.

[0043] Providing the display device may include providing a head-mounted display, such as a stereoscopic vision display device.

[0044] Providing the display device may include providing a 3D projector, such as a holographic projector.

[0045] Providing the display device may include providing a hand-held device that includes a display screen, such as a stereoscopic vision display screen.

[0046] A camera may be provided. An image captured by the camera may be displayed by the display device. The image captured by the camera may be overlaid with the image representing the magnetic field data.

[0047] Displaying the image representing the magnetic field data may include displaying first icons, The first icons may represent magnetometers that detected a magnetic field proximate the ferromagnetic material and from which the magnetic field data was derived The image may be displayed, such that the first icons register, as viewed by the human, with the ferromagnetic material.

[0048] Displaying the image representing the magnetic field data may include displaying a second icon. The second icon may be visually distinct from the first icons. The second icon may represent a failed magnetometer.

[0049] Displaying the image representing the magnetic field data may include displaying historical information about the magnetic field data. The historical information may register, as viewed by the human, with the ferromagnetic material.

[0050] Displaying the historical information may include estimating thickness of the ferromagnetic material over time and displaying a graph showing the estimated thickness of the ferromagnetic material over time.

[0051] Displaying the image representing the magnetic field data may include displaying a graph. The graph may represent relative strength of a magnetic field proximate the ferromagnetic material and from which the magnetic field data was derived. The image may be displayed, such that the graph registers, as viewed by the human, with the ferromagnetic material.

[0052] Displaying the image representing the magnetic field data may include displaying a graphical representation of the defect on or in the ferromagnetic material. The image may be displayed, such that the graphical representation registers, as viewed by the human, with the ferromagnetic material.

[0053] Displaying the image representing the magnetic field data may include displaying a defect depth map, such that the defect depth map registers, as viewed by the human, with the ferromagnetic material.

[0054] Displaying the image representing the magnetic field data may include displaying one or more of: a fault code, battery charge level information, a system serial number, sensor array identification information, system diagnostic information, geolocation information about the magnetic field data represented in the image and/or a failed sensor indicator.

[0055] Generating the magnetic field data may include providing a plurality of magnetometers. The plurality of magnetometers may be disposed proximate a surface of the ferromagnetic material. Each magnetometer of the plurality of magnetometers may be fixed in position, relative to the ferromagnetic material.

[0056] Generating the magnetic field data may include providing a plurality of magnetometers arranged in an array. The array may be positioned at a standoff distance from the ferromagnetic material. The array may be translated along an axis to a plurality of scan positions along the ferromagnetic material.

[0057] Displaying the image representing the magnetic field data may include displaying an indication of a path taken by the array. The indication of the path may be displayed, such that the indication of the path registers, as viewed by the human, with the ferromagnetic material.

[0058] Yet another embodiment of the present invention provides a computer program product for visualizing defects in ferromagnetic material. The computer program product includes a non-transitory computer-readable medium. Computer readable program code is stored on the non-transitory computer-readable medium. When executed by a processor, the program code establishes processes. The processes a process that generates magnetic field data. The magnetic field data characterizes location of the defect on or in the ferromagnetic material. A process drives a display device. The display device is configured to generate an image perceivable by a human. An augmented reality process is coupled to receive the magnetic field data. The augmented reality process causes display, by the display device, of an image. The image represents the magnetic field data. The image is displayed, such that the image registers, as viewed by the human, with the ferromagnetic material.

[0059] The magnetic field data may characterize location of metal missing from the ferromagnetic material.

BRIEF DESCRIPTION OF THE DRAWINGS

[0060] The invention will be more fully understood by referring to the following Detailed Description of Specific Embodiments in conjunction with the Drawings, of which:

[0061] Fig. 1 is a schematic diagram of a system for visualizing defects in ferromagnetic material, according to an embodiment of the present invention, including an illustration of a hypothetical augmented reality scene, as augmented by the system to display a color-coded, three-dimensional defect depth map along a ferromagnetic material (a pipe).

[0062] Fig. 2 is a schematic diagram of the system of Fig. 1, including an illustration of a hypothetical augmented reality scene, as augmented by the system to a display a graphical image of, or an icon representing, missing metal or defect, according to another embodiment of the present invention.

[0063] Fig. 3 illustrates an exemplary arrangement of magnetometers proximate the pipe of Figs. 1 and 2, according to the prior art.

[0064] Fig. 4 is a schematic illustration of an array of magnetometers for scanning the pipe of Figs. 1 and 2, according to the prior art.

[0065] Figs. 5 and 6 are respective isometric and side views of the pipe of Fig. 1-4 showing a hypothetical path taken by the array of magnetometers.

[0066] Fig. 7 is a schematic diagram of the system of Fig. 1, including an illustration of a hypothetical augmented reality scene, as augmented by the system to display a representation of the path of Figs. 5 and 6 taken by the array of magnetometers of Fig. 4, according to another embodiment of the present invention.

[0067] Fig. 8 is a schematic diagram of the system of Fig. 1, including an illustration of a hypothetical augmented reality scene, as augmented by the system to display a graphical image or icon of magnetometer patches on the pipe, according to another embodiment of the present invention.

[0068] Fig. 9 is a schematic diagram of the system of Fig. 1, including an illustration of a hypothetical augmented reality scene, as augmented by the system to display diagnostic information, including an icon representing a failed magnetometer, according to another embodiment of the present invention.

[0069] Fig. 10 is a schematic diagram of a system similar to the system of Fig. 1, but here including a 3D projector in place of a head-mounted display device, according to an embodiment of the present invention.

[0070] Fig. 11 is a schematic diagram of a system similar to the system of Fig. 1, but here including a hand-held tablet or mobile phone with a display screen in place of a head-mounted display device, according to an embodiment of the present invention.

[0071] Fig. 12 shows an exemplary pair of views (left and right) that would be collectively perceived by a human as a 3D image, according to an embodiment of the present invention.

[0072] Fig. 13 is a schematic diagram of the system of Fig. 1, including an illustration of a hypothetical augmented reality scene, as augmented by the system to display a surface plot of relative magnetic field strength along the pipe, according to another embodiment of the present invention.

[0073] Figs. 14 and 15 illustrate hypothetical augmented reality scenes, as augmented by the system of Fig. 1 to display historical information about detected defects, according to an embodiment of the present invention.

[0074] Figs. 16-18 provide flowcharts schematically illustrating a method for visualizing defects in ferromagnetic material, and operations performed by a system for visualizing defects in ferromagnetic material, according to embodiments of the present invention.

DETAILED DESCRIPTION OF SPECIFIC EMBODIMENTS

[0075] Embodiments of the present invention enable a field operator to visualize, as a humanly-visible image, magnetic or other analytical data obtained by a scanning or permanently mounted magnetometry system on a real pipe or other ferromagnetic material, and to follow the image down, layer by layer, as various coverings are removed. These embodiments facilitate precise comparative diagnosis via other inspection tools, such as tools that require direct pipe contact. This collaboration between magnetometry sensing and other sensing modes enables quick and precise location, diagnosis and repair of ferromagnetic materials. Furthermore, after a diagnostic or repair operation has been performed, these embodiments facilitate precise reinstallation of removed sensors to the same locations from which the sensors were removed.

[0076] Fig. 1 is a schematic diagram of a system 100 for visualizing defects in ferromagnetic material, according to an embodiment of the present invention. Fig. 1 includes an illustration of a hypothetical augmented reality scene, as augmented by the system 100. A human user 102 using a suitable display device 104, such as a HoloLens augmented reality visualization (ARV) display from Microsoft Corporation, One Microsoft Way, Redmond, WA 98052-6399, sees a real ferromagnetic pipe 106 and perceives an image 108 representative of magnetic field data.

[0077] In this embodiment, the magnetic field data are represented in the image 108 by a color-coded, three-dimensional defect depth map 110. The image 108 with the defect depth map 110 is generated by the ARV display device 104, such that the defect depth map 110 appears to the user 102 to be registered with the pipe 106. Thus, if the user 102 changes gaze direction or tilt, or the user 102 moves to another location, the image 108 is automatically correspondingly changed.

[0078] The defect depth map 110 includes a surface corresponding to each location at which a measurement has been made or calculated. Height of the surface above a nominal height indicates a depth at which a corresponding defect has been detected. The surfaces may be color-

coded to indicate severity of the defect, such as by coloring surfaces that represent no defect green, moderate defect yellow and severe defect red.

[0079] In other embodiments, the magnetic field data may be represented differently, such as by a computer generated graphical image 200 of, or an icon representing, missing metal or a defect, as shown in Fig. 2. As in the embodiment described with respect to Fig. 1, the graphical image 200 or icon is generated by the ARV display device 104, such that the graphical image 200 or icon appears to the user 102 to be registered with the pipe 106.

[0080] Returning to Fig. 1, the magnetic field data characterizes locations of the defect, such as metal missing from the pipe 106. The location of the defect is determined by a defect detection system 112 that receives signals 114 from magnetometers (not visible) proximate the pipe 106. Fig. 3 illustrates an exemplary arrangement of the magnetometers 300 proximate the pipe 106. The magnetometers 300 may be arranged in arrays ("patches"), such as arrays of 16x16 magnetometers, and the patches may be spaced apart longitudinally and/or circumferentially along and/or around the pipe 106. The magnetometers of a given patch may, but need not, extend all the way around the pipe 106. The '471 and '472 patents describe suitable fixed-in-place magnetometry systems.

[0081] The magnetometers need not, however, be fixed in place, relative to the pipe 106. For example, as shown schematically in Fig. 4, one or more magnetometers, exemplified by magnetometers 400-418, may be arranged in an array 420. The array 420 may be positionable at a standoff distance 422 along a z axis from the ferromagnetic material 106, and translatable along an x axis, to a plurality of scan positions along the ferromagnetic material 106. The array 420 may be a one-, two- or three-dimensional array. The x axis may be perpendicular to the z axis. Thus, the array 420 of magnetometers 400-418 may be scanned above the pipe 106 to detect a defect 424, as described in the '699 and '036 applications.

[0082] It may or may not be possible to maintain a relatively constant standoff distance 422 while scanning along the pipe 106, and it may not be practical to scan the array 420 along a straight line, for example as a result of rugged terrain through which the pipe extends and jostling of a vehicle, or stride of a human, transporting the array 420. For example, as the array 420 scans generally along the length of the pipe 106, the standoff distance 422 may vary, and the "clock angle" 426 of the array 420 (i.e., position of the array 420 around the pipe 106, as seen in

a cross-sectional view of the pipe 106) may vary. For example, the array 420 may follow a non-straight path 500, as shown in isometric view in Fig. 5 and in side view in Fig. 6.

[0083] Returning again to Fig. 1, an augmented reality system 116 receives the magnetic field data 118 from the defect detection system 112 and causes the display device 104 to display the image 108 containing the defect depth map 110 or other indicator. The augmented reality system 116 may be initialized with data 120 about reference points in areas of a facility where the inspection system 100 is expected to be used. For example, fiducials, exemplified by fiducials 122, 124 and 126, in the facility may be used to initialize the augmented reality system 116, as known in the art. In this case, the data 120 may contain information about the fiducials 122-126. Alternatively, other known initialization techniques may be used, such as those involving global position system (GPS) receivers, star trackers, inertial navigation systems (INSs), etc. In this way, fixed, known reference points may be registered in the system 100, and these reference points may serve to place various magnetometry systems, with respect to the plant, specific pipes and locations on those pipes.

[0084] For a scanning magnetometry system, such as the system discussed with respect to Figs. 4-6, the scan itself can be recorded by the system 100, such as by the defect detection system 112, for example in a path recording database 128 (Fig. 1), and this recording 128 may serve to place the resulting data into a reference frame, relative to the pipe 106. This allows virtual imaging of the detected magnetic fields and processed information directly onto the real pipe 106, which guides next steps of a more detailed investigation or repair of the pipe. In addition, this imaging by the system 100 provides a detailed "odometer" function that not only captures motion of the magnetometer array 420 along the pipe 106, but also traces clock angles that the scanner's path 500 traces out, and any other anomalous motions, which can later be removed via correction algorithms. Fig. 7 includes an illustration of the hypothetical augmented reality scene of Fig. 1, as augmented by the system 100 to show an indication 700 of the path 500 (Figs. 5-6) taken by the array 420, such that the indication 700 of the path 500 registers, as viewed by the human 102, with the ferromagnetic material (pipe 106). Although only one path 500 is indicated in Fig. 7, if the array 420 made multiple scans along the pipe 106, each of these scans may be indicated by a separate line in the augmented image, for example to facilitate correlating the multiple scans to verify effectiveness of a motion compensation algorithm used by the defect detection system 112.

[0085] For a more permanently mounted magnetometry system, such as discussed with respect to Fig. 3, the ARV images 108 may be used to quickly locate the magnetometer patches in the field by superposing a computer-generated graphical image or icon 800 of the magnetometer patches on the pipe 106, as though the pipe 106 were transparent, as shown in Fig. 8. This facilitates locating magnetometers that are located on the far side of the pipe 106 from the user 102 and, therefore, not otherwise visible to the user 102. This also facilitates locating and excavating magnetometers and pipes that are buried in the ground, because the system 100 can treat the ground as transparent to enable the user 102 to visualize the magnetometers while they are still buried. Optionally or alternatively, the augmented reality system 116 may display a computer-generated graphical image or icon to represent the pipe 106 while it is still buried.

[0086] The system 100 stores information about the locations of the magnetometers, so the graphical image or icon 800 of the magnetometer patch may be displayed, as shown in Fig. 8, even if the magnetometers are removed from the pipe 106, such as may be necessary to access the surface of the pipe 106 to perform a further diagnostic step or a repair step. For example, once a defect has been identified by the defect detection system 112, the user 102 may wish to perform a further diagnostic test with a surface-contact ultrasonic tester. Removal of the magnetometer patch is typically necessary to enable the ultrasonic tester to contact the surface of the pipe 106. After the further diagnostic test or repair has been completed, the magnetometer patch should be replaced in the same place from which it was removed, to ensure comparability of subsequent measurements to previous measurements. The display of the graphical image or icon 800 of the magnetometer patch, in its previous location, facilitates replacing the magnetometers in their proper positions.

[0087] The system 100 may display system diagnostic information, such as an indication of a failed magnetometer, as shown in Fig. 9. For example, the icon 900 for the failed magnetometer may be displayed in a different color from the other magnetometer icons 901. Optionally, an additional icon, such as an arrow 902, may be displayed to call the user's attention to the icon 900 of the failed magnetometer. Optionally, other information, such as a magnetometer patch identification number, installation date, manufacturer, etc., (not shown) may be displayed as text by the augmented reality system 116 in the display device 104. Similarly, the system 100 may display system diagnostic information about fault codes, battery charge level,

energy harvester performance or about another subsystem, such as a wireless computer network used to communicably link the magnetometers together or to a central system.

[0088] As discussed with respect to Fig. 1, the display device 104 may include a head-mounted display, such as the aforementioned HoloLens augmented reality visualization display. The display device 104 may generate a monoscopic image (i.e., one image, or identical images for both eyes) for the user 102. However, a display device 104 that generates a stereoscopic image (i.e., a different image for each eye) is preferred.

Alternative Display Devices

[0089] As used herein, head-mounted display means a display device that is configured to be supported by a human head and stimulate eyes of the head. Examples include the aforementioned HoloLens ARV display, as well as Google Glass optical head-mounted display, Moverio BT-200 wearable display from Epson and smart contact lenses described by Samsung in Korean Patent Document No. 10-2016-0037008, titled "Smart contact lens for augmented reality and its manufacturing and operation method," the entire contents of which are hereby incorporated by reference herein, for all purposes.

[0090] Augmented reality visualization display devices typically enable a user to directly visually perceive the real world, such as through a transparent screen, and overlay graphical images over the user's view of the real world. Instead of such a display device, the display device 104 (Fig. 1) may include a virtual reality display device, which blocks the user's direct view of the real world. In such an embodiment, the virtual reality display device may include a camera to image the real world, and the virtual reality display device may display the image of the real world overlaid with the augmented reality image 108. Suitable virtual reality display devices include Rift virtual reality system, available from Oculus VR, LLC, augmented as needed with a digital camera.

[0091] Rather than a head-mounted display device 104, as discussed with respect to Fig. 1, some embodiments, exemplified by a system 1000 shown in Fig. 10, include a 3D projector 1002. The 3D projector 1002 may be, for example, a holographic projector, or any suitable projector capable of projecting an image 1008 that is perceivable by the human 102 as a 3D image. Some suitable 3D projectors require the user 102 to wear special glasses to be able to perceive the 3D image.

[0092] In yet some other embodiments, exemplified by a system 1100 shown in Fig. 11, a hand-held device 1102, such as a tablet computer or mobile phone with a display screen, may be used as the display device. The display screen of the hand-held device 1102 is shown enlarged at 1104. In Fig. 11, the pipe 106 is assumed to be covered by cladding, hence the magnetometers are not directly visible to the user 102. The hand-held device 1102 may include a camera 1106 on the back of the hand-held device 1102, hence not visible in Fig. 11, and the display device may be configured to display an image captured by the camera, overlaid with the image 108 representing the magnetic field data.

[0093] A stereoscopic display device can cause the human user 102 to perceive a 3D image by presenting slightly different views of an object to the human's two eyes, as well known. Fig. 12 shows an exemplary pair of views 1200 (left) and 1202 (right) that would be collectively perceived by a human as a 3D image. The hand-held device 1102 (Fig. 11) may generate a 3D image by splitting the screen left-and-right into two subscreens, with the user 102 simultaneously viewing each subscreen with a respective eye. An appropriate holder for the hand-held device 1102, such as Pinć smartphone case available from Cordon Development Labs, Toronto, Canada, facilitates such an operation, effectively turning the hand-held device 1102 into a stereoscopic vision display screen.

[0094] Fig. 13 illustrates yet another type of image 108 the system 100 may generate to represent the magnetic field data. In this embodiment, the magnetic field data are represented by a surface plot 1310 of relative magnetic field strength, after residual magnetic fields, such as from welds, have been automatically removed by the defect detection system 112, as discussed in the '471 and '472 patents. A defect is indicated by a characteristic shape 1312 in the surface plot 1310. Optionally, the surface plot 1310 may be partially transparent (not shown), so the pipe 106 may be more clearly seen.

[0095] Figs. 14 and 15 illustrate hypothetical augmented reality scenes, as augmented by the system of Fig. 1 to display historical information about detected defects or a condition of the ferromagnetic material in general. In Figs. 14 and 15, the augmented reality system 116 causes the display device 104, 1002 or 1102 to display a graph 1400 of pipe wall thickness over time, as well as the current wall thickness 1402, as estimated by the defect detection system 112. The display includes information 1404 identifying the magnetometer proximate the location on the pipe 106 where the wall thickness estimates have been calculated. The graph 1400 may include a

dashed line 1406 indicating a predetermined value, such as a value below which the wall thickness warrants repair. Wall thicknesses less this predetermined value may trigger the system 100 to highlight corresponding portions of the magnetic field data. For example, the system 100 may color corresponding portions of the defect depth plot 110 (Fig. 1) different, such as red, from other portions of the plot 110.

[0096] Returning to Figs. 14 and 15, the background of the information 1404 identifying the magnetometer may be color coded. For example, if the current estimated wall thickness is less than the predetermined value 1406, as in Fig. 14, the background may be red, whereas if the current estimated wall thickness is greater than the predetermined value 1406, as in Fig. 15, the background may be black. The display may include a line 1408 extending from the graph 1400 to the icon representing the magnetometer identified in the information 1404.

[0097] Figs. 16-18 provide flowcharts schematically illustrating a method 1600 for visualizing defects in ferromagnetic material, and operations performed by a system for visualizing defects in ferromagnetic material. At 1602, magnetic field data characterizing location of the defect on or in a ferromagnetic material is generated. The defect may be metal missing from the ferromagnetic material. Fig. 17 contains a flowchart of operations that may be performed to generate the magnetic field data. For example, in some embodiments, at 1700, magnetometers are provided. The magnetometers are disposed proximate a surface of the ferromagnetic material and fixed in position, relative to the ferromagnetic material. In some embodiments, at 1702, magnetometers that are arranged in an array are provided. At 1704, the array is positioned at a standoff distance from the ferromagnetic material. At 1706, the array is translated along an axis to a plurality of scan positions along the ferromagnetic material.

[0098] Returning to Fig. 16, at 1604, a display device is provided. The display device may include a head-mounted display that provides stereoscopic vision. The display device may include a 3D projector, such as a holographic projector. The display device may include a hand-held device having a display screen. The display screen may include a stereoscopic vision display screen.

[0099] Optionally, at 1606, a camera is provided. Optionally, at 1608, the camera captures an image of the real world. Optionally, at 1610, the camera image of the real world is overlaid with the image representing the magnetic field data.

[0100] At 1612, an augmented reality system is provided. At 1614, the augmented reality system causes the display device to display an image representing the magnetic field data, such that the image registers with the ferromagnetic material. Fig. 18 contains a flowchart of operations that may be performed to display the image. For example, in some embodiments, at 1800, a first icon representing a plurality of magnetometers is displayed. In some embodiments, at 1802, a second icon, visually distinct from the first icon, is displayed to represent a failed magnetometer.

[0101] In some embodiments, at 1804, historical information about the magnetic field data is displayed. For example, a graph of estimated thickness of the ferromagnetic material over time may be displayed. In some embodiments, at 1806, a graph representing relative strength of a magnetic field is displayed. In some embodiments, at 1808, a graphical representation of missing metal or defect is displayed. In some embodiments, at 1810, one or more of the following is displayed: a fault code, battery charge level information, a system serial number, sensor array identification information, system diagnostic information, geolocation information about the magnetic field data and/or a failed sensor indicator. The geolocation information may include, for example, latitude and longitude (or other coordinates) of a defect, magnetometer, magnetometer array or section of pipe hosing a defect. In some embodiments, at 1812, an indication of a path taken by the array of magnetometers is displayed.

[0102] Thus, embodiments of the present invention may use augmented reality technology to virtually overlay onto a physical scene a depth contour map, or other information, that the magnetometer array has observed. The magnetometry data from the array may be loaded into the augmented reality system, and the augmented reality system, based on previous tagging of local landmarks to provide a spatial reference frame, can overlay in 3D this defect map onto the array, or the insulation, or the pipe coating, or the pipe itself (as layers are removed), and then be used to visually guide a validating independent inspection process. Furthermore, this visual reference process can be used to accurately place the sensor array back in its original location, even though all references on the insulation may have been lost when the insulation was removed or destroyed. This return-to-original-location is useful to enable continued observation of changes in the pipe area that is under the sensor array, relative to historical data previously collected.

[0103] The system includes augmented reality display hardware, which may include a projector, and an augmented reality visualization system coupled to the augmented reality display hardware. The augmented reality visualization system is also coupled to the defect detection system. The ARV system is configured to display to a user, via the display hardware, an image of, or other information about, a defect that corresponds to a plurality of data points identified by the defect detection system. The image is displayed so as to coincide with a location proximate the surface of the ferromagnetic material where the data points were identified. That is, when a user gazes at the location on the ferromagnetic material output by the defect detection system, the augmented reality visualization system generates the image of the defect or other information, so the user visualizes the defect or other information on or in the ferromagnetic material. In some embodiments, when a user gazes at the location on the ferromagnetic material output by the defect detection system, the augmented reality visualization system generates the image of the defect, so the image is superimposed on the user's view of the actual ferromagnetic material, and the image of the defect registers on the location of the defect in the ferromagnetic material.

[0104] While the invention is described through the above-described exemplary embodiments, modifications to, and variations of, the illustrated embodiments may be made without departing from the inventive concepts disclosed herein. For example, although specific parameter values, such as dimensions and materials, may be recited in relation to disclosed embodiments, within the scope of the invention, the values of all parameters may vary over wide ranges to suit different applications. Unless otherwise indicated in context, or would be understood by one of ordinary skill in the art, terms such as "about" mean within $\pm 20\%$.

[0105] As used herein, including in the claims, the term "and/or," used in connection with a list of items, means one or more of the items in the list, i.e., at least one of the items in the list, but not necessarily all the items in the list. As used herein, including in the claims, the term "or," used in connection with a list of items, means one or more of the items in the list, i.e., at least one of the items in the list, but not necessarily all the items in the list. "Or" does not mean "exclusive or."

[0106] Although aspects of embodiments may be described with reference to flowcharts and/or block diagrams, functions, operations, decisions, etc. of all or a portion of each block, or a combination of blocks, may be combined, separated into separate operations or performed in

other orders. References to a "module" are for convenience and not intended to limit its implementation. All or a portion of each block, module or combination thereof may be implemented as computer program instructions (such as software), hardware (such as combinatorial logic, Application Specific Integrated Circuits (ASICs), Field-Programmable Gate Arrays (FPGAs), processor or other hardware), firmware or combinations thereof.

[0107] The defect detection system and/or the augmented reality visualization system, or portions thereof, may be implemented by one or more processors executing, or controlled by, instructions stored in a memory. Each processor may be a general purpose processor, such as a central processing unit (CPU), a graphic processing unit (GPU), digital signal processor (DSP), a special purpose processor, etc., as appropriate, or combination thereof.

[0108] The memory may be random access memory (RAM), read-only memory (ROM), flash memory or any other memory, or combination thereof, suitable for storing control software or other instructions and data. Instructions defining the functions of the present invention may be delivered to a processor in many forms, including, but not limited to, information permanently stored on tangible non-transitory non-writable storage media (e.g., read-only memory devices within a computer, such as ROM, or devices readable by a computer I/O attachment, such as CD-ROM or DVD disks), information alterably stored on tangible non-transitory writable storage media (e.g., floppy disks, removable flash memory and hard drives) or information conveyed to a computer through a communication medium, including wired or wireless computer networks. Moreover, while embodiments may be described in connection with various illustrative data structures, systems may be embodied using a variety of data structures.

[0109] Disclosed aspects, or portions thereof, may be combined in ways not listed above and/or not explicitly claimed. In addition, embodiments disclosed herein may be suitably practiced, absent any element that is not specifically disclosed herein. Accordingly, the invention should not be viewed as being limited to the disclosed embodiments.

CLAIMS

What is claimed is:

1. A system 100, 1000, 1100 for visualizing defects in ferromagnetic material 106, the system comprising:

a source 112 of magnetic field data 118, the magnetic field data 118 characterizing location of the defect in the ferromagnetic material 106;

a display device 104, 1002, 1102 configured to generate an image perceivable by a human 102; and

an augmented reality system 116 coupled to receive the magnetic field data 118 and cause display, by the display device 104, 1002, 1102 of an image 108, 1008 representing the magnetic field data 118, such that the image 108, 1008 registers, as viewed by the human 102, with the ferromagnetic material 102.

2. A system 100, 1000, 1100 according to claim 1, wherein the magnetic field data 118 characterizes location of metal missing from the ferromagnetic material 106.

3. A system 100, 1000, 1100 according to any previous claim, wherein the display device 104, 1002, 1102 comprises:

a head-mounted display, optionally wherein the head-mounted display comprises a stereoscopic vision display device; and/or

a 3D projector 1002, optionally wherein the 3D projector comprises a holographic projector; and/or,

a hand-held device 1102 comprising a display screen, optionally wherein the display screen comprises a stereoscopic vision display screen.

4. A system 100, 1000, 1100 according to any previous claim, wherein the display device 104, 1002, 1102 further comprises a camera 1106, and the display device 104, 1002, 1102 is configured to display an image captured by the camera 1106, overlaid with the image 108, 1008 representing the magnetic field data 118.

5. A system 100, 1000, 1100 according to any previous claim, wherein the image 108, 1008 representing the magnetic field data 118 comprises:

first icons 800, 901 representing magnetometers that detected a magnetic field proximate the ferromagnetic material 106 and from which the magnetic field data 118 was derived, such that the first icons 800, 901 register, as viewed by the human 102, with the ferromagnetic material 106, optionally wherein the image 108, 1008 representing the magnetic field data 118 comprises a second icon 900, 902 visually distinct from the first icons 800, 901, representing a failed magnetometer; and/or

historical information 1400 about the magnetic field data 118, optionally wherein the historical information comprises a thickness graph showing estimated thickness of the ferromagnetic material 106 over time; and/or

a relative field strength graph 1310 representing relative strength of a magnetic field proximate the ferromagnetic material 106 and from which the magnetic field data 118 was derived, such that the relative field strength graph 1310 registers, as viewed by the human 102, with the ferromagnetic material 106; and/or

a graphical representation 200 of the defect in the ferromagnetic material 106, such that the graphical representation 200 registers, as viewed by the human 102, with the ferromagnetic material 106; and/or

an indication 700 of a path 500 taken by an array 420 of magnetometers, such that the indication 700 of the path 500 registers, as viewed by the human 102, with the ferromagnetic material 106; and/or

geolocation information about the magnetic field data represented in the image; and/or

a fault code; and/or

battery charge level information; and/or

a system serial number; and/or

sensor array identification information; and/or

system diagnostic information; and/or

a failed sensor indicator 900, 902.

6. A system 100, 1000, 1100 according to any previous claim, wherein the source 112 of magnetic field data 118 comprises:

a plurality of magnetometers 300 disposed proximate a surface of the ferromagnetic material 106, wherein each magnetometer of the plurality of magnetometers 300 is fixed in position, relative to the ferromagnetic material 106; and/or

a plurality of magnetometers 400-418 arranged in an array 420, the array 420 being positionable at a standoff distance 422 from the ferromagnetic material 106 and translatable along an axis X to a plurality of scan positions along the ferromagnetic material 106.

7. A method 1600 for visualizing defects in ferromagnetic material 106, the method comprising:

generating 1602 magnetic field data 118, the magnetic field data 118 characterizing location of the defect in the ferromagnetic material 106;

coupling 1612 an augmented reality system 116 to receive the magnetic field data 118;

coupling 1604 a display device 104, 1002, 1102, configured to generate an image perceivable by a human 102, to the augmented reality system 116; and

displaying 1614, by the display device 104 an image 108, 1008 representing the magnetic field data 118, such that the image 108, 1008 registers, as viewed by the human 102, with the ferromagnetic material 106.

8. A method according to claim 7, wherein the magnetic field data characterizes location of metal missing from the ferromagnetic material.

9. A method according to at least one of claims 7 to 8, wherein coupling the display device 104, 1002, 1102 comprises:

coupling a head-mounted display, optionally wherein the head-mounted display comprises a stereoscopic vision display device; and/or

coupling a 3D projector 1002, optionally wherein the 3D projector comprises a holographic projector; and/or

coupling a hand-held device 1102 comprising a display screen, optionally wherein the display screen comprises a stereoscopic vision display screen.

10. A method according to at least one of claims 7 to 9, further comprising:

displaying 1608, by the display device, an image captured by a camera 1106; and

overlaying 1610 the image captured by the camera 1106 with the image 108, 1008 representing the magnetic field data 118.

11. A method according to at least one of claims 7 to 10, wherein displaying the image representing the magnetic field data comprises:

displaying 1800 first icons 800, 901 representing magnetometers that detected a magnetic field proximate the ferromagnetic material 106 and from which the magnetic field data 118 was derived, such that the first icons 800, 901 register, as viewed by the human 102, with the ferromagnetic material 106, and optionally displaying 1802 a second icon 900, 902, visually distinct from the first icons 800, 901, representing a failed magnetometer; and/or

displaying 1803 historical information 1400 about the magnetic field data 118, optionally wherein the historical information 1400 comprises a thickness graph showing estimated thickness of the ferromagnetic material 106 over time; and/or

displaying 1804 a relative field strength graph 1310 representing relative strength of a magnetic field proximate the ferromagnetic material 106 and from which the magnetic field data 118 was derived, such that the relative field strength graph 1310 registers, as viewed by the human 102, with the ferromagnetic material 106; and/or

displaying 1806 a graphical representation 200 of the defect in the ferromagnetic material 102, such that the graphical representation 200 registers, as viewed by the human 102, with the ferromagnetic material 106; and/or

displaying geolocation information about the magnetic field data 118 represented in the image; and/or

displaying an indication 700 of a path 500 taken by an array 420 of magnetometers, such that the indication 700 of the path 500 registers, as viewed by the human 102, with the ferromagnetic material 106; and/or

displaying a fault code; and/or

displaying battery charge level information; and/or

displaying a system serial number; and/or

displaying sensor array identification information; and/or

displaying system diagnostic information; and/or

displaying a failed sensor indicator 900, 902.

12. A method according to at least one of claims 7 to 11, wherein generating the magnetic field data comprises:

obtaining data from a plurality of magnetometers 300 disposed proximate a surface of the ferromagnetic material 106, wherein each magnetometer of the plurality of magnetometers 300 is fixed in position, relative to the ferromagnetic material 106; and/or

obtaining data from a plurality of magnetometers 400-418 arranged in an array 420, positioned at a standoff distance 422 from the ferromagnetic material 106 and translated along an axis X to a plurality of scan positions along the ferromagnetic material 106.

13. A storage medium storing computer program instructions that, when executed by a processing device, cause the processing device to perform a method as set out in at least one of claims 7 to 12.

14. A storage medium according to claim 13, wherein the magnetic field data characterizes location of metal missing from the ferromagnetic material.

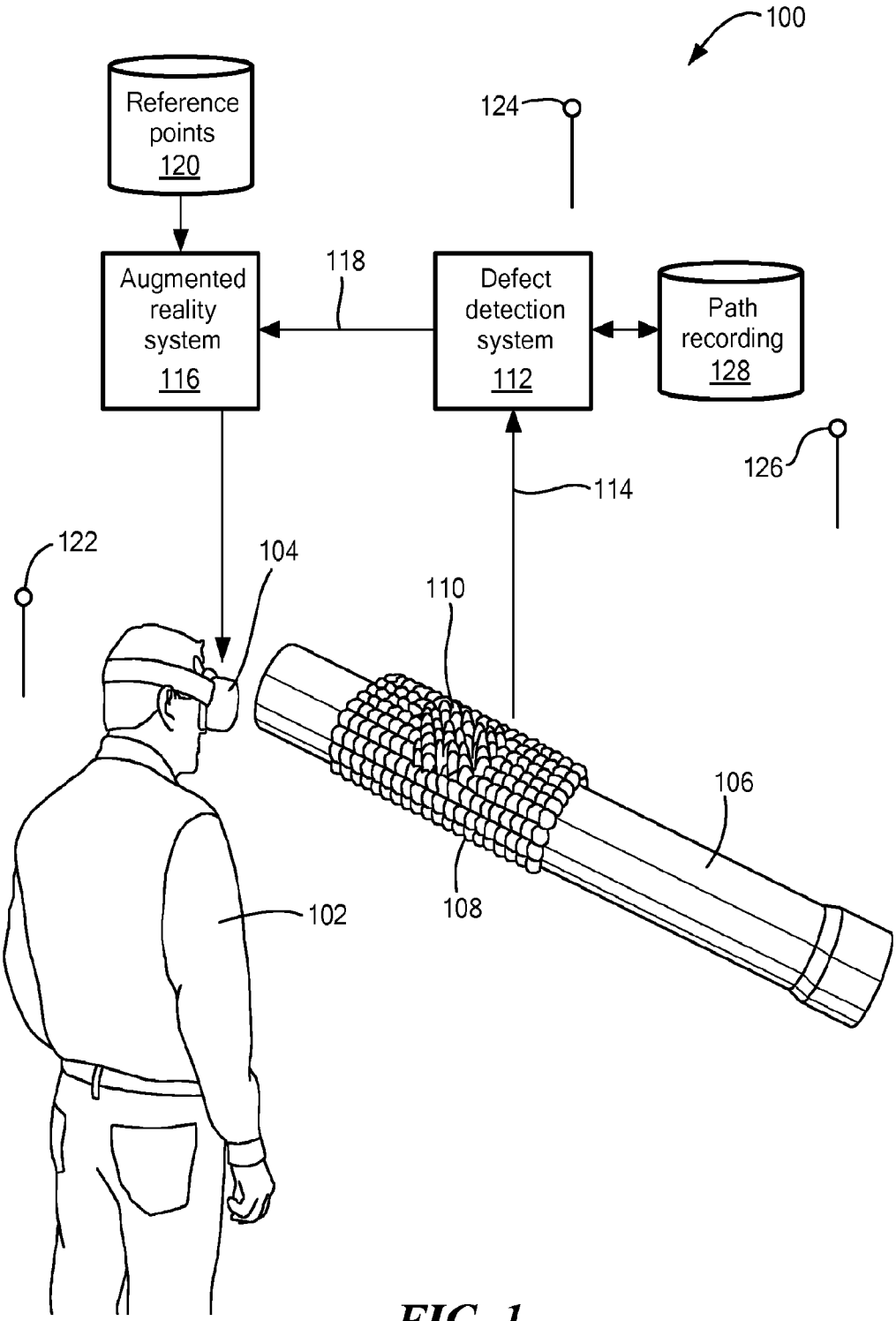
100
Reference points 120
124
Augmented reality system 116
118
Defect detection system 112
Path recording 128
126
114
122
104
110
106
102
108

FIG. 1

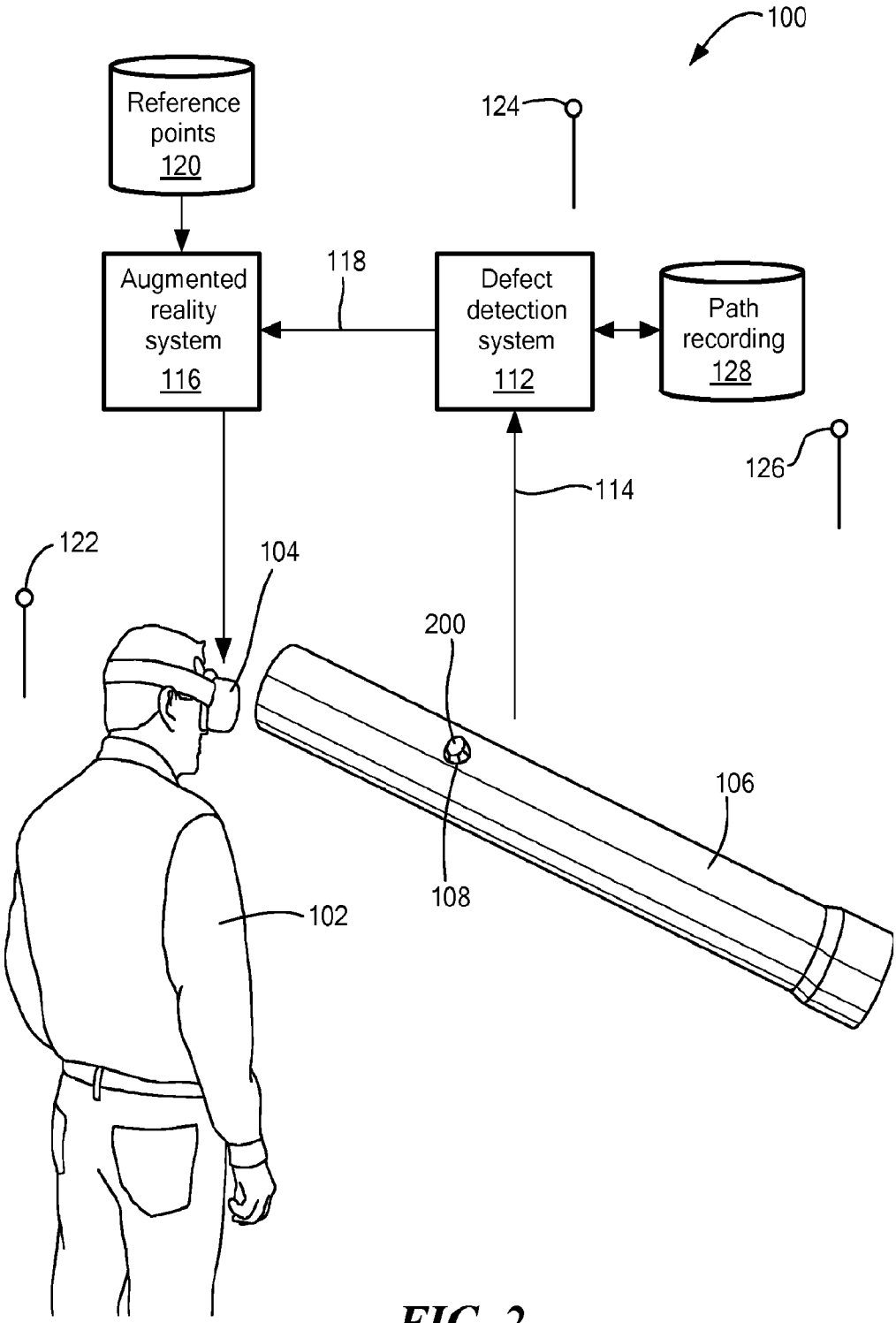
100
Reference points 120
124
Augmented reality system 116
118
Defect detection system 112
Path recording 128
126
114
122
104
200
106
108
102

FIG. 2

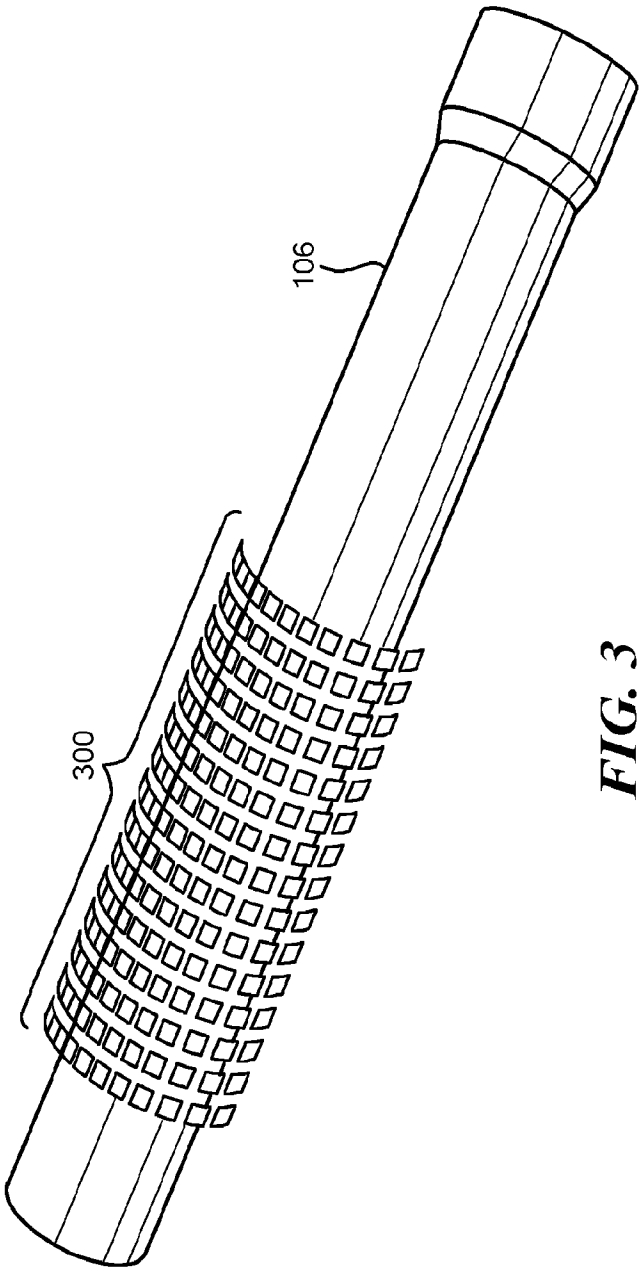

FIG. 3
(Prior Art)

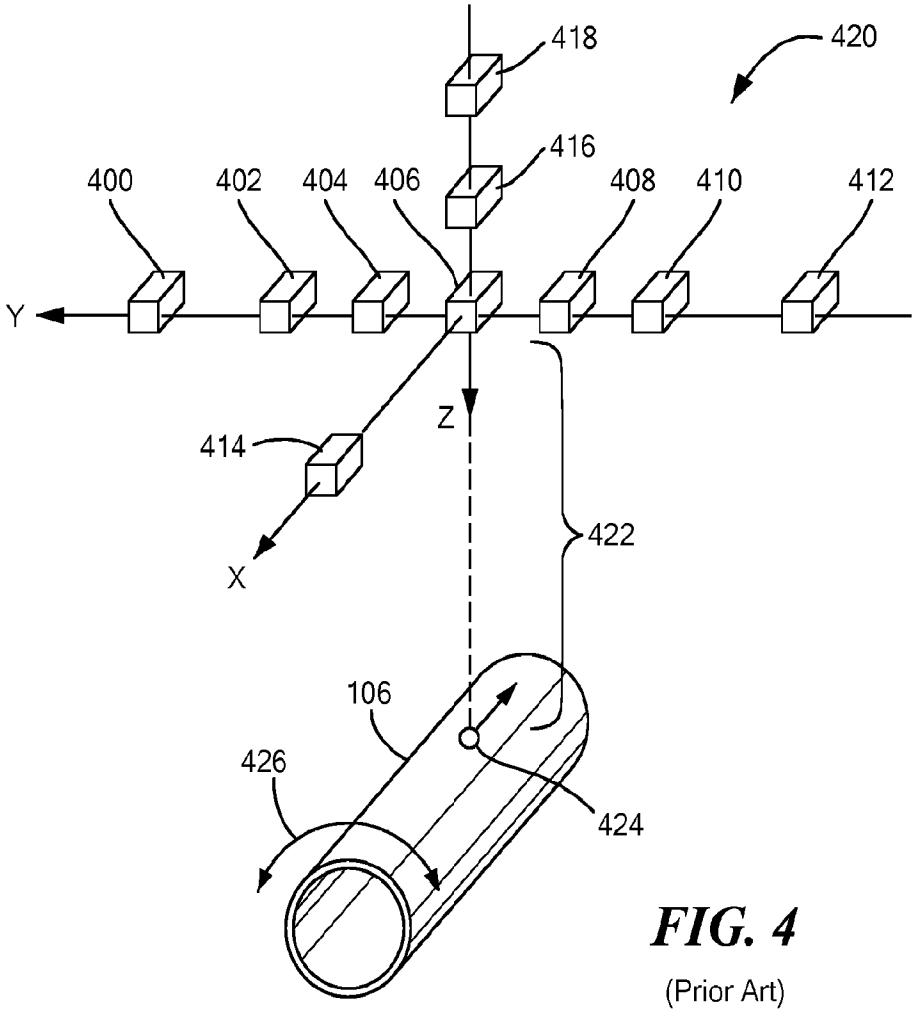

FIG. 4
(Prior Art)

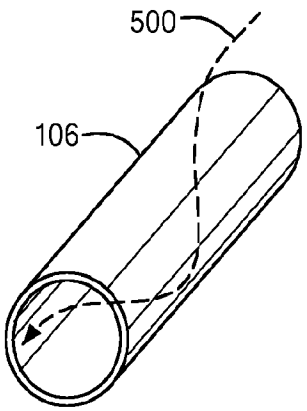

FIG. 5

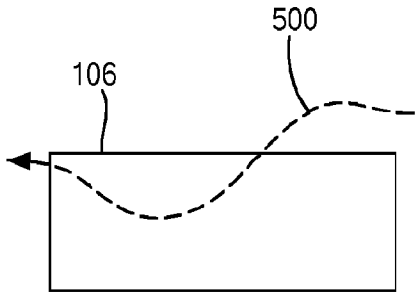

FIG. 6

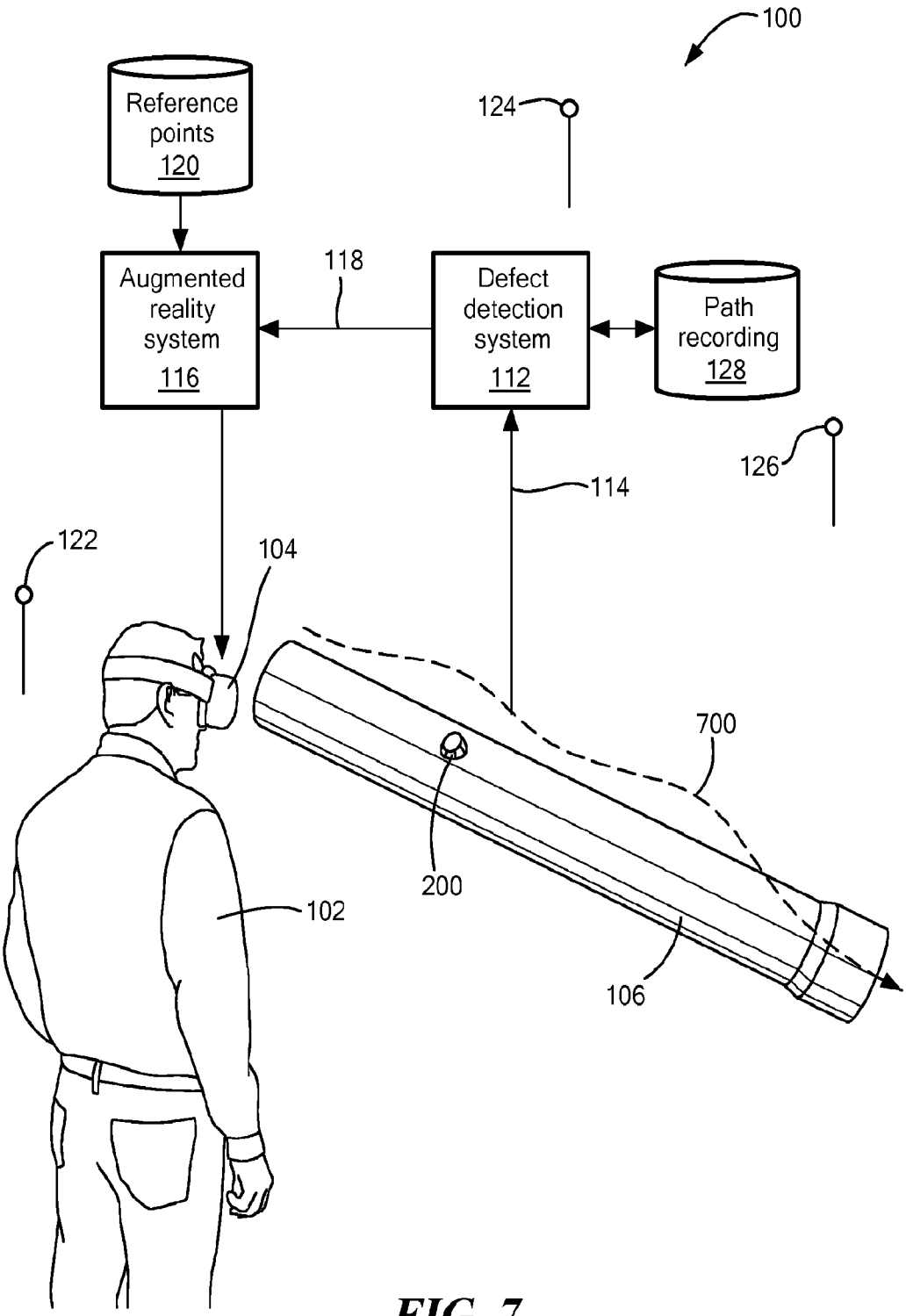
100
Reference points 120
124
Augmented reality system 116
118
Defect detection system 112
Path recording 128
126
114
122
104
700
200
102
106

FIG. 7

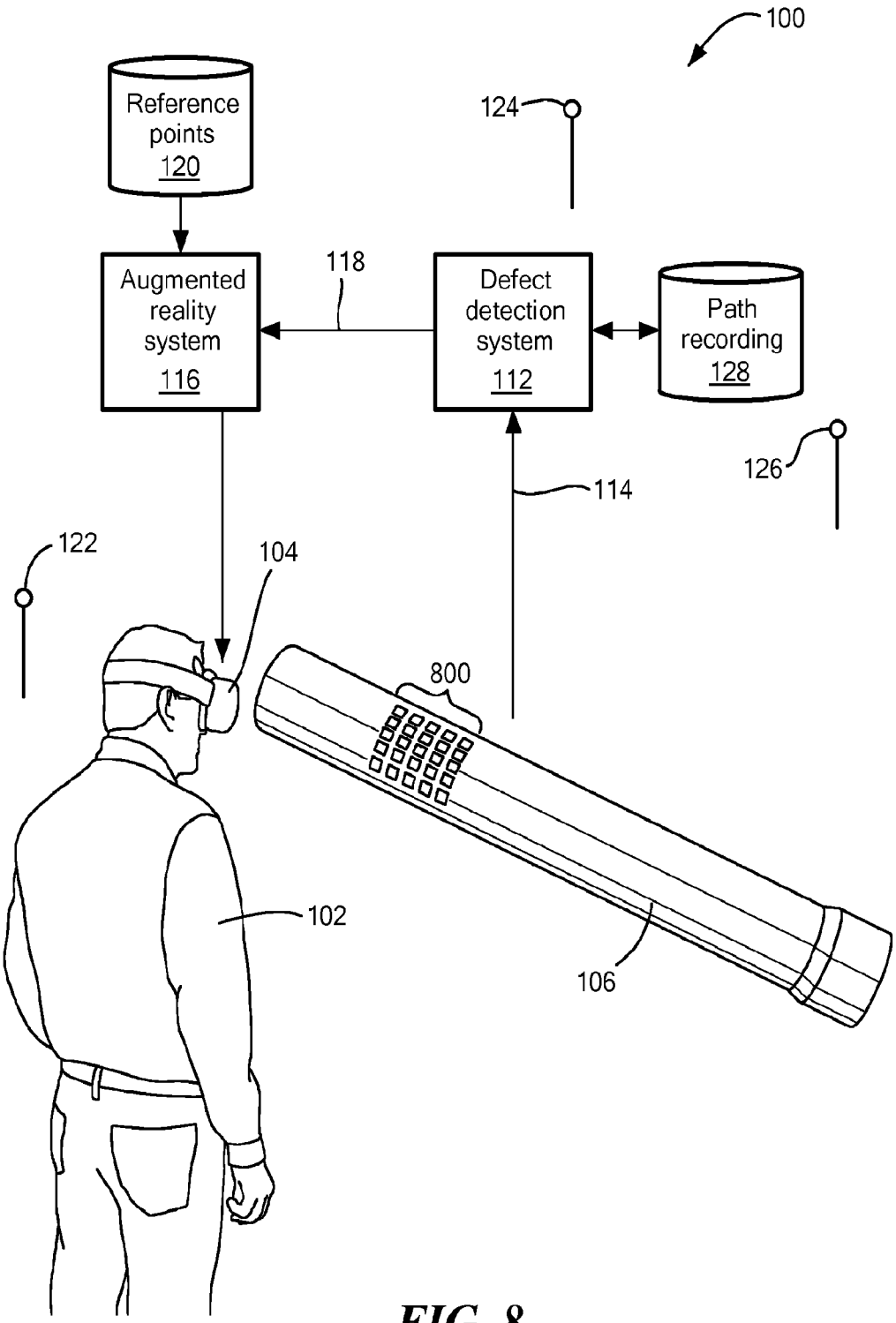
100
Reference points 120
124
Augmented reality system 116
118
Defect detection system 112
Path recording 128
126
114
122
104
800
102
106

FIG. 8

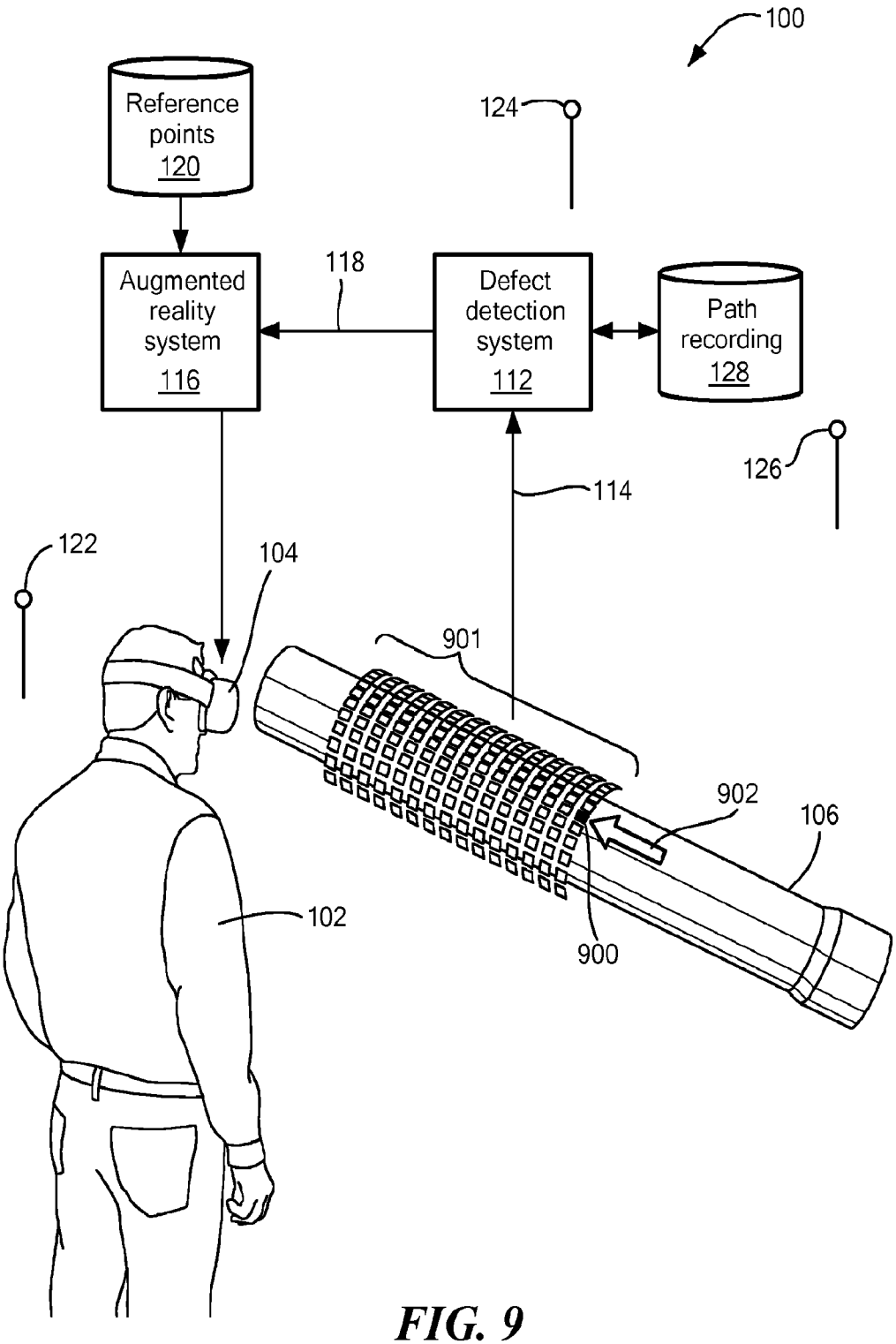
100
Reference points 120
124
Augmented reality system 116
118
Defect detection system 112
Path recording 128
126
114
122
104
901
902
106
102
900

FIG. 9

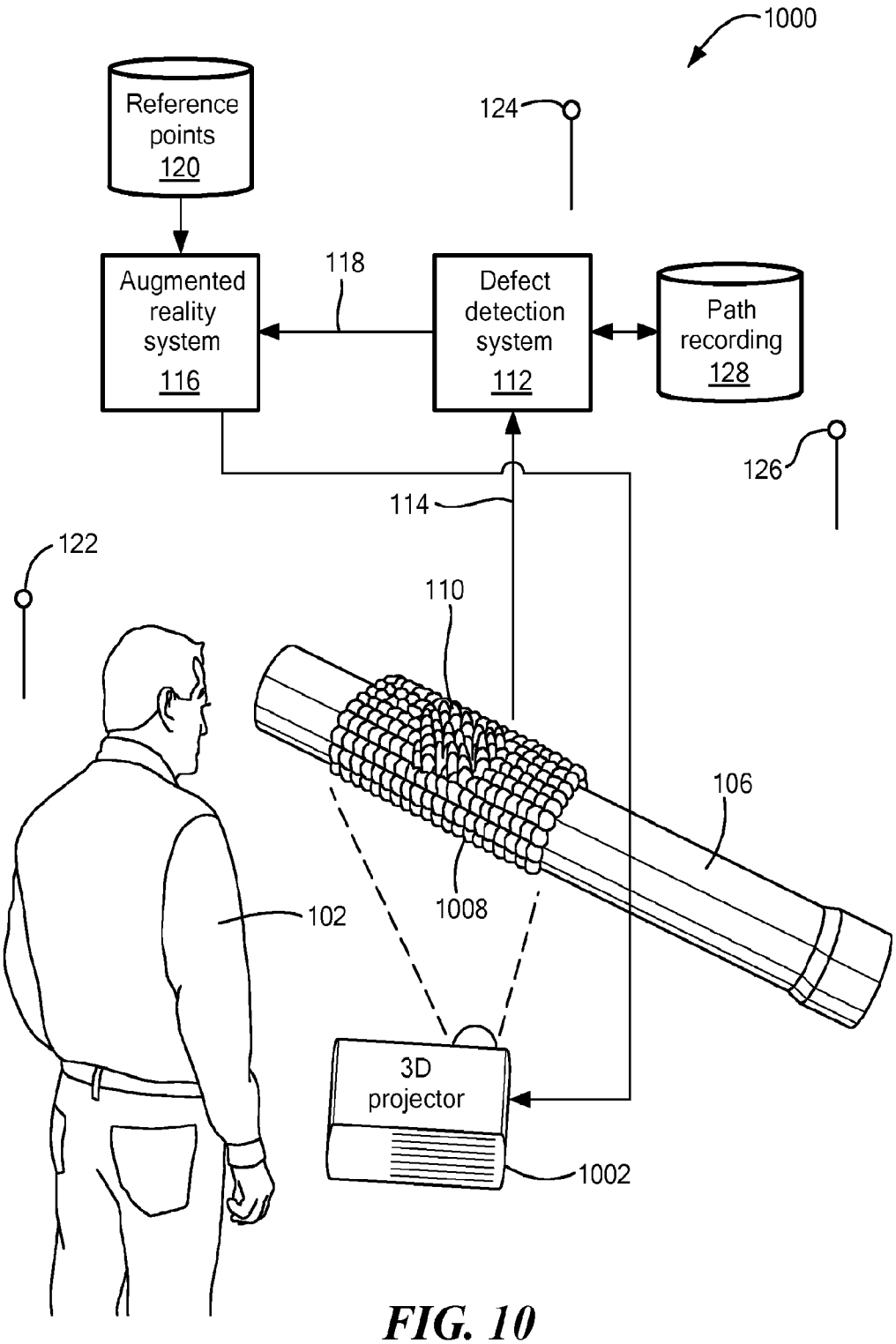
1000
Reference points 120
124
Augmented reality system 116
118
Defect detection system 112
Path recording 128
126
114
122
110
106
1008
102
3D projector
1002

FIG. 10

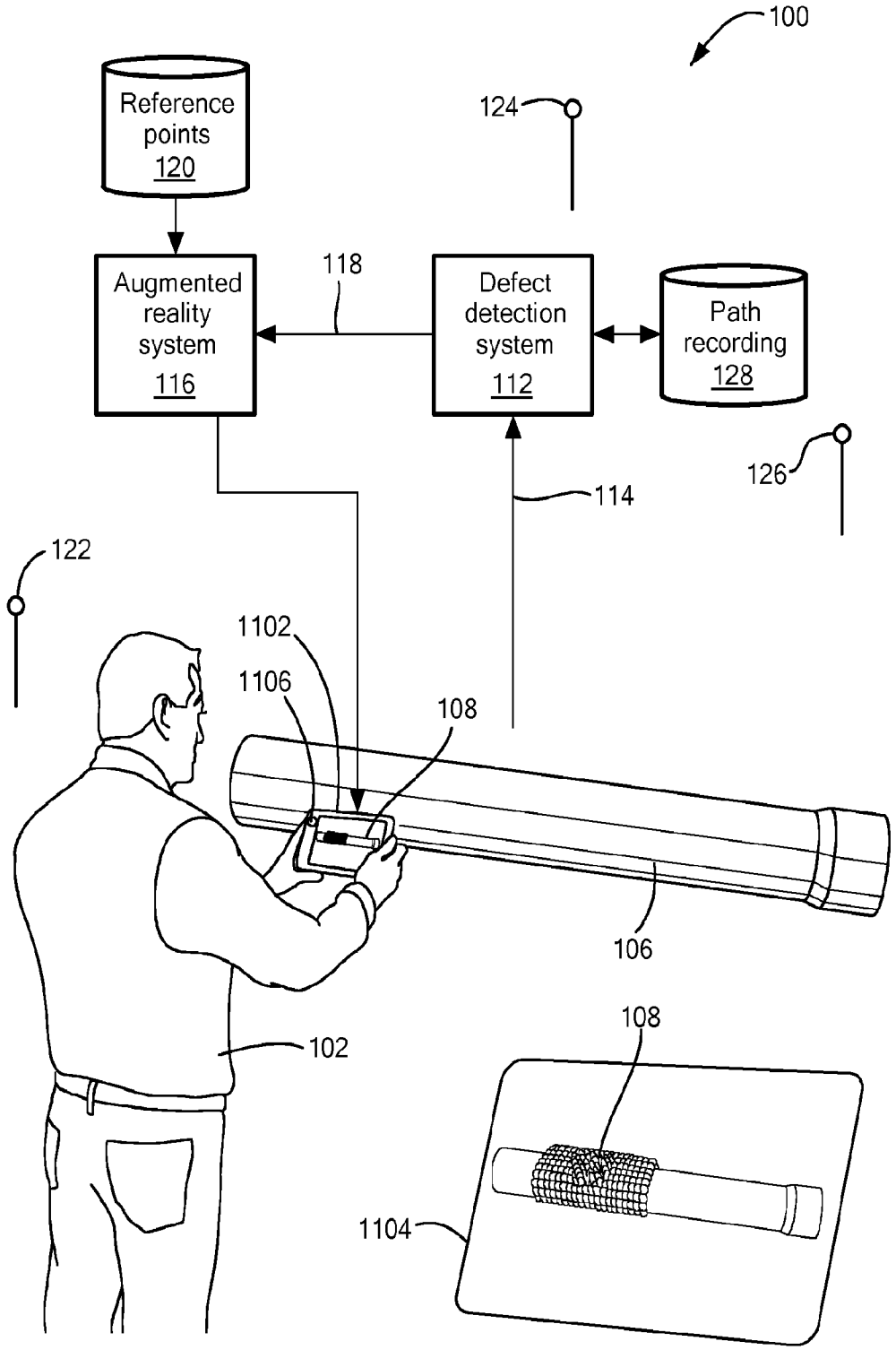
100
Reference points 120
124
Augmented reality system 116
118
Defect detection system 112
Path recording 128
126
114
122
1102
1106
108
106
102
108
1104

FIG. 11

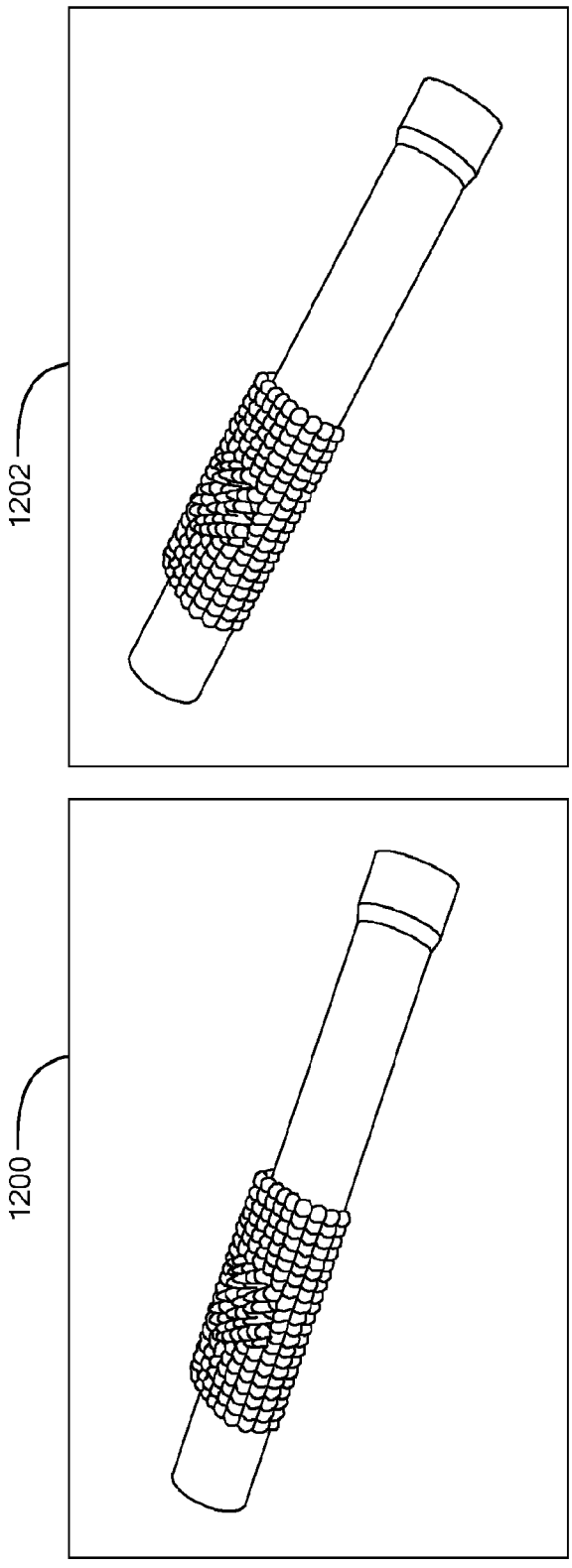

FIG. 12

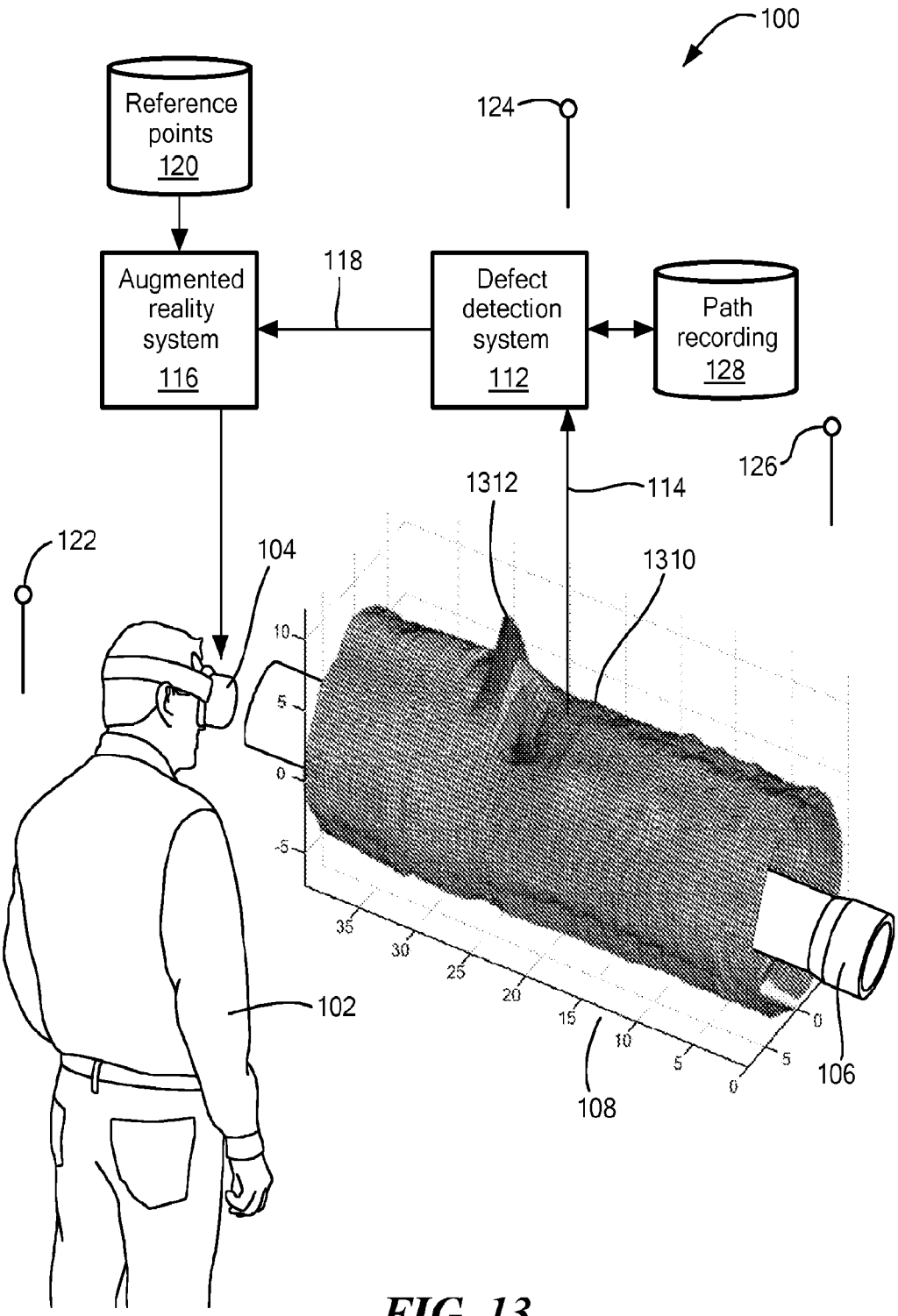
100
Reference points 120
124
Augmented reality system 116
118
Defect detection system 112
Path recording 128
126
1312
114
122
104
1310
102
108
106

FIG. 13

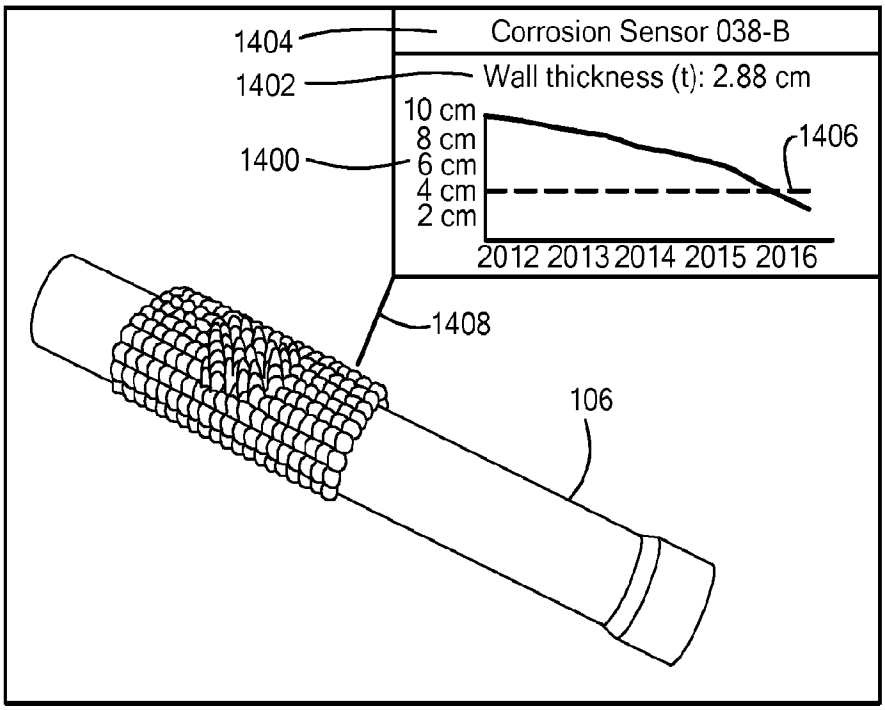
1404
Corrosion Sensor 038-B
1402
Wall thickness (t): 2.88 cm
10 cm
8 cm
6 cm
4 cm
2 cm
1400
1406
2012 2013 2014 2015 2016
1408
106

FIG. 14

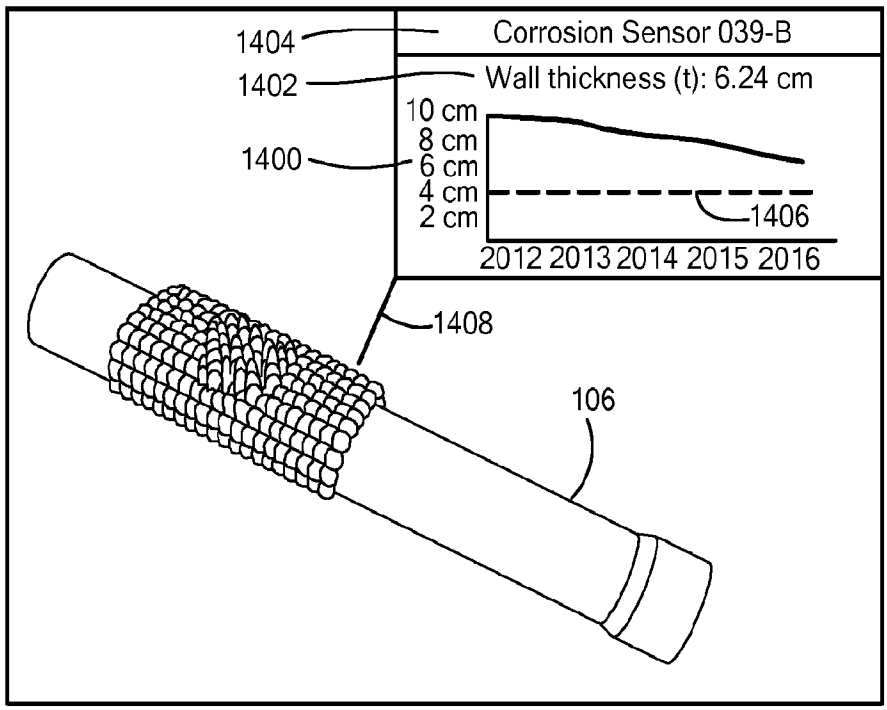
1404
Corrosion Sensor 039-B
1402
Wall thickness (t): 6.24 cm
10 cm
8 cm
6 cm
4 cm
2 cm
1400
1406
2012 2013 2014 2015 2016
1408
106

FIG. 15

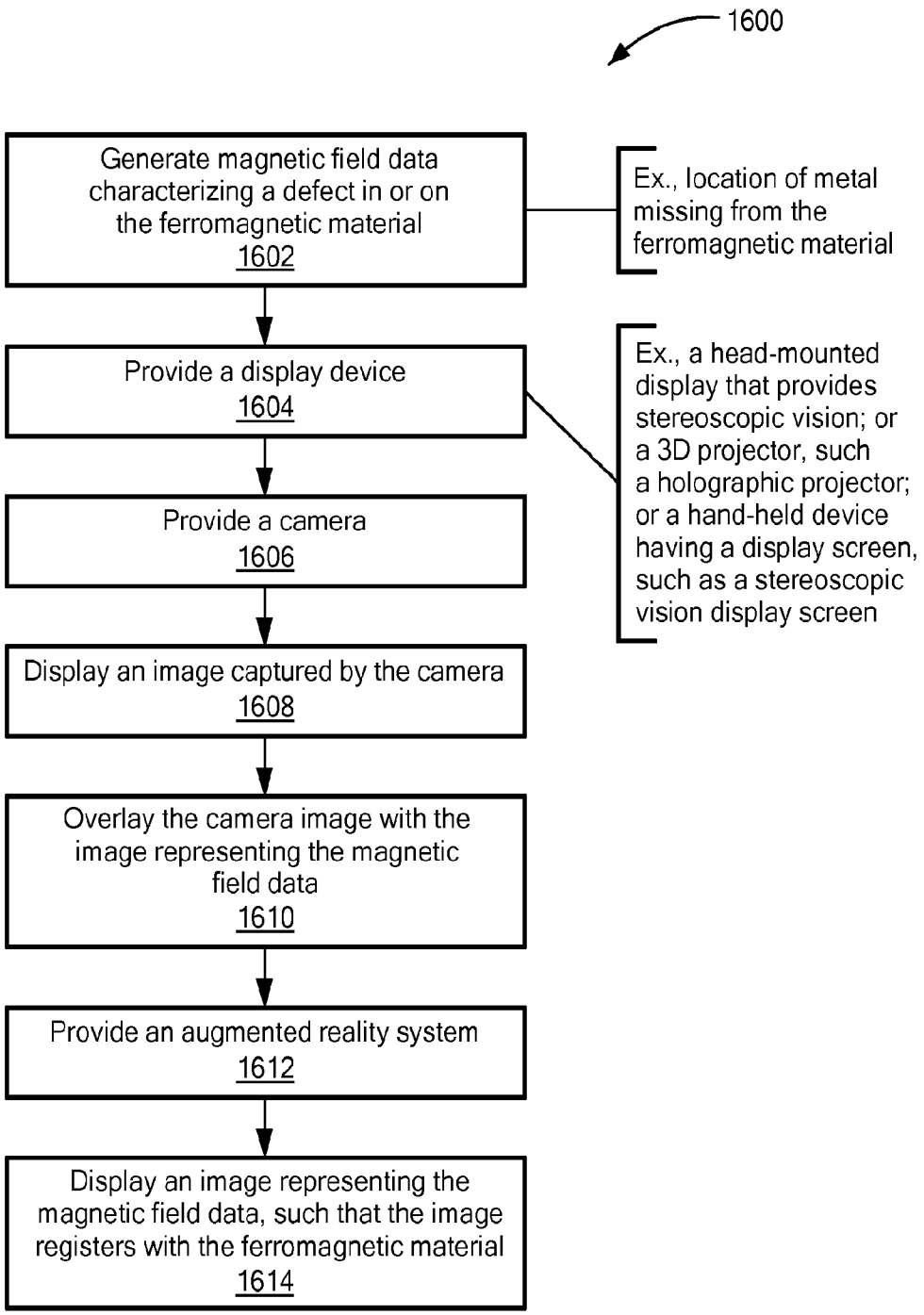
1600
Generate magnetic field data characterizing a defect in or on the ferromagnetic material
1602
Ex., location of metal missing from the ferromagnetic material
Provide a display device
1604
Ex., a head-mounted display that provides stereoscopic vision; or a 3D projector, such a holographic projector; or a hand-held device having a display screen, such as a stereoscopic vision display screen
Provide a camera
1606
Display an image captured by the camera
1608
Overlay the camera image with the image representing the magnetic field data
1610
Provide an augmented reality system
1612
Display an image representing the magnetic field data, such that the image registers with the ferromagnetic material
1614

FIG. 16

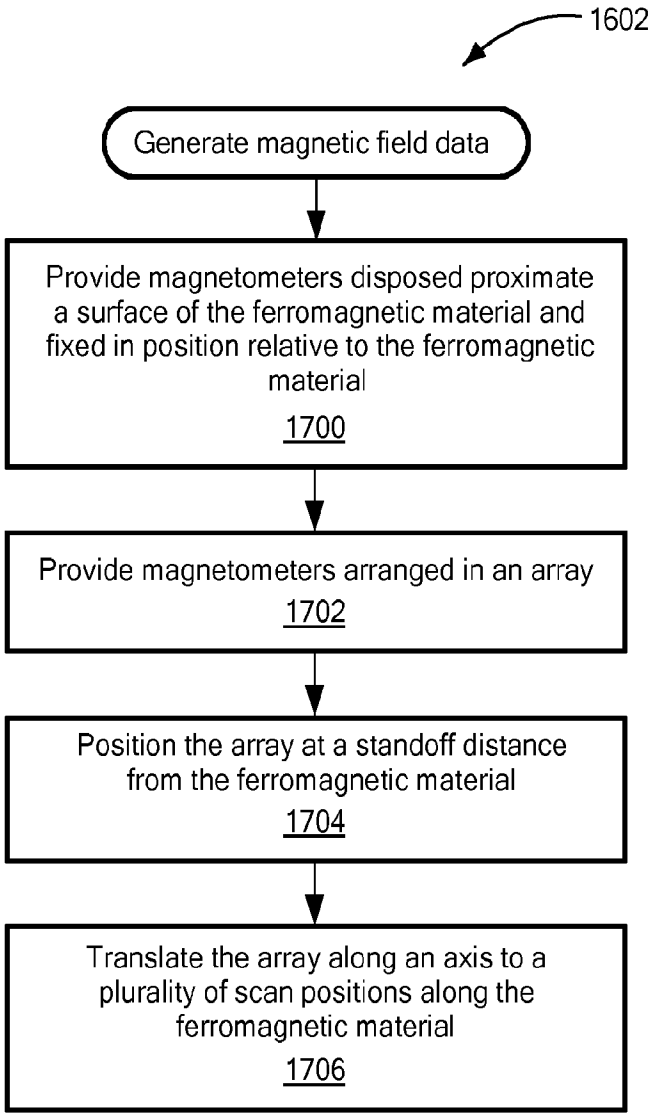
1602
Generate magnetic field data
Provide magnetometers disposed proximate a surface of the ferromagnetic material and fixed in position relative to the ferromagnetic material
1700
Provide magnetometers arranged in an array
1702
Position the array at a standoff distance from the ferromagnetic material
1704
Translate the array along an axis to a plurality of scan positions along the ferromagnetic material
1706

FIG. 17

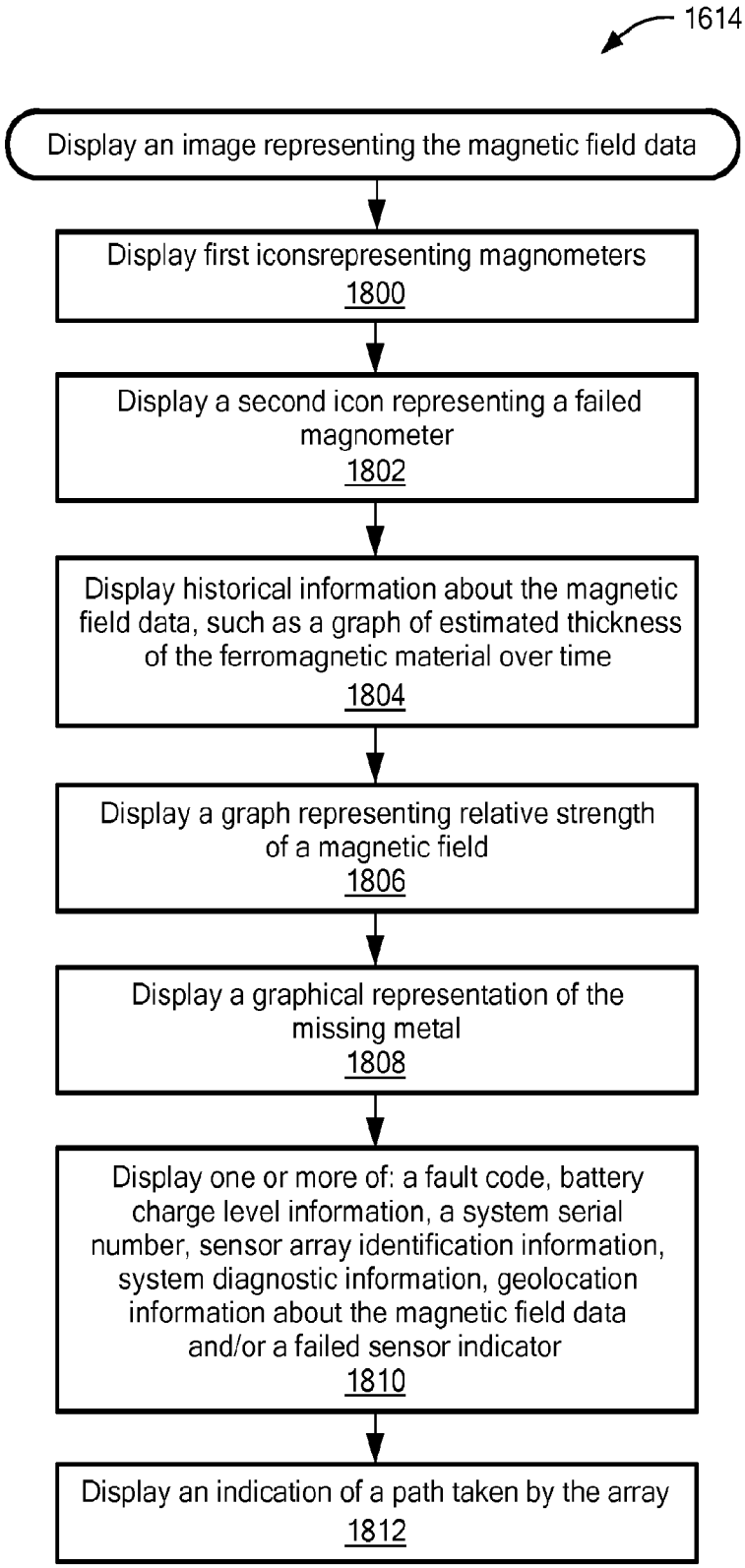
1614
Display an image representing the magnetic field data
Display first iconsrepresenting magnometers
1800
Display a second icon representing a failed magnometer
1802
Display historical information about the magnetic field data, such as a graph of estimated thickness of the ferromagnetic material over time
1804
Display a graph representing relative strength of a magnetic field
1806
Display a graphical representation of the missing metal
1808
Display one or more of: a fault code, battery charge level information, a system serial number, sensor array identification information, system diagnostic information, geolocation information about the magnetic field data and/or a failed sensor indicator
1810
Display an indication of a path taken by the array
1812

FIG. 18

INTERNATIONAL SEARCH REPORT

International application No
PCT/US2018/021287

A. CLASSIFICATION OF SUBJECT MATTER
INV. G01N27/82 G01N21/84
ADD.

According to International Patent Classification (IPC) or to both national classification and IPC

B. FIELDS SEARCHED

Minimum documentation searched (classification system followed by classification symbols)
G01N

Documentation searched other than minimum documentation to the extent that such documents are included in the fields searched

Electronic data base consulted during the international search (name of data base and, where practicable, search terms used)
EPO-Internal, WPI Data, COMPENDEX, INSPEC, IBM-TDB

C. DOCUMENTS CONSIDERED TO BE RELEVANT

Category*	Citation of document, with indication, where appropriate, of the relevant passages	Relevant to claim No.
Y	WO 2015/120550 A1 (PURE TECHNOLOGIES LTD [CA]) 20 August 2015 (2015-08-20) paragraph [0009] - paragraph [0016]	1-14
Y	US 2015/317833 A1 (EBSTYNE MICHAEL JOHN [US] ET AL) 5 November 2015 (2015-11-05) paragraph [0003] paragraph [0016] - paragraph [0017]; figure 3	1-14

☐ Further documents are listed in the continuation of Box C.

☒ See patent family annex.

* Special categories of cited documents :

"A" document defining the general state of the art which is not considered to be of particular relevance

"E" earlier application or patent but published on or after the international filing date

"L" document which may throw doubts on priority claim(s) or which is cited to establish the publication date of another citation or other special reason (as specified)

"O" document referring to an oral disclosure, use, exhibition or other means

"P" document published prior to the international filing date but later than the priority date claimed

"T" later document published after the international filing date or priority date and not in conflict with the application but cited to understand the principle or theory underlying the invention

"X" document of particular relevance; the claimed invention cannot be considered novel or cannot be considered to involve an inventive step when the document is taken alone

"Y" document of particular relevance; the claimed invention cannot be considered to involve an inventive step when the document is combined with one or more other such documents, such combination being obvious to a person skilled in the art

"&" document member of the same patent family

Date of the actual completion of the international search	Date of mailing of the international search report
9 May 2018	22/05/2018

Name and mailing address of the ISA/	Authorized officer
European Patent Office, P.B. 5818 Patentlaan 2 NL - 2280 HV Rijswijk Tel. (+31-70) 340-2040, Fax: (+31-70) 340-3016	Lo Turco, Salvatore

1

INTERNATIONAL SEARCH REPORT

Information on patent family members

International application No
PCT/US2018/021287

Patent document cited in search report	Publication date	Patent family member(s)	Publication date
WO 2015120550 A1	20-08-2015	AU 2015218147 A1	01-09-2016
		CA 2939410 A1	20-08-2015
		EP 3105101 A1	21-12-2016
		US 2017176389 A1	22-06-2017
		WO 2015120550 A1	20-08-2015
US 2015317833 A1	05-11-2015	US 2015317833 A1	05-11-2015
		WO 2015168043 A1	05-11-2015