JOSEPH KINTZ.

Improvement in Casters.

No. 115,619.

Patented June 6, 1871.

Fig: 1.

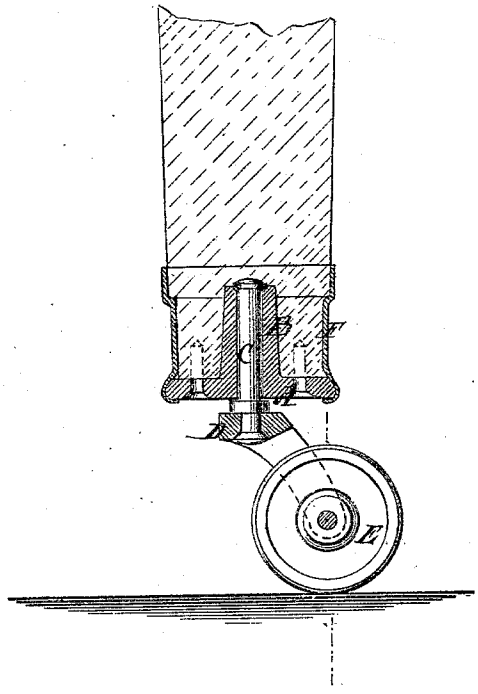

Witnesses:

C. Ruettig

L. S. Mabee

Inventor:

J. Kintz

PER Munn & Co

Attorneys.

AM. PHOTO-LITHOGRAPHIC CO. N.Y. (OSBORNE'S PROCESS.)

UNITED STATES PATENT OFFICE.

JOSEPH KINTZ, OF WEST MERIDEN, CONNECTICUT, ASSIGNOR TO HIMSELF AND P. J. CLARK, OF SAME PLACE.

IMPROVEMENT IN CASTERS.

Specification forming part of Letters Patent No. 115,619, dated June 6, 1871.

To all whom it may concern:

Be it known that I, JOSEPH KINTZ, of West Meriden, in the county of New Haven and State of Connecticut, have invented a new and useful Improvement in Casters; and I do hereby declare that the following is a full, clear, and exact description thereof, which will enable others skilled in the art to make and use the same, reference being had to the accompanying drawing forming part of this specification.

This invention relates to improvements in casters; and it consists in making the cup or socketed piece, which holds the spindle rising up from the wheel-frame and fits on the end of the leg, of cast metal for the bottom and the tubular part which holds the spindle, and wrought or rolled sheet metal in the part forming the sides of the cup, the two parts being joined together by milling or spinning the lower end of the sheet-metal part over the edge of the cast-metal bottom, the object being to provide a cup which will be less liable to crack when driven onto the legs snugly; also, lighter, smoother, and more ornamental cups.

The drawing represents a sectional elevation of a caster such as I propose to make.

A is a cast-metal (preferably iron) disk, which is to form the bottom of the cup or socketed part of the caster. It has a strong tubular projection, B, rising from the center of the upper side around the hole, for the reception of the spindle C, which connects the frame D of the wheel E with the socketed part, said tube being to support the spindle laterally, as in other casters. F is the sheet-metal rim or band forming the sides of the cup. It is formed by suitably binding a piece of sheet metal of the proper length and width, and joining the ends by welding or brazing, and it is attached to the disk A by inserting the latter in the lower end, which is first made considerably flaring, and milling, spinning, or otherwise turning the end over the edge of the disk A.

The disk A and the tube, which must be made heavy and thick, may, by this plan, be made of cheap cast-iron, while the band E, which must have greater tensile strength, and should be capable of being cheaply polished and ornamented, may be made of thin sheet-brass, which may be cheaply spun into ornamental shape, and it may have ornamental impressions formed on it while in the lathe by revolving tools pressing against the surface in a well-known way.

Having thus described my invention, I claim as new and desire to secure by Letters Patent—

In casters, the disk A and tube B, cast together, combined as described, with a wrought-metal band, F, spun on the said disk, to provide a cup-connection which will not crack when driven on the furniture.

JOSEPH KINTZ.

Witnesses:
GEO. A. FAY,
FRANK S. FAY.