United States Patent

[11] **3,619,594**

[72] Inventor **Eugene S. Morez**
River Grove, Ill.

[21] Appl. No. **7,118**
[22] Filed **Jan. 30, 1970**
[45] Patented **Nov. 9, 1971**
[73] Assignee **Chicago Musical Instrument Co.**
Lincolnwood, Ill.

[54] **ILLUMINATED KNOB**
7 Claims, 2 Drawing Figs.

[52] **U.S. Cl.** **240/2.13,** 74/553, 116/124
[51] **Int. Cl.** **E05b 17/10**
[50] **Field of Search** ..... 116/133, 124, 124.4; 240/2.13, 1 EI; 74/553, 504, 813, 10, 10.32

[56] **References Cited**

UNITED STATES PATENTS

1,566,069	12/1925	Buchholz et al.	116/124.4
2,334,479	11/1943	Creager	116/129 UX
2,502,915	4/1950	Atkins et al.	74/553
2,699,141	1/1955	Gaguski	116/124.4
2,768,603	10/1956	Fisher	116/124.4
2,943,596	7/1960	Frost	116/124
3,064,494	11/1962	Brewster	74/504

Primary Examiner—Louis J. Capozi
Attorney—Hill, Sherman, Meroni, Gross & Simpson

ABSTRACT: A knob assembly for angular positioning of a rotatable control shaft comprising an outer opaque cap member having an eccentric aperture through a face portion thereof and an inner light transmitting sleeve member fitting within the cap and onto the control shaft. The sleeve member has an end projection protruding into the aperture so that light striking the sleeve member away from the end projection is transmitted through the sleeve member and is visible at the aperture on the cap face. The cap and sleeve members are rigidly attached to one another and the sleeve member end projection is angularly movable as part of the knob assembly to illuminatingly indicate relative control shaft position in dimly lit environments. Variously colored light-transmitting materials, such as acrylic resins comprise the sleeve member and variously colored or coated opaque materials, such as acrylonitrile-butadiene-styrene resins comprise the cap member.

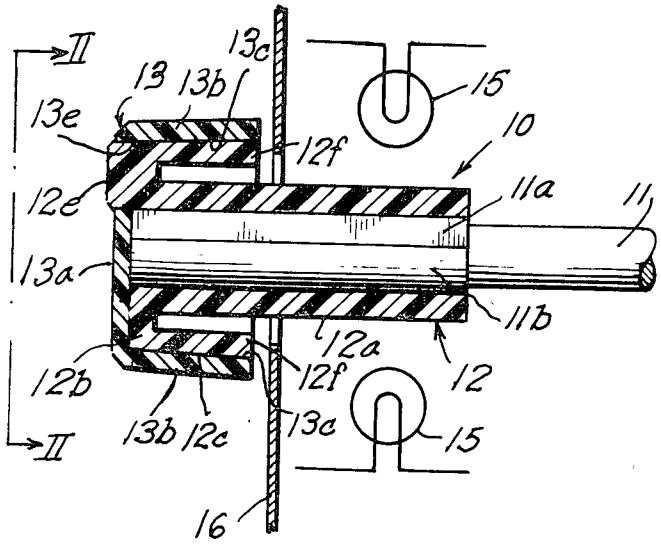

Fig-1

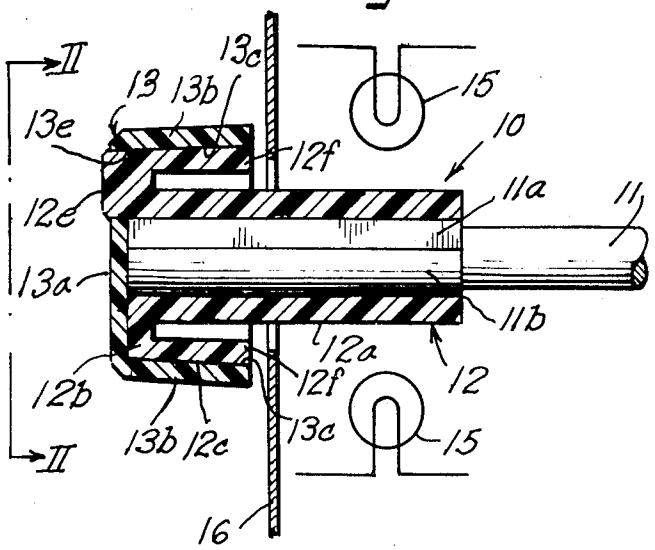

Fig-2

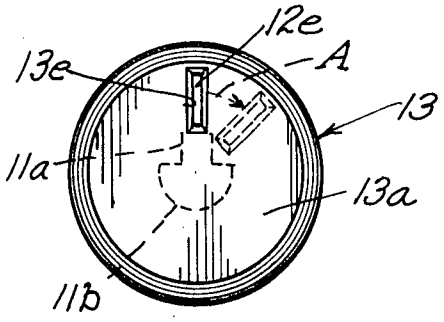

INVENTOR
Eugene S. Morez

BY Hill, Sherman, Meroni, Gross & Simpson ATTORNEYS

ILLUMINATED KNOB

BACKGROUND OF THE INVENTION

Field of the Invention

This invention relates to a method and means of visually indicating relative angular position of a rotatable control shaft.

Prior Art

Rotatable control shafts are used in a wide variety of instrumentalities to regulate various functions. Included within such instrumentalities are various musical instruments and related amplifiers, tone control devices, etc., which are occasionally utilized in dimly lit environments, such as in various places of entertainment, nightclubs, etc., where the user has little or no illumination to visually determine the position of a particular control shaft.

Prior practice for visually indicating angular position of a control shaft included placing an unilluminated contrasting mark on the outer face of a knob rotating the control shaft and a plurality of similar marks concentric with the knob on a stationary surface behind the knob whereby a user rotates the knob and attached control shaft to a desired position by matching the knob mark with a particular mark on the stationary surface. Other known practices dispense with the marks on the stationary surface behind the knob and require the user to approximate the desired angular position of the knob mark in relation to its fixed or zero position so as to determine the relative position of the control shaft. Such known prior practices require sufficient light to ascertain the marks on the knobs and/or surrounding stationary surfaces and accordingly are greatly restricted in their utility in dimly lit environments.

A somewhat related prior practice provides illuminated jewellike on-off indicators on stationary surfaces of a device, such as a musical instrument or the like, to indicate the operative state of the device. Such indicators are not suitable for use with rotatable knobs and/or control shafts since they require electrical conduits for operation and such conduits tend to become entangled and/or broken during rotational movement of their terminals. Further, such close proximity between electrical conduits and control shafts poses a substantial safety and operational hazards.

SUMMARY OF THE INVENTION

The invention provides a method of illuminatingly indicating relative control shaft position by transmitting light to a visible selected area of a knob assembly mounted on the control shaft from a spaced light source whereby the illuminated selected area is movable with the knob assembly and provides an illuminated indicator of the relative control shaft position so as to be visible in all light environments.

Although a wide variety of knob constructions may be utilized in practicing this method of illuminatingly indicating control shaft position, one particularly suitable knob construction includes providing a knob assembly comprising an outer opaque cap member having an eccentric aperture through its face portion and an inner light-transmitting sleeve member fitting within the cap member and onto the control shaft. The sleeve member is provided with an end projection that is in registry with and extends into the aperture so as to transmit light from the opposite end of the sleeve member to the cap face portion.

Accordingly it is an object of the present invention to provide a method and means of illuminatingly indicating control shaft angular position.

Another object of the present invention is to provide a method and means of indicating control shaft angular position in dimly lit environments.

Still a further object of the present invention is to provide a rotatable knob assembly for angularly positioning a control shaft and having a mechanical method and means of illuminatingly indicating the relative angular position of the control shaft.

Many other advantages, features and additional objects of the present invention will become manifest to those versed in the art upon making reference to the detailed description of a certain preferred embodiment thereof, taken in conjunction with the accompanying sheet of drawings in which a preferred structural embodiment incorporating the principles of the invention is shown by way of illustrative example and in which:

FIG. 1 is an essentially elevational diagrammatic view of a knob assembly embodying the novel features of the present invention; and

FIG. 2 is an elevational plan view taken along lines II—II of FIG. 1 with some parts in phantom to indicate their relative position.

AS SHOWN ON THE DRAWINGS

The principles of the invention are particularly useful when embodied in a knob construction such as shown in FIG. 1, which is exemplary of a knob assembly having the present invention.

The knob assembly **10** is mounted on a control shaft **11**, which may be of any angular shape so as to be frictionally engageable by the knob assembly and is here shown as being somewhat D-shaped having a half-round bottom portion **11***b* and a rectangular upper portion **11***a* (best seen in phantom cross section at FIG. 2) for receiving a conventional retainer clip (not shown). The control shaft **11** is operatively connected to some adjustable control (not shown) on a device (not shown) such as a guitar, organ, amplifier, etc., and is selectively angularly rotatable to adjust the particular function being controlled.

The illustrated knob assembly **10** comprises an outer opaque cap member **13** and an inner light-transmitting sleeve member **12** suitable joined together to form an integral knob assembly.

The cap member **13** is generally cup shaped having an outer or visible face portion **13***a* with a tubular side portion **13***b*. The user grasps the cap member along the side portion **13***b* and rotates the same about its axis to a desired extent. The cap member **13** is so formed that the exposed surface portion of the face **13***a* is essentially perpendicular to the axis of the side portion **13***b*. The inner surface **13***c* of the side **13***b* is generally tubular but is slightly frustoconical to facilitate construction assembly.

An eccentrically positioned aperture **13***e* is provided on the face **13***a*. The aperture **13***e* is defined by a plurality of straight edges defining a generally regular geometric shape, i.e., a rectangle, such as shown at FIG. 2. The aperture is preferably positioned eccentrically, that is near the outer boundary of the face portion **13***a* so as to enable a user to readily determine the angular position thereof.

The cap member **13** is composed of any totally or substantially opaque (i.e., poor light transmitting or translucent) material such as metal, synthetic resin material, plastic material, etc. Preferably the cap member is composed of an opaque synthetic resin material which is either naturally opaque or is provided with a means, such as a coating or the like to yield the desired opaqueness to the cap member. A particularly useful opaque synthetic resin material is an acrylonitrile-butadiene-styrene resin material.

The sleeve member **12** has a cross section which is generally T-shaped having a cylindrical hollow stem portion **12***a* provided with a hollow-shaped passageway for receiving and frictionally engaging the control shaft **11**. The interior hollow shaft passageway generally conforms to the shape of the control shaft so as to provide frictional engagement therewith whereby rotation of the sleeve member correspondingly rotates the control shaft in a well-known manner. The sleeve member **12** has an enlarged head portion **12***b* integrally formed with the stem portion **12***a*. The head portion **12***b* generally abuts the backside of face portion **13***a* of the side **13**—*b* of the cap member **13** and is provided with an eccentric end projection **12***e* in registry with and of a size to mate with

the aperture 13*e*. The end projection 12*e* extends into and through aperture 13*e* and is so shaped as to form a slightly protruding "jewel" on the face 13*a*. Thus, the end projection 12*e* is visible to view at the outer face 13*a*. As explained below, a selected area on the knob assembly thus is transparent or slightly translucent for ready passage of light and is visibly disposed whereby any light transmitted from the interior of the knob assembly will be visible at its outer face portion.

A tubular side portion 12*f* is integrally formed with the head portion 12*b* of the sleeve member 12 and is provided with a frustoconical outer surface 12*c* to match the similarly shaped surface 13*c* of the cap member 13. The side portion 12*f* extends axially as far as the side portion 13*b* to provide full support therefor.

The entire sleeve member 12 is composed of a suitable light-transmitting material that is compatible with or at least noninterfering with the control shaft 11. Thus, for example, when the control shaft regulates an electronic device, the material is an electrical insulator. Light-transmitting synthetic resin materials are generally preferred because of their availability and workability (i.e., they are readily shaped into desired configurations). Acrylic plastics material are particularly useful and styrene-acrylonitrile resin materials are exceptionally well suited for light-transmitting characteristics.

The sleeve member 12 is free of any light-interfering coatings or the like and is transparent or slightly translucent to visible light. Various dyes may be incorporated into the synthetic material with the resultant colored material yielding a colored jewel projection, which when internally illuminated, as by means lamp means 15, gives an aesthetic and readily visible indicator.

The sleeve member 12 is rigidly attached to the cap member 13 by a suitable means that does not interfere with the light-transmitting properties of the sleeve member and one particularly suitable means for attachment is by way of ultrasonic welding, which is a well known technique in the art. The use of adhesives and like foreign materials may interfere with the light-transmitting ability and color characteristics of the sleeve member and is to be avoided.

The tubular portion 12*a* of the sleeve member 12 projects through a cabinet wall 16 to a region adjacent to one or more lamps 15. Light enters into an end of the sleeve member 12 away from the projection 12*e* and is transmitted through the sleeve member to the projection and is visible thereat. In this way neither the heat or the electrical energy from the light source 15 affects the knob assembly or the control shaft. This separation of energies insures the proper operation of the device being regulated by the control shaft and also the safety of the user. Additionally, such internally illuminated control shaft position indicators are easily visible under all lighting conditions making them extremely useful for use on musical instruments and like devices that may operate in dimly lit environments.

As best seen in FIG. 2, the projection 12*e* is angularly movable through any desired angle A by selective rotation of cap member 13. Various opaque finishes or coatings can be applied to face 13*a* for increasing contrast and aesthetic effects as desired. Also the outer surfaces of the knob assembly, such as the face 13*a* and side surface 13*b* may be given special surface effects, such as brushing, polishing, knurling, etc., as desired. Further, various exposed corners of cap member 13 and the projection 12*e* may be bevelled as shown to eliminate sharp corners from the knob assembly.

The invention provides a method of visibly indicating relative angular position of a rotatable control shaft by providing a light source spaced from the control shaft and masked from view, providing a knob means on the control shaft for selectively rotating the control shaft and the knob having an eccentric light-transmitting area visible to view and transmitting light to the selected light-transmitting area from the light source whereby the eccentric area is illuminated from within and indicates the relative angular position of the control shaft. The knob assembly is provided with an opaque generally cup-shaped cap member having a visible face portion and means on said face portion defining an eccentric aperture and a light-transmitting sleeve member of generally T-shaped cross section fitting within the cap member and attached to the cap member at a surface adjacent to the visible face. The sleeve member is provided with a shaped passageway for receiving and frictionally engaging the control shaft and is also provided with an end projection in registry with the aperture in the cap member and extending into the aperture whereby light striking the sleeve member away from the end projection is visible at the face portion. The light-transmitting sleeve member may be provided with a dye as desired to enable it to filter the light so that where a plurality of such knob assemblies are utilized, a different color of projections can be provided to indicate different control knobs.

Although various modifications might be suggested to those versed in the art, it should be understood that I wish to embody within the scope of the patent warranted hereon, all such embodiments as reasonably and properly come within the scope of the appended claims.

I claim as my invention:

1. A knob assembly for angular positioning of a rotatable control shaft comprising,

a generally cup-shaped cap member having a surface defining an outer visible face portion,

means defining an eccentric aperture on said face portion, and

a sleeve member of generally T-shaped cross section fitting within said cap member and attached to said cap member, said sleeve member being provided with an end projection in registry with said aperture and extending into said aperture, said members having a contrasting light-transmitting capabilities wherein light striking the sleeve member away from the end projection is transmitted to said projection.

2. A knob assembly as defined in claim 1 wherein the means defining an eccentric aperture comprise a plurality of edges joined at their ends to define a geometrically regular shape.

3. A knob assembly as defined in claim 1 wherein the sleeve member is composed of a styrene-acrylonitrile resin material.

4. A knob assembly as defined in claim 3 wherein the styrene-acrylonitrile resin material is provided with a colored dye.

5. A knob assembly as defined in claim 1 wherein the cap member is composed of an acrylonitrile-butadiene-styrene material.

6. A knob assembly according to claim 1 in which said cap member is substantially opaque and in which said sleeve member is substantially transparent.

7. A knob assembly for angular positioning of a rotatable control shaft comprising:

a. a generally cup-shaped cap member having a surface defining an outer visible face portion,

b. means defining an eccentric aperture on said face portion; and

c. a sleeve member fitting within said cap member and attached to said cap member, said sleeve member being provided with an end projection in registry with said aperture and extending into said aperture, said members having a contrasting light-transmitting capabilities wherein light striking the sleeve member away from the end projections is transmitted to said projection.

* * * * *