No. 796,929. PATENTED AUG. 8, 1905.

F. R. PARKER.

PULLEY WEIGHT.

APPLICATION FILED DEC. 5, 1903.

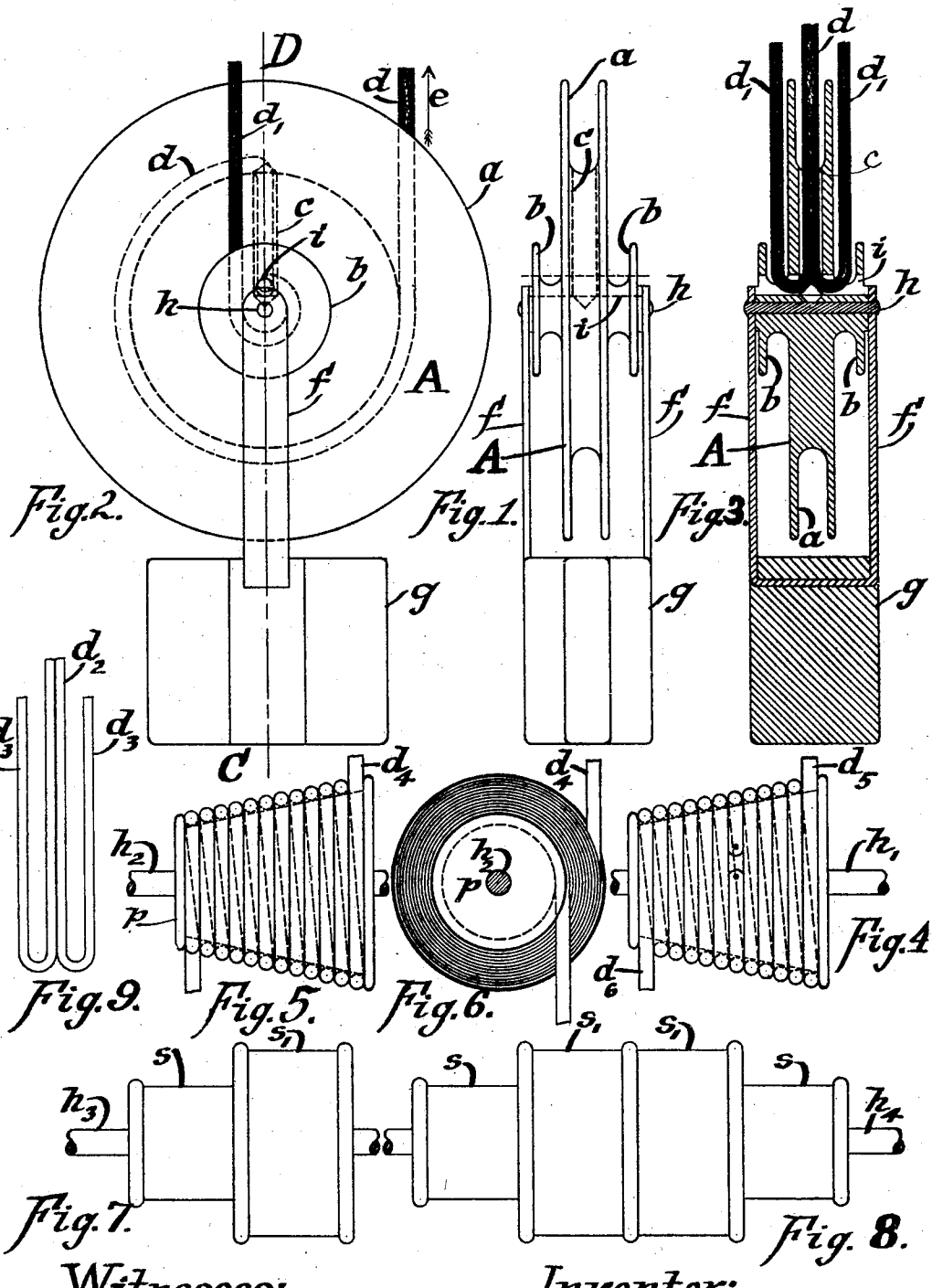

Fig. 2. Fig. 1. Fig. 3. Fig. 9. Fig. 5. Fig. 6. Fig. 4. Fig. 7. Fig. 8.

Witnesses:

R. G. Parker

Harry B. Elmers

Inventor:

Frederick R. Parker.

ANDREW. B. GRAHAM CO., PHOTO-LITHOGRAPHERS, WASHINGTON, D. C.

UNITED STATES PATENT OFFICE.

FREDERICK R. PARKER, OF CHICAGO, ILLINOIS.

PULLEY-WEIGHT.

No. 796,929. Specification of Letters Patent. Patented Aug. 8, 1905.

Application filed December 5, 1903. Serial No. 183,949.

To all whom it may concern:

Be it known that I, FREDERICK R. PARKER, a citizen of the United States, residing at Chicago, in the county of Cook and State of Illinois, have invented new and useful Improvements in Pulley-Weights, of which the following is a full, clear, concise, and exact description, reference being had to the accompanying drawings, forming a part of this specification.

My invention relates to a pulley-weight, my object being, first, to provide a combination of pulleys upon which a cord is wound, the said cord suspending the pulleys in a loop or swing thereof and a weight adapted to put a tension in the cord, the pulley-weight as a whole being adapted to move through a much less space than a single pulley when the cord is unwound therefrom or wound thereupon, and, second, to adapt the said pulleys to accommodate a divided cord.

In telephone-switchboards it is customary to use a pulley-weight for the connecting-cords thereof, consisting of a single pulley and a weight attached thereto, the said pulley simply hanging in a loop or swing of the cord. This arrangement requires the operator's keyboard to be a considerable distance above the floor or base of the switchboard, as the pulley-weight has to rise approximately one-half of the distance through which the end of the cord is pulled when connection is made. On a large switchboard the connecting-cord necessarily has to be pulled several feet from the keyboard, and therefore the pulley-weight has to have considerable space in which to play up and down.

In my present invention I have provided a combination-pulley consisting of large pulleys and small pulleys, all rotating together and on the same axis, and have provided means whereby a cord may be wound around a large pulley and a small pulley thereof, and thereby suspend the combination-pulley in a loop or swing of the cord. With this arrangement when the combination-pulley is revolved by raising or lowering one end of the cord a portion of the cord is unwound therefrom faster than another portion of the cord is wound thereon, or vice versa, and with proper proportions for the pulleys the pulley-weight may be made to travel through as small a space as is desired. This pulley-weight used on a telephone-switchboard cord enables the keyboard to be lowered considerably and the operator to sit in an ordinary chair instead of a high chair. The advantages in the construction of the switchboard will be readily seen, the height of same being greatly reduced, which permits of a large saving in the ironwork, woodwork, and cabling and does away with the customary foot-rails and high chairs, thus making a neat, compact, and convenient switchboard. I have spoken of "telephone-switchboards," as the advantages of such a pulley-weight are best seen here; but I do not wish to limit same to such particular usage.

The number of large pulleys or the number of small pulleys in the combination is immaterial, as the principle of operation is the same in all cases and is the feature described and claimed in this invention.

I have illustrated my invention in the accompanying drawings, in which—

Figure 1 is an edge elevation of the combination-pulley and suspended weight. Fig. 2 is a side elevation of the combination-pulley and suspended weight, showing a cord wound around a large pulley and a small pulley. Fig. 3 is a cross-sectional view of the combination-pulley and suspended weight, taken on line C D of Fig. 2, showing the method employed for passing a cord from a large pulley to two small pulleys. Fig. 4 is a modified form of the invention, showing two cords wound around the pulley. Fig. 5 shows one cord wound around the pulley of Fig. 4. Fig. 6 is a left end view of Fig. 5. Fig. 7 is a modified form of the invention, showing a large pulley and a small pulley. Fig. 8 is also a modified form of the invention, showing large pulleys and small pulleys; and Fig. 9 shows a double cord.

Like characters refer to like parts in the several figures.

In Fig. 1 the combination-pulley A consists of a large pulley a and small pulleys $b\,b$, placed side by side and adapted to all rotate together on one and the same axis h. The large pulley a is provided with a radial passage c, cut therein, and a transverse passage i, extending through all of the pulleys b, a, and b. The radial passage c and the transverse passage i intersect, so as to form a passage from the large pulley a to each of the small pulleys $b\,b$. The divided cord $d\,d'$ is inserted through the passages c and i from the large pulley a to each of the small pulleys $b\,b$, as shown in Fig. 3. The portion d of the cord is the combined strands $d'\,d'$, or it may be two separate strands, as shown at d^2, Fig. 9. When the cord in use is a switchboard-cord, the por-

tion d is preferably connected to the connecting-plug. In Fig. 2 the cord d passes around pulley a and through the passage c, where it divides into d' d'. The portions d' d' pass from the passage c through the passage i to the respective pulleys b b, around which they are wound, respectively. The weight g is suspended from the pin h by the hanger f and is used to put a tension in the cord.

In Fig. 2 when the portion d of the cord is pulled in the direction of the arrow e it is unwound from the large pulley a and the portion d' is wound up on the small pulley b. The pulley-weight necessarily rises, assuming that the upper end of d' is fixed; but as d' is much nearer the axis h than d is the pulley-weight rises through a small part only of the distance through which d is pulled. With the proper proportion between the diameters of pulleys a and b, respectively, the distance through which the pulley-weight passes may be any fractional part or any multiple of the distance through which the portion d of the cord passes. When d is lowered, it is again wound up on the pulley a and d' is unwound from the pulley b. In this instance the pulley-weight descends. It is evident that the relation between the descent of the pulley-weight and the descent of d is the same as the relation between the rise of the pulley-weight and the rise of d.

Fig. 7 shows a large pulley s' and a small pulley s, mounted so as to turn together on the axis h^3. The pulleys s' and s are adapted to receive respective cords.

Fig. 8 shows large pulleys s' s' and small pulleys s s, mounted so as to turn together on the axis h^4. The pulleys s' s' s s are adapted to receive respective cords.

In Figs. 1, 2, and 3, the turns on any one pulley lie one on top of the other, while in Figs. 7 and 8, the turns on any one pulley would lie side by side.

Figs. 4, 5, and 6 show a pulley of varying diameter adapted to produce the same effect as the pulleys in Fig. 1. There may be a continuous cord d^4 wound around this pulley, as in Fig. 5, or two separate cords d^5 and d^6, as in Fig. 4.

In a two-strand telephone-switchboard cord the arrangement shown in Figs. 3 or 9 may be used. With a cord of more than two strands provision may be made in the division of the cord or in the arrangement of the pulleys.

I do not wish to limit this invention to the exact details of construction or to the number of pulleys or strands as herein shown, but desire it to be understood that the principles of such a pulley-weight are what I hereinafter claim independently of the minor details, number of pulleys and strands, or the arrangement of same.

Having described my invention, what I claim as new, and desire to secure by Letters Patent, is—

1. In a pulley-weight, the combination of a large pulley and a small pulley, both adapted to rotate on the same axis, a weight hanging from the pulleys, a passage from one pulley to the other, a cord extending through the said passage and wound upon both pulleys so as to suspend the pulley weight in a swing of the cord, the latter being wound up on one pulley and unwound from the other pulley when the pulley-weight is raised or lowered by raising or lowering one end of the cord, substantially as described.

2. In a pulley-weight, the combination of a large pulley and small pulleys, all of the pulleys being adapted to rotate on one and the same axis, a weight suspended from the said axis, a passage from the large pulley to each of the small pulleys, cords passing through the respective passages, each cord being wound upon the large pulley and its respective small pulley, the said cords also suspending the pulley-weight in loops thereof and being wound up on the large pulley and unwound from their respective small pulleys when the said pulleys are rotated in one direction, and unwound from the large pulley and wound up on their respective small pulleys when the said pulleys are rotated in the opposite direction, substantially as described.

3. In a pulley-weight, the combination of a large pulley, two small pulleys, one on each side of the large pulley, all of the pulleys being adapted to rotate on one and the same axis, a weight suspended from the said axis, a passage from the large pulley to each of the small pulleys, a cord, one portion of which is divided, longitudinally, and passed through the respective passages to the respective small pulleys, the main portion of the cord being wound around the large pulley and the divided portions being wound around their respective small pulleys, the said cord also suspending the pulley-weight in a loop, the main portion of the cord being wound up on the large pulley and the divided portions being unwound from their respective small pulleys when the said pulleys are rotated in one direction, and the said main portion being unwound from the large pulley and the divided portions wound up on their respective small pulleys when the said pulleys are rotated in the opposite direction, substantially as described.

4. In a pulley-weight, the combination of pulleys, some larger than others, all adapted to rotate together on the same axis, a weight suspended from the said axis, suitable passages from one pulley to another, a cord extending through said passage, or passages, and being wound upon some of the said pulleys, the said pulleys rotating when one end of the cord is pulled, and thereby winding on and unwinding from the said pulleys, respective portions of the said cord, at different speeds, substantially as described.

5. In a pulley-weight, the combination of pulleys, some larger than others and all adapted to rotate together on a given axis, suitable passages connecting the pulleys, a cord extending through the said passages and being wound around certain said pulleys, the said cord also suspending the pulley-weight in a loop, and a weight suspended from the pulleys and adapted to put a tension in the cord, the raising and lowering of one end of the said cord, causing the pulley-weight to be correspondingly raised and lowered through a space much less than one-half of the space through which the said end of the cord is moved, due to the ratio of the pulleys, substantially as described.

6. In a pulley-weight, the combination of pulleys adapted to rotate together on the same axis, a weight hanging from the pulleys, a cord wound upon the said pulleys and suspending the pulley-weight in a swing, the said cord being wound up on one pulley and unwound from another pulley when the pulley-weight is raised or lowered by raising or lowering one end of the cord, substantially as described.

7. In a pulley-weight, the combination of pulleys adapted to rotate together on the same axis, a weight hanging from the pulleys, cords wound upon the said pulleys and suspending the pulley-weight in loops of the cords, the said cords being wound up on certain pulleys and unwound from other pulleys when the pulleys are revolved by raising or lowering one end of the cords, substantially as described.

8. In a pulley-weight for switchboard-cords, the combination of a differential pulley adapted to accommodate the cord and to be suspended in a swing thereof, and a weight hanging from the said pulley and adapted to put a tension in the said cord, the whole being adapted to move through a small space when the cord is pulled out for connection, for purposes substantially as described.

9. In a pulley-weight for switchboard-cords, a combination of pulleys adapted to rotate together, and provided with passages connecting the pulleys and adapted to accommodate the cord, the said cord suspending the pulleys in a swing thereof, and a weight hanging from the pulleys to put a tension in the cord, the whole moving through a small space when the cord is used for making connections, for purposes substantially as described.

10. The combination of a large pulley and a small pulley adapted to rotate together and provided with a passage connecting the pulleys, a cord extending through the passage and being wound upon the said pulleys, each pulley being just wide enough to accommodate one turn of the cord, thereby compelling each turn of the cord to be wound on top of the preceding turn, and a weight suspended from the pulleys and adapted to put a tension in the cord.

11. In a pulley-weight, the combination of large and small pulleys adapted to rotate together and provided with passages connecting the pulleys, cords extending through the passages and wound upon the said pulleys, each pulley being wide enough to accommodate one turn only of its cord, thereby compelling each turn of the cord, on any one pulley, to be wound on top of the preceding turn, and a weight suspended from the pulleys and adapted to put a tension in the cords, substantially as described.

12. In a pulley-weight for switchboard-cords, the combination of large and small pulleys adapted to accommodate the cord and to rotate together upon the same axis, the said cord suspending the pulleys in a swing thereof, and a weight hanging from the said axis and adapted to assist one of the said pulleys to automatically wind up a portion of the said cord after usage, substantially as described.

13. In a telephone-switchboard, the combination of a connecting-cord, and a differential pulley suspended in a swing of the cord, and upon which the cord is wound so that the pulley moves through a smaller space than a single pulley would, during the use of the cord, substantially as described.

14. In a telephone-switchboard, the combination of a cord for connecting the lines for use, a pulley-wheel suspended in a swing of the cord and upon which the cord is wound so that a portion thereof is unwound from the wheel faster than a portion is wound upon the wheel, or vice versa, when the cord is being used, and means whereby the cord may be so wound upon the pulley-wheel, for purposes substantially as described.

15. In a telephone-switchboard, the combination of a connecting-cord, a portion of which is divided longitudinally, large and small pulley-wheels arranged to rotate on the same axis, and upon which the said cord is wound so as to suspend the said wheels in a swing of the cord, and passages connecting the wheels and through which the divided portions of the cord extend, for purposes substantially as described.

16. A number of pulley-wheels of different diameters arranged to rotate on the same axis, passage-ways connecting the wheels together, and a cord or cords, or the like, extending through the passage-ways and wound upon the wheels, each wheel being just wide enough to compel each turn of its cord to be wound outside of, or upon, the preceding turn, for purposes substantially as described.

17. A combination pulley-wheel comprising a number of grooved wheels arranged side by side so as to rotate together on the same axis, passages connecting the grooves of the wheels, and a weight hung from the said axis, all to be used in connection with a

cord, strands, or the like, substantially as described.

18. A differential pulley provided with passages through same connecting the pulleys, and a weight hung from the axis.

19. A number of pulleys arranged to rotate on the same axis, passages extending through the pulleys from one to another, and a weight hung from the axis.

20. In a telephone-switchboard, a connecting-cord, a portion of which is divided longitudinally, a wheel provided with annular grooves in which the cord is wound, passages through the wheel connecting the said grooves, and through which the said cord extends, and a weight hung from the axis of the wheel.

21. In a telephone-switchboard or the like, a connecting-cord, a portion of which is divided longitudinally, a wheel provided with annular grooves in which the cord is wound, the said grooves being just wide enough to accommodate one turn of the cord, thus necessitating each turn being wound on top of the preceding turn, and passages through the wheel connecting the said annular grooves, and through which the divided portion of the cord passes, substantially as described.

22. In a telephone-switchboard or the like, a connecting-cord, a wheel provided with annular grooves of different diameters in which the cord is wound, passages through the wheel connecting the said grooves, and through which the said cord extends, and a weight hung from the axis of the wheel.

23. A telephone-switchboard cord comprising separate conducting-strands for approximately one half of its length, and a single strand embracing all of the separate strands, for approximately the other half of its length, in combination with a differential pulley upon which the cord is wound so as to suspend the pulley-weight in a swing of the cord, substantially as described.

24. In a device of the character described, a wheel provided with circumferential grooves of different diameters, therearound, each groove being formed so that each turn of a strand or the like, wound therein, is wound on top of the preceding strand, and passages connecting the grooves.

25. In a device of the character described, a wheel provided with grooves therearound, passages connecting the grooves, and a weight hung from the axis of the wheel.

26. In apparatus of the class specified, a wheel constructed as a number of wheels of different diameters, around each of which a cord, strand, or the like, may be wound, passages from one wheel to another, adapted to accommodate the cord or the like, and a weight hung from the axis of the wheel.

27. In apparatus of the class specified, a wheel constructed as a number of wheels, around each of which a cord, strand, or the like, may be wound, passages connecting the wheels, and a weight hung from the wheel.

28. In apparatus for a telephone-switchboard or the like, a pulley-wheel provided with circumferential grooves of different diameters, passages in the wheel connecting the grooves, and a cord, or the like, extending through the passages, wound within the said grooves, and suspending the pulley-wheel in the lower part of a swing or loop formed by the cord, substantially as described.

In witness whereof I hereunto subscribe my name this 3d day of December, A. D. 1903.

FREDERICK R. PARKER.

Witnesses:
R. G. PARKER,
HARRY B. ELMERS.