Jan. 26, 1965 T. G PALMAER 3,167,619

HEADSTRAPS FOR EARPHONE

Filed Sept. 22, 1961

FIG. 1.

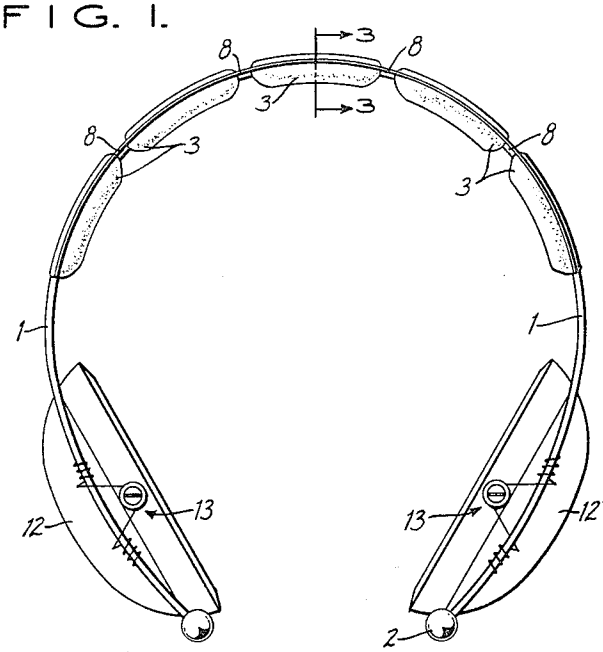

FIG. 2.

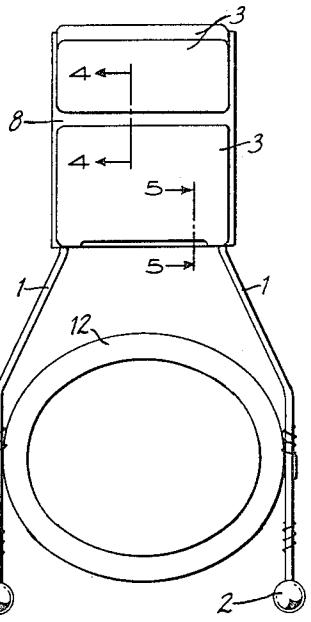

FIG. 3.

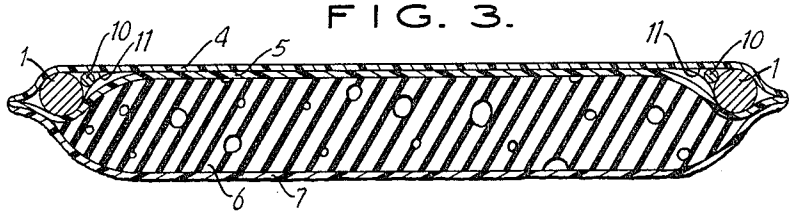

FIG. 4.

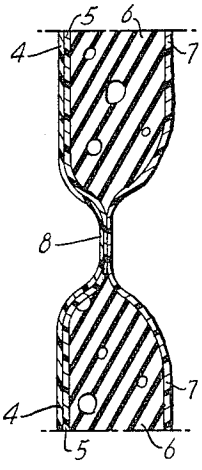

FIG. 5.

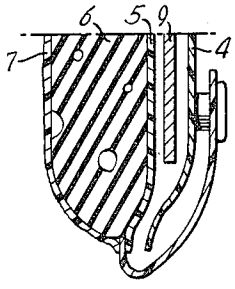

INVENTOR.
TORE GEORG PALMAER

BY
Morgan, Finnegan, Durham & Pine
ATTORNEYS

United States Patent Office

3,167,619
Patented Jan. 26, 1965

1

3,167,619

HEADSTRAPS FOR EARPHONE

Tore Georg Palmaer, Vrakvagen 31, Lidingo 1, Sweden

Filed Sept. 22, 1961, Ser. No. 140,063
3 Claims. (Cl. 179—156)

The present invention relates to a headstrap with a crown cushion to support, for example, an ear shield for noise or heat, with or without earphones or microphone and electrical connectors, whereby the earphones and microphone also can be used without the noise shield.

Objects and advantages of the invention will be set forth in part hereinafter and in part will be obvious herefrom or may be learned by practice with the invention, the same being realized and attained by means of the instrumentalities and combinations pointed out in the appended claims.

The invention consists in the novel parts, constructions, arrangements, combinations and improvements herein shown and described.

The accompanying drawings, referred to herein and constituting a part hereof, illustrate an embodiment of the invention, and together with the description, serve to explain the principles of the invention.

One purpose of the invention is to furnish a head strap which can be fitted easily to any head shape, is comfortable and has great flexibility and is easily adjustable. Another purpose is to furnish a head strap with a waterproof crown cushion which has a small weight and constructed in such a manner that it can be worn so that the crown is free (for example the strap can be carried under the chin). Furthermore it should be possible to apply the strap with only one hand, and the design should be such that it lends itself favorably for mass production.

A large number of head straps of various kinds are known. Thus a known design makes use of two, essentially parallel, springy wires or ribbons with a cushion in between for protection of the crown.

The wires or ribbons preferably are bent in such a manner that the radius of curvature increases toward the ends of the wires. The wires run through guide channels through the edges of the cushion. However, the straps of this kind do not fulfill the requirements given above. Tests have shown that the two-wire type straps are not strong and if the wires are connected at the ends the straps are too stiff so that the pressure against the ears will be uneven. On the other hand, two wire straps which are not connected at the ends are too flimsy to carry earphones and to put on comfortably.

The proposed strap is made to fulfill the requirements mentioned by having the crown cushion divided into several parts by compressed portions running crosswise and securing the cushion to the wires, thus holding the wires in correct positions at the edges of the cushion and providing improved flexibility of the cushion in the lengthwise direction and improved stiffness in the crosswise direction. The ends of the wires can be moved freely.

One form of the invention is shown schematically on the attached drawing where FIGURES 1 and 2 show front and side views respectively of the strap with attached ear muffs. FIGURES 3 and 4 show, enlarged, the sections III—III in FIGURE 1 and IV—IV in FIGURE 2. Furthermore FIGURE 5 shows a section through the line V—V in FIGURE 2.

The main strap consists in essence of two approximately parallel springy wires or ribbons 1, bent so that the radius of curvature increases toward the ends; the wires may

2

be terminated by balls 2 or a microphone holder. The crown cushion 3 consists of four layers of plastic; a rather stiff plastic foil 4 on the outside, then a comparatively soft plastic layer 5, a layer of foam rubber 6, and a soft corrugated layer 7 closest to the head. These plastic layers can be replaced with other flexible waterproof material. After completion of the cushion the wires are inserted in channels 11 along the edges of the cushion between the outer bands 4, 5 (FIGURE 3). Between the strap wires are transverse seams 8 running across at even intervals which divide the cushion in several parts. These seams hold the wires in the correct place and also give the cushion appropriate stiffness in the cross direction and flexibility in the lengthwise direction. Furthermore they also provide air channels for ventilation. The stiff foil 4 on the outside of the cushion pushes the foam rubber 6 against the inside surface and holds, together with the soft intermediate foil 5, the wires 1 outside or above the foam layer 6 so that the straps do not press against the crown. The innermost layer 7 should be soft and the surface should be rough to give a comfortable, secure feeling when the strap is worn. The inside of the cushion can be covered also with water absorptive material such as cloth which is more comfortable than plastic.

By means of special attachments 13 the head strap can carry for example noise muffs 12 with or without earphones.

In one or more of the various parts of the cushion 3, preferably near the far end, an electric connector 9 (FIGURE 5) can be applied between the layers 4 and 5, for earphones or microphone which also can be mounted on the main strap.

In the channels for the springy wires 1 the electrical leads 10 for the earphones can be placed.

In the strap thus described the wires follow the shape of the head and can move independently of each other. The strap is so flexible that it can be compressed essentially flat and it can be twisted without being damaged. It is covered with essentially waterproof material and can be placed on the head with only one hand. Finally it can, if desired, be carried under the chin, and it can readily be mass produced. The four plastic layers can be fed into a plastic seam forming machine which in one operation can make the crown cushion, into which the strap wires are inserted. The terminating balls 2 are introduced after the mounting elements for the noise muffs, etc., have been added.

The invention in its broader aspects is not limited to the specific elements shown and described, but departures may be made therefrom, within the scope of the accompanying claims, without departing from the principles of the invention and without sacrificing its chief advantages.

What is claimed is:

1. A headstrap, in essence consisting of two generally parallel, springy strips with a crown cushion having channels along the edges thereof, said strips being bent so that the radius of curvature increases in the direction of the strip ends, and being inserted in said channels along the edges of said crown cushion, the cushion including lateral sections which run crosswise of the cushion at intervals between the strips, said sections holding the strips in proper positions at the ends of the cushion and increasing the flexibility of the cushion in the lengthwise direction and at the same time increasing the stiffness in the crosswise direction, said strips being, free outside the cushion channels, and essentially movable independently.

2. A headstrap according to claim 1, wherein said

crown cushion comprises a foam rubber member with a comparatively stiff waterproof layer on the outside and with a comparatively soft, waterproof layer on the inside which layers are joined together along the sides with clearance therebetween for said channels.

3. A headstrap according to claim 2, including a connector adapted to be used for an electrical component, said connector being located inside said waterproof layers.

References Cited by the Examiner

UNITED STATES PATENTS

2,381,524	8/45	Taylor	179—156
2,717,930	9/55	Hintz	179—156

ROBERT H. ROSE, *Primary Examiner.*

WILLIAM C. COOPER, *Examiner.*