US00D870793S

# (12) United States Design Patent

Lundblad et al.

(10) Patent No.: US D870,793 S
(45) Date of Patent: ** Dec. 24, 2019

(54) **CAMERA**

(71) Applicant: **Axis AB**, Lund (SE)

(72) Inventors: **Sebastian Lundblad**, Lund (SE); **Malte Lennerstedt**, Lund (SE); **Anna Papée**, Lund (SE); **Mathias Walter**, Lund (SE); **Mariano Vozzi**, Lund (SE); **Jonas Sjögren**, Lund (SE)

(73) Assignee: **AXIS AB**, Lund (SE)

(**) Term: **15 Years**

(21) Appl. No.: **29/676,346**

(22) Filed: **Jan. 10, 2019**

(30) **Foreign Application Priority Data**

Jul. 12, 2018 (EM) ..... 005502259-0002

(51) **LOC (12) Cl.** ..... **16-01**

(52) **U.S. Cl.**
USPC ..... **D16/203**

(58) **Field of Classification Search**
USPC ..... D16/200, 202–208, 218, 219, 242; 348/143, 148, 151, 373–376; 396/419, 396/427, 535, 539–541
CPC ..... G03B 17/02; G03B 19/04; G03B 17/56; G03B 17/04; G03B 15/03; H04N 5/2251; H04N 5/2252; H04N 5/2253; H04N 5/2254; H04N 7/181; H04N 7/183; H04N 7/18; G08B 13/1963; G08B 13/19619; G08B 13/19632; F16M 11/04; F16M 13/00
See application file for complete search history.

(56) **References Cited**

U.S. PATENT DOCUMENTS

| | | | | |
|---|---|---|---|---|
| D688,720 | S * | 8/2013 | Yilin | D16/203 |
| D751,621 | S * | 3/2016 | Katori | D16/203 |
| D752,674 | S * | 3/2016 | Katori | D16/203 |
| D772,324 | S * | 11/2016 | Bennermark | D16/203 |
| D781,169 | S * | 3/2017 | Wang | D10/106.5 |
| D786,725 | S * | 5/2017 | McCormick | D10/106.5 |
| D796,566 | S * | 9/2017 | Bingleman | D16/203 |
| D796,567 | S * | 9/2017 | Bingleman | D16/203 |
| D796,568 | S * | 9/2017 | Bingleman | D16/203 |
| D798,933 | S * | 10/2017 | Little | D16/203 |
| D816,755 | S * | 5/2018 | Barnekow | D16/203 |
| D822,088 | S * | 7/2018 | Park | D16/203 |
| D827,011 | S * | 8/2018 | Kip | D16/202 |

FOREIGN PATENT DOCUMENTS

| | | |
|---|---|---|
| EM | 001317895 | 3/2012 |
| EM | 003833409 | 3/2017 |
| EM | 004423275-0002 | 10/2017 |

* cited by examiner

*Primary Examiner* — Ramzi S Almatrahi
(74) *Attorney, Agent, or Firm* — Tucker Ellis LLP

(57) **CLAIM**

The ornamental design for a camera, as shown and described.

**DESCRIPTION**

FIG. **1** is a perspective view of a camera showing our new design;
FIG. **2** is a front view thereof;
FIG. **3** is a rear view thereof;
FIG. **4** is a left side view thereof;
FIG. **5** is a right side view thereof;
FIG. **6** is a top view thereof; and,
FIG. **7** is a bottom view thereof.
The broken lines depict portions of the camera in which the design is embodied that form no part of the claimed design.

**1 Claim, 5 Drawing Sheets**

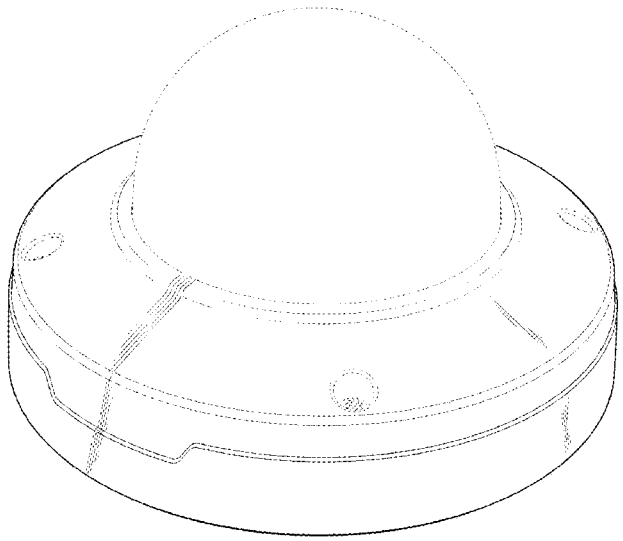

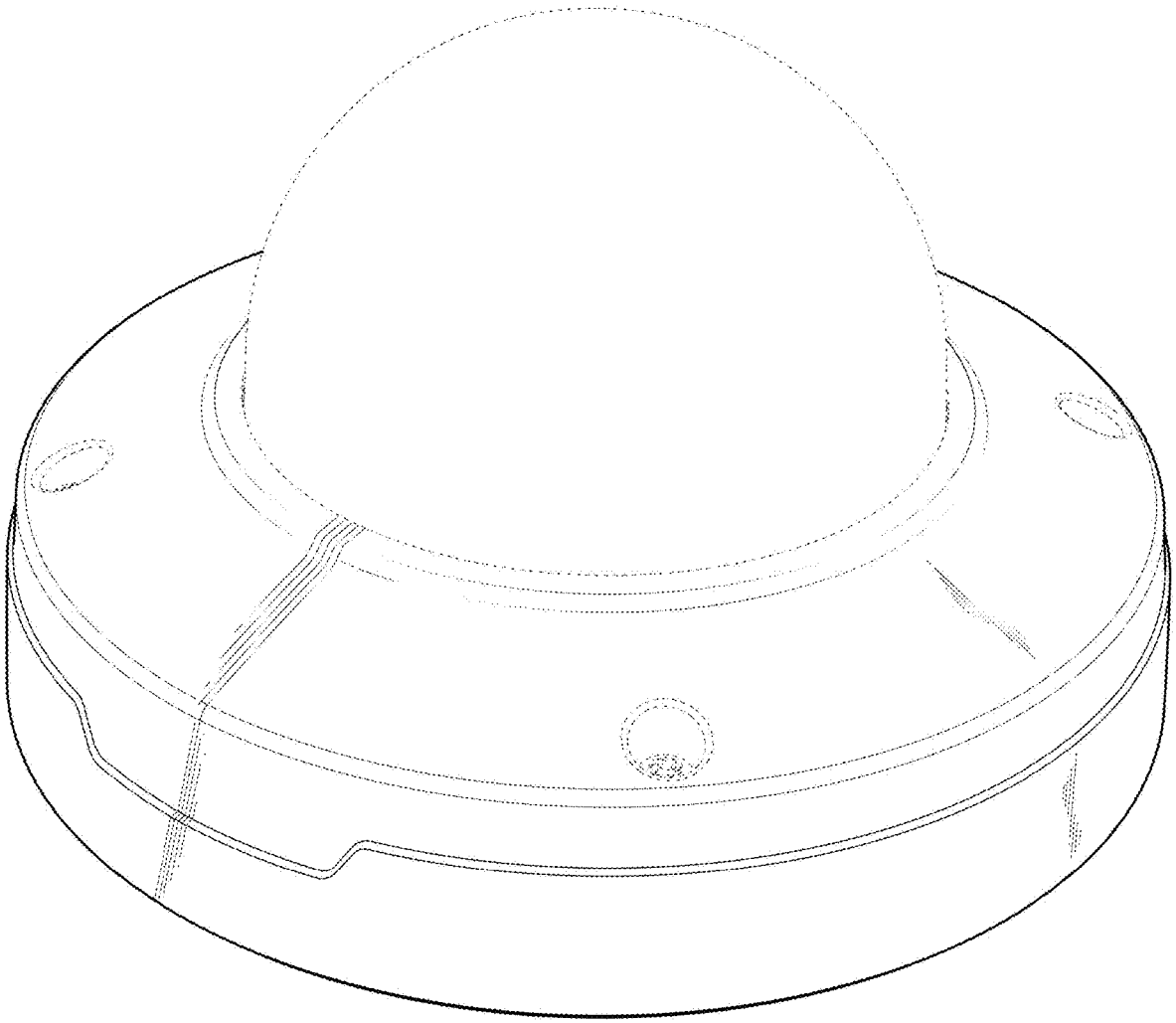

FIG. 1

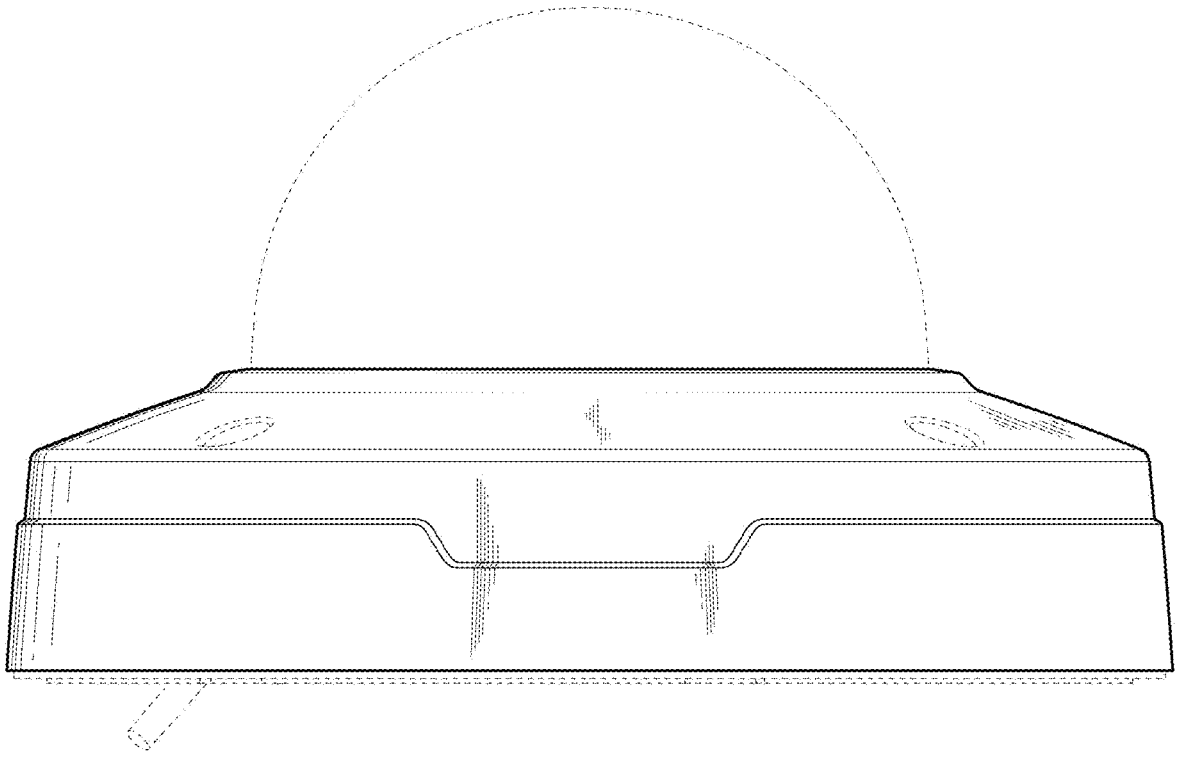

FIG. 2

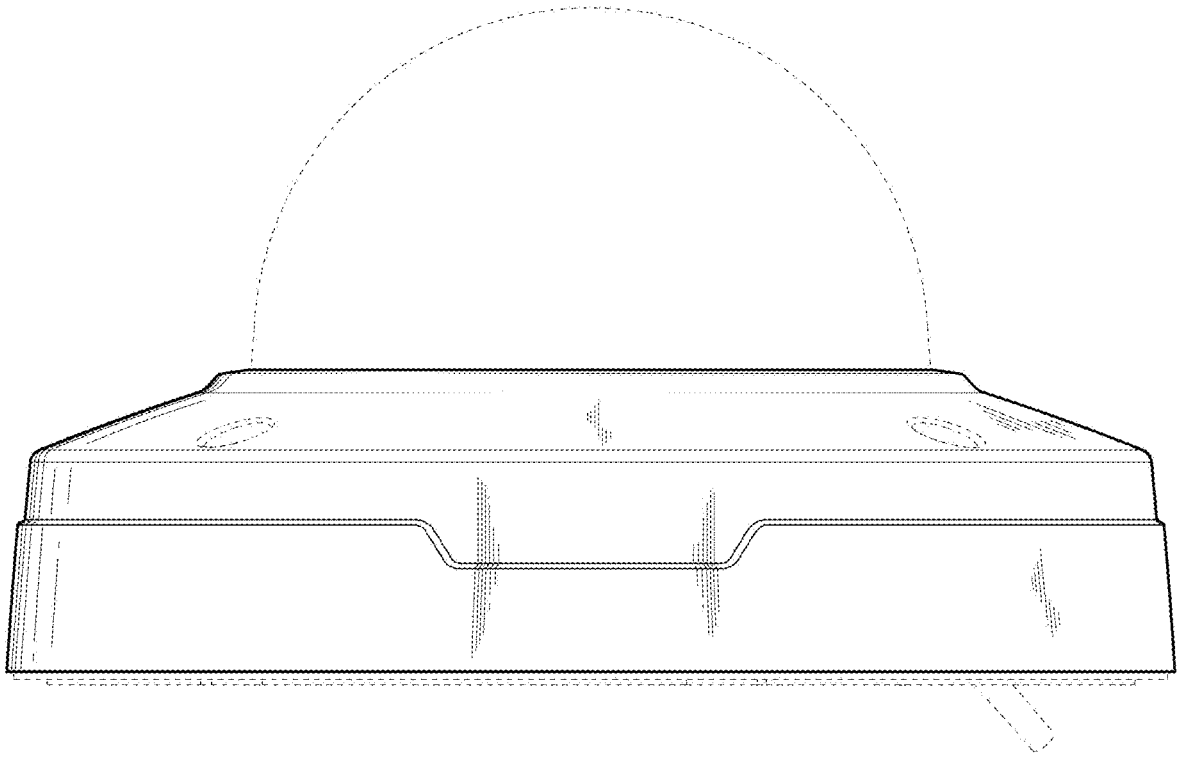

FIG. 3

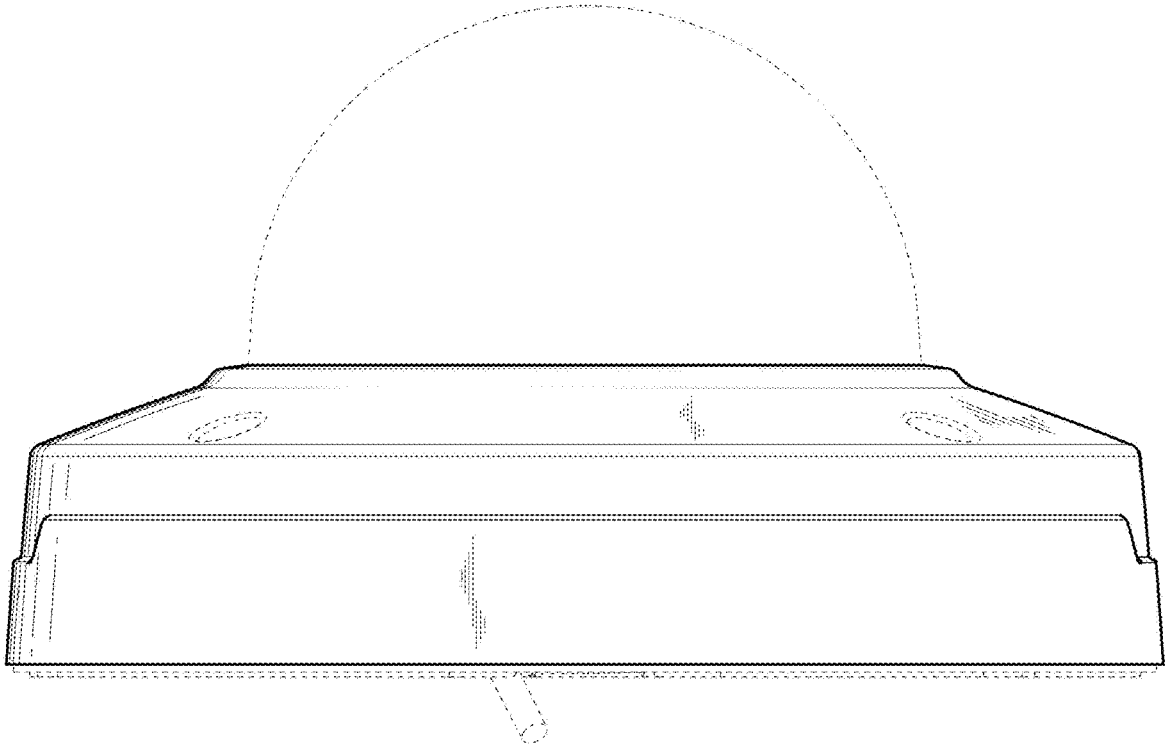

FIG. 4

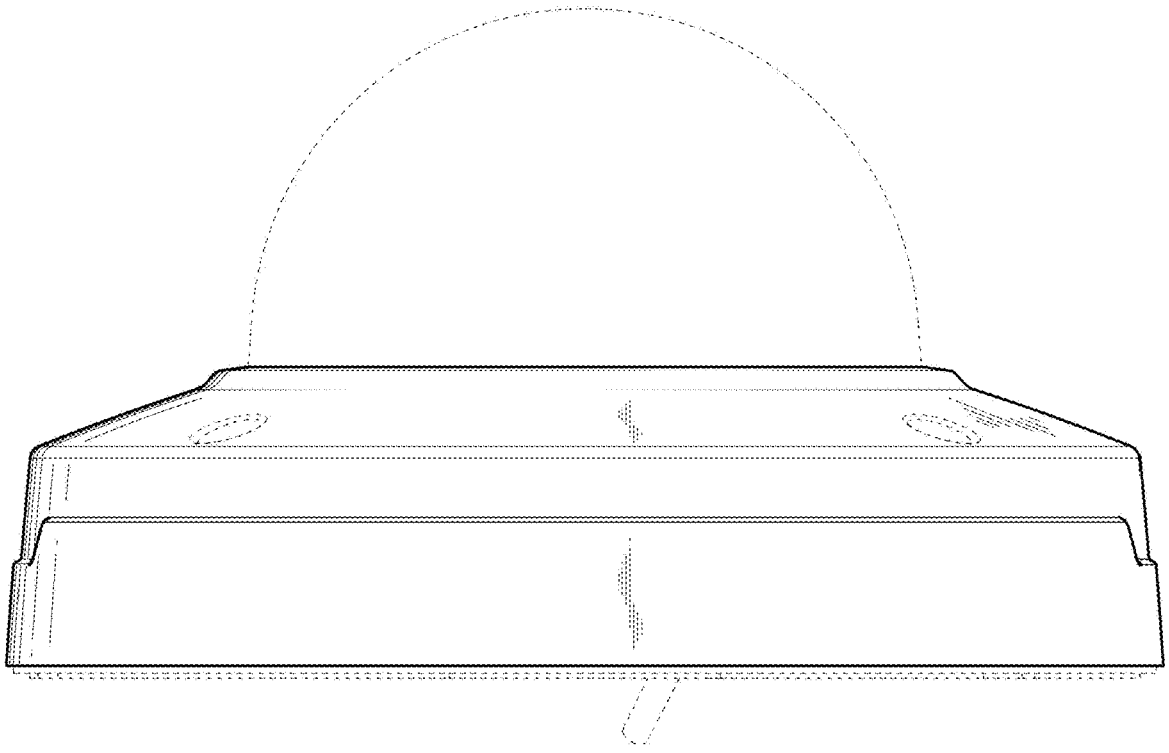

FIG. 5

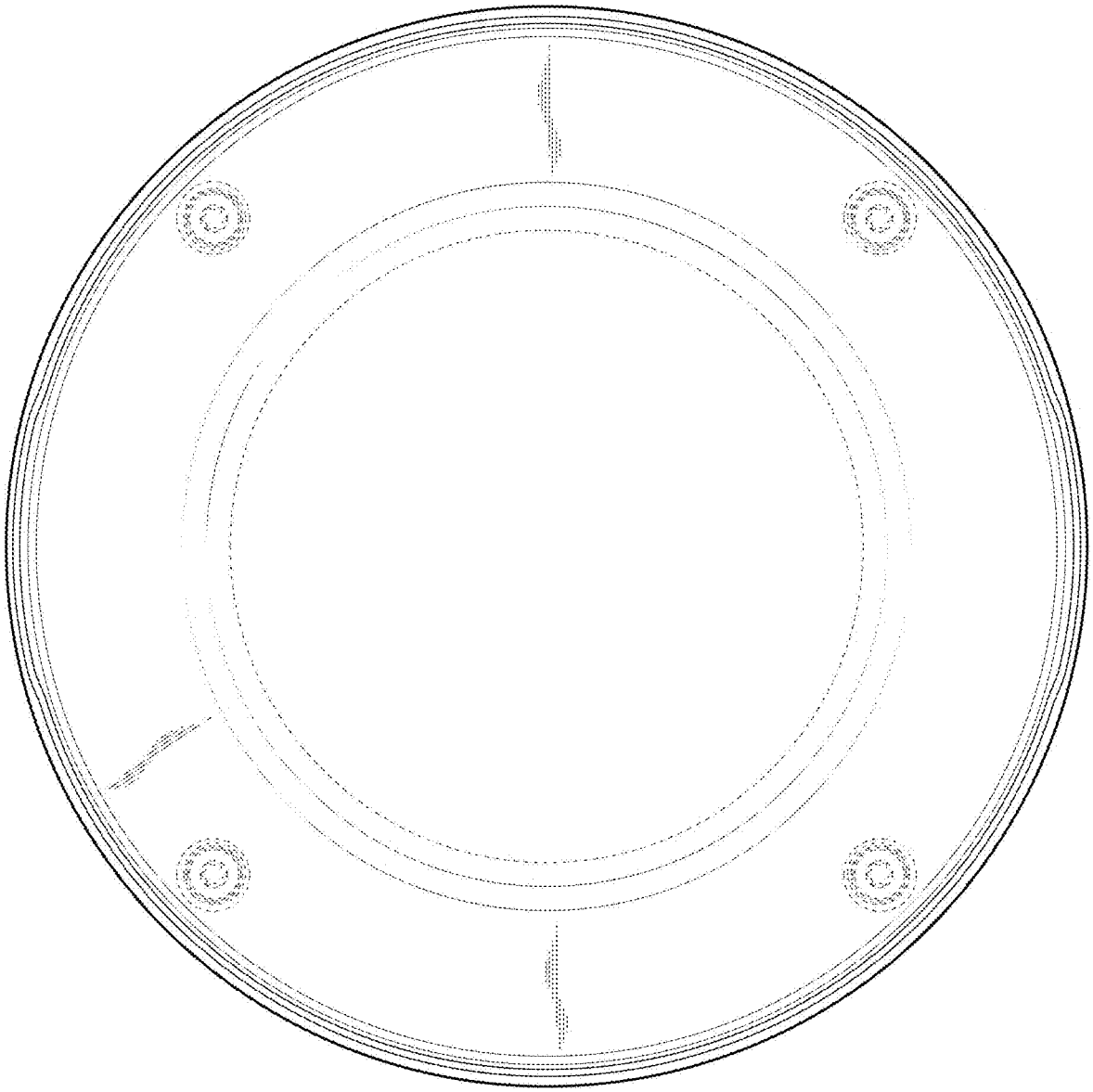

FIG. 6

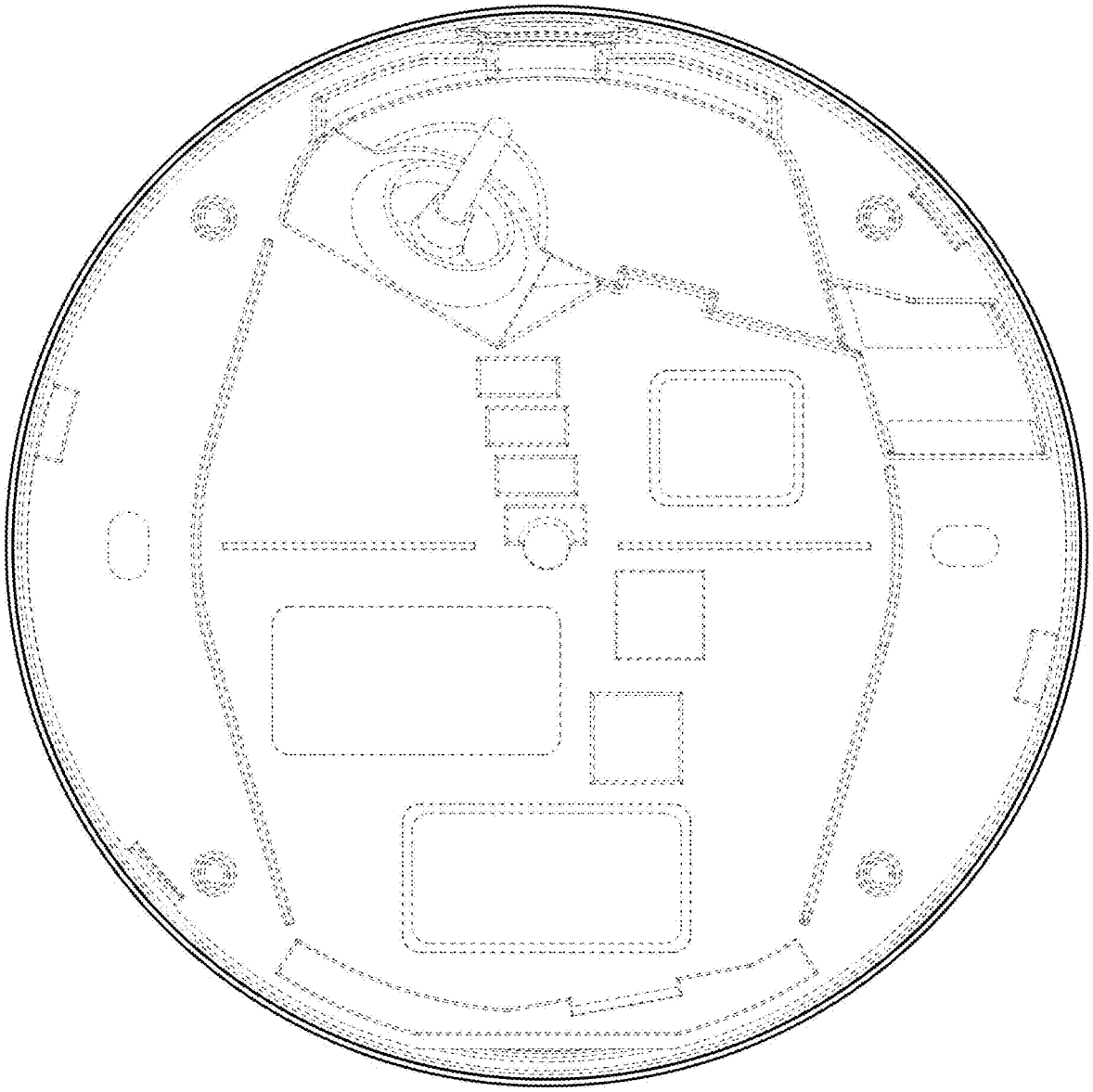

FIG. 7